ASME RTP-1–2019

(Revision of ASME RTP-1–2017)

Reinforced Thermoset Plastic Corrosion-Resistant Equipment

ASMENORMDOC.COM : Click to view the full PDF of ASME RTP-1 2019

AN AMERICAN NATIONAL STANDARD

The American Society of Mechanical Engineers

ASME RTP-1–2019
(Revision of ASME RTP-1–2017)

Reinforced Thermoset Plastic Corrosion-Resistant Equipment

ASMENORMDOC.COM : Click to view the full PDF of ASME RTP-1 2019

AN AMERICAN NATIONAL STANDARD

The American Society of Mechanical Engineers
Two Park Avenue • New York, NY • 10016 USA

Date of Issuance: December 31, 2019

The next edition of this Standard is scheduled for publication in 2021. This Standard will become effective 6 months after the Date of Issuance.

ASME issues written replies to inquiries concerning interpretations of technical aspects ofthis Standard. Periodically certain actions of the ASME RTP Committee may be published as Cases.Cases and interpretations are published on the ASME website under the Committee Pages at http://cstools.asme.org/ as they are issued.

Errata to codes and standards may be posted on the ASME website under the Committee Pages to provide corrections to incorrectly published items, or to correct typographical or grammatical errors in codes and standards. Such errata shall be used on the date posted.

The Committee Pages can be found at http://cstools.asme.org/. There is an option available to automatically receive an e-mail notification when errata are posted to a particular code or standard. This option can be found on the appropriate Committee Page after selecting “Errata” in the “Publication Information” section.

ASME is the registered trademark of The American Society of Mechanical Engineers.

This code or standard was developed under procedures accredited as meeting the criteria for American National Standards. The Standards Committee that approved the code or standard was balanced to assure that individuals from competent and concerned interests have had an opportunity to participate. The proposed code or standard was made available for public review and comment that provides an opportunity for additional public input from industry, academia, regulatory agencies, and the public-at-large.

ASME does not “approve,” “rate,” or “endorse” any item, construction, proprietary device, or activity.

ASME does not take any position with respect to the validity of any patent rights asserted in connection with any items mentioned in this document, and does not undertake to insure anyone utilizing a standard against liability for infringement of any applicable letters patent, nor assume any such liability. Users of a code or standard are expressly advised that determination of the validity of any such patent rights, and the risk of infringement of such rights, is entirely their own responsibility.

Participation by federal agency representative(s) or person(s) affiliated with industry is not to be interpreted as government or industry endorsement of this code or standard.

ASME accepts responsibility for only those interpretations of this document issued in accordance with the established ASME procedures and policies, which precludes the issuance of interpretations by individuals.

No part of this document may be reproduced in any form,
in an electronic retrieval system or otherwise,
without the prior written permission of the publisher.

The American Society of Mechanical Engineers
Two Park Avenue, New York, NY 10016-5990

Copyright © 2019 by
THE AMERICAN SOCIETY OF MECHANICAL ENGINEERS
All rights reserved
Printed in U.S.A.

ASMENORMDOC.COM : Click to view the full PDF of ASME RTP-1 2019

CONTENTS

Foreword . . . xi

Statement of Policy on the Use of Certification Marks and Code Authorization in Advertising . . . xii

Committee Roster . . . xiii

Introduction . . . xv

Summary of Changes . . . xvi

Part 1 **General Requirements** . . . 1
1-100 Introduction . . . 1
1-200 User's Basic Requirements Specification . . . 1
1-300 Fabricator's Design Report . . . 3
1-400 Inspection . . . 3
1-500 Fabricator's Quality Control Program . . . 8
Part 2 **Materials** . . . 13
2-100 Scope . . . 13
2-200 Laminate Compositions . . . 13
2-300 Materials . . . 13
Subpart 2A **Requirements for Representative Flat Laminates** . . . 14
2A-100 Introduction . . . 14
2A-200 Laminate Requirements . . . 14
2A-300 Requirements for Physical and Mechanical Properties . . . 15
2A-400 Test Methods . . . 17
2A-500 Records . . . 17
2A-600 Additional Standard Laminate Compositions for Subpart 2A . . . 17
Subpart 2B **Requirements for Laminates Developed Using the Lamination Analysis Method (Type X)** 18
2B-100 Laminate Composition . . . 18
2B-200 Requirements for Physical and Mechanical Properties . . . 18
2B-300 Test Methods . . . 18
2B-400 Records . . . 18
Subpart 2C **Permissible Tolerances for Laminate Thickness Variation** . . . 19
2C-100 Tolerance for Average Spot Thickness . . . 19
2C-200 Tolerance for Average Thickness of a Major Part . . . 19
2C-300 Exceptions and Adjustments . . . 19
Part 3 **Design** . . . 20
3-100 Scope . . . 20
3-200 General . . . 20
3-300 Definitions and Related Requirements . . . 20
Subpart 3A **Design by Rules** . . . 21
3A-100 Loadings . . . 21
3A-200 Design for Total Internal Pressure . . . 23

ASMENORMDOC.COM : Click to view the full PDF of ASME RTP-1 2019

3A-300	Design for External Pressure	26
3A-400	Seismic, Wind, and Snow Loadings	28
3A-500	Large Diameter RTP Equipment Body Flanges	30
3A-600	Vessels Supported by Shell Attachments	30
3A-700	Reinforcement of Circular Openings	30
3A-800	Secondary Bond Shear Stress	31
Subpart 3B	**Design by Stress Analysis**	31
3B-100	Introduction	31
3B-200	Design Acceptability	31
3B-300	Loading	32
3B-400	Design	33
3B-500	Stress Criteria	33
3B-600	External Pressure	33
3B-700	Attachments	34
Part 4	**Fabrication**	35
4-100	Scope	35
4-200	Large Diameter Body Flanges	35
4-300	Shell Joints	35
4-400	Flanged Nozzles	36
4-500	Manways	37
4-600	Reinforcement of Cutouts	37
4-700	Tolerances	37
4-800	Balsa Wood Cored Plates	37
Part 5	**Overpressure Protection**	55
5-100	Basis for Design	55
5-200	Protection Against Overpressure	55
5-300	Type of Overpressure Protection	55
5-400	Location of Overpressure Protection Devices	55
5-500	Installation Practices	55
5-600	Overpressure Device Set Pressure	55
5-700	Relief Device Sizing	55
5-800	Discharge Lines From Pressure Relief Devices	55
5-900	Responsibility for Design and Selection	56
Part 6	**Inspection and Tests**	57
6-100	Scope	57
6-200	Inspector	57
6-300	Inspection and Responsibility	57
6-400	Conditions for Inspection	58
6-500	Equipment Design	58
6-600	Materials	58
6-700	Fabrication	58
6-800	Fabricator's Quality Assurance Program	58
6-900	Final Inspection	58
Part 7	**Shop Qualification**	66
7-100	Scope	66

ASMENORMDOC.COM : Click to view the full PDF of ASME RTP-1 2019

7-200 General . . . 66
7-300 Fabricator's Facilities and Equipment . . . 66
7-400 Personnel . . . 66
7-500 Quality Control Program, Document Handling, and Record System . . . 66
7-600 Demonstration of Capability (Demonstration Laminates) . . . 66
7-700 Minimum Test Values From Demonstration Laminates . . . 68
7-800 Demonstration Vessel . . . 69
7-900 Identifying Demonstration Laminates . . . 69
7-1000 Laboratory Test and Test Report Requirements for Demonstration Laminates . . . 69
Part 8 Certification . . . 72
8-100 Scope . . . 72
8-200 General . . . 72
8-300 Certification Process . . . 72
8-400 ASME RTP-1 Certificate of Authorization Holder . . . 72
8-500 Issuance of Certification . . . 72
8-600 Designated Oversight . . . 73
8-700 Data Reports . . . 73
8-800 ASME RTP Certified Mark and Certified Designator . . . 73

Mandatory Appendices
M-1 Reinforcement Materials Receiving Procedures . . . 75
M-2 Matrix Materials Receiving Procedures . . . 85
M-3 Calculations Using the Classical Lamination Theory (CLT) Analysis Method . . . 92
M-4 Quality Control Program . . . 120
M-5 Qualification of Laminators and Secondary Bonders . . . 122
M-6 Demonstration Vessel . . . 129
M-7 Repair Procedures . . . 138
M-8 Acoustic Emission Examination . . . 143
M-9 Glossary . . . 145
M-10 Reference Documents . . . 149
M-11 Submittal of Technical Inquiries to the Reinforced Thermoset Plastic Corrosion-Resistant Equipment Committee . . . 152
M-12 Dual Laminate Vessels . . . 154
M-13 Balsa Wood Receiving and Inspection Procedures . . . 190

Nonmandatory Appendices
NM-1 Design Examples . . . 192
NM-2 Design of Integral Body Flanges . . . 211
NM-3 Seismic, Wind, and Snow Loadings . . . 229
NM-4 Hold-Down Lug Design . . . 236
NM-5 Ring Support of Vessels . . . 246
NM-6 Example of a Fabricator's Quality Control Program . . . 259
NM-7 Acceptance Inspection by User's Inspector . . . 273
NM-8 Handling and Shipping . . . 280
NM-9 Installation of RTP Vessels . . . 283

ASMENORMDOC.COM : Click to view the full PDF of ASME RTP-1 2019

NM-10 Requirements and Responsibilities of User (or User's Agent), Fabricator, Inspector, and Certified Individual . . . 286
NM-11 Design for 250-lb Concentrated Load on a Torispherical Head . . . 290
NM-12 FRP Flange Design . . . 292
NM-13 Stress Analysis Methods . . . 296
NM-15 Flat Cored Plate Design . . . 321
NM-16 External Pressure Design Example for Cylindrical Shells . . . 324
NM-17 Stiffener Design Calculations . . . 327

Figures

3-1 Toriconical Head Dimensions . . . 24
3-2 Toriconical Head Dimensions for External Pressure . . . 29
4-1 Torispherical Heads . . . 38
4-2 Flat-Bottom Tank Knuckle Detail . . . 39
4-3 Joint Arrangement . . . 41
4-4 Flush Nozzle Installation . . . 42
4-5 Penetrating Nozzle Installation . . . 43
4-6 Bottom Drain Detail . . . 44
4-7 Stiffener Details for Half-Round, Trapezoidal, and Filament Wound Band Configurations . 45
4-8 Support Skirt Attachment Detail . . . 46
4-9 Fabrication Tolerances . . . 47
4-10(a) Nozzle Flange Dimensions for Class 150 Bolting (U.S. Customary Units) . . . 48
4-10(b) Nozzle Flange Dimensions for Class 150 Bolting (SI Units) . . . 49
4-11 Flanged Nozzle Lay-Up Method . . . 50
4-12 Nozzle Installation and Cutout Reinforcement Location Alternate . . . 51
4-13 Nozzle Gussets . . . 52
4-14 Flange Tolerances . . . 53
4-15 Flat Cored Bottom Knuckle Detail . . . 53
7-1 Dimensions for Tensile Test Specimen . . . 71
8-1 Official ASME Certification Mark With RTP Designator . . . 73
M3-1 Moment Resultants . . . 92
M3-2 Force Resultants . . . 93
M3-3 Geometry and Notation of an ***n***-Layered Laminate . . . 94
M3-4 Coordinate Systems . . . 94
M5-1 Pipe Test Piece . . . 126
M5-2 Secondary Bond Test Assembly . . . 126
M5-3 Secondary Bond Test Specimen . . . 127
M6-1 ASME RTP-1 Demonstration Vessel . . . 135
M6-2 Post-Test Sectioning of Vessel for Final Inspection and Display . . . 136
M6-3 Witness of Hydrotest of ASME RTP-1 Demonstration Vessel (Attachment No. 3) . . . 137
M12C-1 Support Ledges Showing Recommended Weld Locations Away From Thermoformed Bends 168
M12D-1 Maximum Offset Allowed for Joints Between Sheets With Different Thicknesses . . . 169
M12D-2 Visual Features of Hot Gas Welds . . . 171
M12D-3 Illustrations of Flow Lines . . . 172
M12D-4 Heat-Affected Zone Patterns . . . 172

ASMENORMDOC.COM: Click to view the full PDF of ASME RTP-1 2019

M12D-5 Butt Fusion Welds Showing Melt Flow Lines . . . 173
M12D-6 Nozzle Construction for Penetrating Nozzle . . . 175
M12D-7 Nozzle and Manway Construction and Installation . . . 176
M12D-8 Bottom Nozzle Construction and Installation . . . 178
M12G-1 Dual Laminate Demonstration Vessel . . . 181
M12G-2 Post-Test Sectioning of Dual Laminate Demonstration Vessel for Final Inspection and Display 186
NM1-1 Toriconical Head . . . 193
NM1-2 Stress Intensity in a Toriconical Head . . . 195
NM1-3 Horizontal Tank . . . 197
NM1-4 Pressure Distribution . . . 198
NM1-5 Saddle Reaction . . . 199
NM1-6 Stress Along Top Meridian, Initial Try . . . 200
NM1-7 Stress Along 45-deg Meridian, Initial Try . . . 201
NM1-8 Stress Along 90-deg Meridian, Initial Try . . . 202
NM1-9 Stress Along 135-deg Meridian, Initial Try . . . 203
NM1-10 Stress Along Bottom Meridian, Initial Try . . . 204
NM1-11 Stress Along Top Meridian, Final Try . . . 206
NM1-12 Stress Along 45-deg Meridian, Final Try . . . 207
NM1-13 Stress Along 90-deg Meridian, Final Try . . . 208
NM1-14 Stress Along 135-deg Meridian, Final Try . . . 209
NM1-15 Stress Along Bottom Meridian, Final Try . . . 210
NM2-1 Design of Flat-Face Integral Body Flanges With Full-Face Gaskets . . . 218
NM2-2 Values of F (Integral Flange Factors) . . . 219
NM2-3 Values of f (Hub Stress Correction Factors) . . . 220
NM2-4 Values of T, U, Y, and Z (Terms Involving K) . . . 221
NM2-5 Values of V (Integral Flange Factors) . . . 222
NM2-6 Design of Flat-Face Integral Body Flanges With Full-Face Gaskets (Example Calculation — 72-in. Flange at 30 psi) . . . 223
NM4-1 Wound-On Hold-Down Lug . . . 238
NM4-2A Secondary Bonded Hold-Down Lug, Type A . . . 239
NM4-2B Secondary Bonded Hold-Down Lug, Type B . . . 240
NM4-3 Moment Coefficient, M_L . . . 241
NM4-4 Uplift Coefficient, P_G . . . 241
NM4-5 Recommended Hold-Down Clip . . . 242
NM5-1 Lugs on Band . . . 248
NM5-2 Moment Coefficient, M_L . . . 249
NM5-3 Split-Ring Flange . . . 250
NM5-4 Ring Support of Vessels . . . 251
NM5-5 Geometric Quantities . . . 252
NM5-6 Ring Design Chart for Three Lugs . . . 254
NM5-7 Ring Design Chart for Four Lugs . . . 255
NM5-8 Ring Design Chart for Eight Lugs . . . 256
NM5-9 Example Cross Section . . . 257
NM5-10 Lug . . . 258
NM6-1 Organization Chart . . . 262

ASMENORMDOC.COM : Click to view the full PDF of ASME RTP-1 2019

NM7-1 Recommended Fabrication Tolerances . . . 278
NM8-1 Lifting Vessel With Spreader Bar . . . 280
NM8-2 Strongback for Lifting . . . 281
NM8-3 Use of Strongbacks . . . 282
NM9-1 Flat-Face Valve Flange to Flat-Face RTP Nozzle Flange and Full-Face Gasket . . . 283
NM9-2 Raised-Face Valve Flange to Flat-Face RTP Nozzle Flange With Filler Ring and Full-Face Gasket 284
NM9-3 Flange Bolt Tightening . . . 284
NM10-1 RTP-1 Flowchart . . . 289
NM11-1 Stress Function . . . 291
NM12-1 Flange Dimensioning Details . . . 292
NM12-2 Flange Loading Conditions . . . 293
NM13A-1 Sign Conventions for Cylindrical Segments . . . 315
NM13B-1 Sign Conventions for Spherical Segments . . . 316
NM13C-1 Sign Conventions for Flat Plates . . . 317
NM13C-2 Simply Supported Flat Plate . . . 317
NM13C-3 Edge Loads on Flat Plates . . . 317
NM13C-4 Flat Plate Vessel Head . . . 318
NM13C-5 Flat Plate to Cylinder Joint . . . 318
NM13D-1 Example Pressure Vessel . . . 318
NM13D-2 Forces and Moments in Pressure Vessel Example . . . 319
NM13D-3 Hemispherical Head . . . 319
NM13D-4 Cylindrical Shell . . . 319
NM13D-5 Flat Plate Head . . . 320
NM15-1 Equivalent Solid and Cored Plates . . . 322
NM17-1 Stiffener Moment of Inertia for a Half-Round . . . 327
NM17-2 Stiffener Moment of Inertia for a Trapezoidal Stiffener . . . 329
NM17-3 Stiffener Moment of Inertia for a Filament Wound Band . . . 331

Tables

2A-1 Standard Laminate Composition Type I . . . 15
2A-2 Standard Laminate Composition Type II . . . 16
2A-3 Minimum Values of Flat Laminates . . . 16
4-1 Flange Flatness Tolerance . . . 53
4-2 Typical Dimensions of Manways . . . 54
4-3 Shear Bond Length . . . 54
6-1 RTP Visual Inspection Acceptance Criteria . . . 63
7-1 Required Resins and Acceptable Fabrication Processes for Demonstration Laminates . . . 67
7-2 Dimensional Requirements for Hand Lay-Up and Spray-Up Demonstration Laminates . . . 68
7-3 Reinforcement Requirements for Hand Lay-Up and Spray-Up Demonstration Laminates . 69
M3-1 Properties for Materials in the Design Example . . . 110
M3-2 Lamina Input for CLT Calculations . . . 116
M3-3 Strains, Stresses, and Strength Ratios . . . 117
M3-4 Woven Roving Layer Modeled as a Balanced and Symmetric Three-Ply Laminate . . . 118
M6-1 User's Basic Requirements Specification (UBRS) (As Required by the Provisions of ASME RTP-1) . . . 131

ASMENORMDOC.COM : Click to view the full PDF of ASME RTP-1 2019

M8-1 Acceptance Criteria . . . 144
M12B-1 ASTM Specifications for Thermoplastic Polymers . . . 155
M12B-2 Typical Thermoplastic Polymer Properties . . . 156
M12B-4 Thermoplastic Sheet Visual Inspection Acceptance Criteria . . . 159
M12D-1 Visual Weld Defects . . . 170
M12E-1 Lining Visual Inspection Acceptance Criteria . . . 179
M12G-1 User's Basic Requirements Specification (UBRS) (As Required by the Provisions of ASME RTP-1) . . . 182
M12H-1 Weld Strength Requirements . . . 187
NM1-1 Example 1, Vessel With a Toriconical Lower Head . . . 196
NM1-2 Wall Thickness in a Horizontal Tank . . . 205
NM2-1 Typical Body Flange Dimensions and Recommended Bolt Torque Values for RTP Body Flanges 212
NM2-2 Body Flange Design Using Full-Face Gaskets, Maximum Stress Less Than 3,000 psi — Type II Laminates . . . 214
NM2-3 Body Flange Design Using Full-Face Gaskets, Maximum Stress Less Than 1,800 psi — Type I Laminates . . . 216
NM2-4 Values of *T, Z, Y,* and *U* (Factors Involving *K*) . . . 224
NM6-4 Document Distribution List . . . 268
NM6-5 Document Preparation and Distribution Responsibility . . . 269
NM13C-1 Multiplying Factors . . . 304
List of SI Units for Use With ASME RTP-1 . . . 333
Commonly Used Conversion Factors . . . 334

Forms

1-1 User's Basic Requirements Specification (UBRS) (As Required by the Provisions of ASME RTP-1) . . . 4
1-2 Fabricator's Data Report (As Required by the Provisions of ASME RTP-1) . . . 10
1-3 Fabricator's Partial Data Report . . . 12
M1A-1 Veil and Mat Reinforcement Log Sheet . . . 76
M1B-1 Roving Reinforcement Log Sheet . . . 78
M1C-1 Fabric Reinforcement Log Sheet . . . 80
M1D-1 Milled Fiber Reinforcement Log Sheet . . . 84
M2E-1 Resin Log Sheet . . . 89
M2E-2 Curing Agents Log Sheet . . . 90
M2F-1 Common Additives Log Sheet . . . 91
M5-1 Laminator Qualification Report . . . 124
M5-2 Secondary Bonder Qualification Report . . . 125
M12B-3 Thermoplastic Sheet or Roll Receiving Log . . . 158
M12B-5 Welding Material Receiving Log . . . 161
M12B-6 Bonding Resin Receiving Log . . . 162
M12B-7 Conductive Material Receiving Log . . . 164
M12B-8 Thermoplastic Shape Receiving Log . . . 166
M13-1 Balsa Wood Core Inspection Sheet . . . 191
NM6-1 Mixing Data Sheet . . . 265
NM6-2 Component Data Sheet . . . 266

ASMENORMDOC.COM : Click to view the full PDF of ASME RTP-1 2019

NM6-3 Document Control Sheet 267
NM6-6 Nonconformity Correction Report 270
NM6-7 QC Manual Master Revision List 272
NM7-1 RTP Equipment Inspection Requirements 274
NM7-2 Inspection Checklist for RTP Equipment 275

ASMENORMDOC.COM : Click to view the full PDF of ASME RTP-1 2019

FOREWORD

The function of the Reinforced Thermoset Plastic (RTP) Corrosion-Resistant Equipment Committee is to establish rules of safety governing the design, fabrication, and inspection during construction of such equipment, and to interpret these rules when questions arise regarding their intent. In formulating the rules, the Committee considers the needs of users, material manufacturers, fabricators, and inspectors of this equipment. The objective of the rules is to afford protection of life and property, and to provide a margin for deterioration in service so as to give a reasonably long safe period of usefulness. Advancements in design and material and the evidence of experience are recognized.

The rules established by the Committee are not to be interpreted as approving, recommending, or endorsing any proprietary or specific design or as limiting in any way the Fabricator's freedom to choose any method of design or any form of construction that conforms to the rules of this Standard.

This Standard contains mandatory requirements, specific prohibitions, and nonmandatory guidance for materials, design, fabrication, examination, inspection, testing, certification, and pressure-relief activities. This Standard does not address all aspects of these activities, and those aspects that are not specifically addressed should not be considered prohibited. This Standard is not a design handbook and cannot replace education, experience, and the use of engineering judgment. The phrase *engineering judgment* refers to technical judgments made by knowledgeable designers experienced in the application of this Standard. Engineering judgments must be consistent with the philosophy of this Standard, and such judgments must never be used to overrule mandatory requirements or specific prohibitions of this Standard.

The Committee meets regularly to consider requests for interpretations and revisions of the rules, and to develop new rules as dictated by technological development. Inquiries must be addressed to the Secretary in writing and must give full particulars in order to receive consideration and a written interpretation. Proposed revisions to this Standard resulting from inquiries will be presented to the Standards Committee for appropriate action.

Proposed revisions to this Standard approved by the Committee are submitted to the American National Standards Institute and published at *http://cstools.asme.org/csconnect/PublicReviewPage.cfm* to invite comments from all interested persons. After the allotted time for public review and final approval by ASME, revisions are published in updates to this Standard. They may be used beginning with the date of issuance. Revisions become mandatory as requirements 6 months after such date of issuance.

The first edition of this Standard was issued on December 31, 1989. The 2019 edition of this Standard contains revisions to the 2017 edition, including metrication of the Introduction, Parts 1 through 8, and Mandatory Appendices M-1 through M-13. The 2019 edition was approved by the American National Standards Institute on July 26, 2019.

Requests for interpretations or suggestions for revision should be sent to the Secretary, RTP Standards Committee, The American Society of Mechanical Engineers, Two Park Avenue, New York, NY 10016-5990.

ASMENORMDOC.COM : Click to view the full PDF of ASME RTP-1 2019

STATEMENT OF POLICY ON THE USE OF THE ASME SINGLE CERTIFICATION MARK AND CODE AUTHORIZATION IN ADVERTISING

(19)

ASME has established procedures to authorize qualified organizations to perform various activities in accordance with the requirements of the ASME Codes and Standards. It is the aim of the Society to provide recognition of organizations so authorized. An organization holding authorization to perform various activities in accordance with the requirements of the Codes and Standards may state this capability in its advertising literature.

Organizations that are authorized to use the ASME Single Certification Mark for marking items or constructions that have been constructed and inspected in compliance with ASME Codes and Standards are issued Certificates of Authorization. It is the aim of the Society to maintain the standing of the ASME Single Certification Mark for the benefit of the users, the enforcement jurisdictions, and the holders of the ASME Single Certification Mark who comply with all requirements.

Based on these objectives, the following policy has been established on the usage in advertising of facsimiles of the ASME Single Certification Mark, Certificates of Authorization, and references to Codes or Standards construction. The American Society of Mechanical Engineers does not "approve," "certify," "rate," or "endorse" any item, construction, or activity, and there shall be no statements or implications that might so indicate. An organization holding the ASME Single Certification Mark and/or a Certificate of Authorization may state in advertising literature that items, constructions, or activities "are built (produced or performed) or activities conducted in accordance with the requirements of the applicable ASME Code or Standard." An ASME corporate logo shall not be used by any organization other than ASME.

The ASME Single Certification Mark shall be used only for stamping and nameplates as specifically provided in the Code or Standard. However, facsimiles may be used for the purpose of fostering the use of such construction. Such usage may be by an association or a society, or by a holder of the ASME Single Certification Mark who may also use the facsimile in advertising to show that clearly specified items will carry the ASME Single Certification Mark.

STATEMENT OF POLICY ON THE USE OF ASME MARKING TO IDENTIFY MANUFACTURED ITEMS

(19)

The ASME Codes and Standards provide rules for the construction of various items. These include requirements for materials, design, fabrication, examination, inspection, and stamping. Items constructed in accordance with all of the applicable rules of ASME are identified with the ASME Single Certification Mark described in the governing Code or Standard.

Markings such as "ASME," "ASME Standard," or any other marking including "ASME" or the ASME Single Certification Mark shall not be used on any item that is not constructed in accordance with all of the applicable requirements of the Code or Standard.

Items shall not be described on ASME Data Report Forms nor on similar forms referring to ASME that tend to imply that all requirements have been met when, in fact, they have not been. Data Report Forms covering items not fully complying with ASME requirements should not refer to ASME or they should clearly identify all exceptions to the ASME requirements.

ASME's certification related to products means that the capability by the supplier to fulfill requirements in the applicable standard has been reviewed and accepted by ASME. The supplier is responsible for ensuring that products meet, and if applicable continue to meet, the requirements on which the certification is based. This shall be made clear on stampings, labels, or nameplate markings by inclusion of the words:

Certified by _____
(Manufacturer)

ASMENORMDOC.COM : Click to view the full PDF of ASME RTP-1 2019

ASME RTP COMMITTEE
Reinforced Thermoset Plastic Corrosion-Resistant Equipment

(The following is the roster of the Committee at the time of approval of this Standard.)

STANDARDS COMMITTEE OFFICERS

B. Hebb, *Chair*
P. D. Stumpf, *Secretary*

STANDARDS COMMITTEE PERSONNEL

M. W. Arthur, An-Cor Industrial Plastics, Inc.
F. L. Brown, Consultant
J. L. Bustillos, Bustillos & Associates, LLC
B. R. Colley, Ashland, LLC
T. W. Cowley, FRP Consulting, LLC
L. J. Craigie, Consultant
R. A. Crawford, Consultant
R. B. Davis, Ershigs, Inc.
J. Eisenman, Maverick Applied Science, Inc.
B. Hebb, RPS Composites, Inc.
W. F. Holtzclaw, Holtec, LLC
B. L. Hutton, Lubrizol
L. Hutton, Plasticwelding, LLC
D. Keeler, Dow Chemical Co.
B. M. Linnemann, RL Industries, Inc.
S. R. Linnemann, RL Industries, Inc.
D. H. McCauley, Chemours
M. B. McCoy, TQS Inspections, Inc.
D. S. Preston, LFM
J. M. Puthoff, Plas-Tanks Industries, Inc.
J. R. Richter, Sentinel Consulting, LLC
B. Shelley, AllSourcePPS (sponsored by Chemours)
S. Spahn, Composites One, LLC
P. D. Stumpf, The American Society of Mechanical Engineers
G. A. Van Beek, Southern Company Services
H. T. Wells, Albemarle Corp.
C. R. Green, *Contributing Member*, Fluor, Inc.
S. F. Harrison, Jr., *Contributing Member*, ASME Senior Nuclear Consultant
D. H. Hodgkinson, *Contributing Member*, Consultant
R. J. Lewandowski, *Contributing Member*, Consultant
O. W. Siebert, *Honorary Member*, Siebert Materials Engineering, Inc.

EXECUTIVE COMMITTEE

S. R. Linnemann, *Chair*, RL Industries, Inc.
B. Hebb, *Vice Chair*, RPS Composites, Inc.
F. L. Brown, Consultant
J. L. Bustillos, Bustillos & Associates, LLC
R. Davis, Ershigs, Inc.
B. L. Hutton, Lubrizol
D. Keeler, Dow Chemical Co.
B. M. Linnemann, RL Industries, Inc.
D. S. Preston, LFM
J. M. Puthoff, Plas-Tanks Industries, Inc.
T. Reeves, Jr., B & D Plastics, LLC
S. Spahn, Composites One, LLC

SUBCOMMITTEE ON DESIGN

D. S. Preston, *Chair*, LFM
J. L. Bustillos, *Vice Chair*, Bustillos & Associates, LLC
A. Anderson, Plas-Tanks Industries, Inc.
A. Bausman, VSP Technologies
A. Beckwith, Thorpe Plan Services, Inc.
P. W. Craven, Composites USA
B. Hebb, RPS Composites, Inc.
J. L. Kendall, RPS Composites, Inc.
D. Mikulec, Maverick Applied Science, Inc.
G. L. Patrick, Sr., Belding Tank Technologies
B. E. Riseborough, Replacom Engineering
B. Shelley, AllSourcePPS (sponsored by Chemours)
Z. Siveski, Bechtel Infrastructure & Power
K. M. Sweeney, An-Cor Industrial Plastics, Inc.
R. Vatovec, Consultant
R. Wacker, Inertech, Inc.
M. W. Arthur, *Contributing Member*, An-Cor Industrial Plastics, Inc.
C. R. Green, *Contributing Member*, Fluor, Inc.
D. H. Hodgkinson, *Contributing Member*, Consultant
A. L. Newberry, *Contributing Member*, Femech Engineering
R. W. Newbold, *Contributing Member*, RL Industries, Inc.
A. Springer, *Contributing Member*, Big West Oil
K. V. Rathnam, *Contributing Member*, Consultant

ASMENORMDOC.COM : Click to view the full PDF of ASME RTP-1 2019

SUBCOMMITTEE ON DUAL LAMINATES

T. Reeves, Jr., *Chair*, B & D Plastics, LLC
M. L. Krauss, *Vice Chair*, AGRU America
G. A. O'Brien, *Secretary,* Superior Dual Laminates, Inc.
M. W. Arthur, An-Cor Industrial Plastics, Inc.
B. L. Hutton, Lubrizol
L. Hutton, Plasticwelding, LLC
G. McCuaig, Superior Dual Laminates, Inc.
D. Naugle, Composites USA
J. Pace, Occidental Chemical Corp.
K. Raymond, Thorpe Plant Services, Inc.
L. L. Rieger, Dow Chemical Co.
T. C. Schoessel, Tri-Clor, Inc.
J. A. Thomas, Tri-Clor, Inc.
J. E. Vacek, Dow Chemical Co.
C. Winningham, Augusta Fiberglass
J. K. Argasinski, *Contributing Member*, Consultant
R. Moubarac, *Contributing Member*, Experco Composites, Inc.

SUBCOMMITTEE ON EDITORIAL

B. M. Linnemann, *Chair*, RL Industries, Inc.
R. B. Davis, Ershigs, Inc.
D. H. Hodgkinson, Consultant

SUBCOMMITTEE ON FABRICATION

J. M. Puthoff, *Chair*, Plas-Tanks Industries, Inc.
D. H. McCauley, *Vice Chair*, Chemours
R. A. Anderson, LF Manufacturing
B. Batts, Diamond Fiberglass
J. Criner, Thorpe Plant Services, Inc.
W. Daugherty, Beetle Plastics, LLC
J. Eisenman, Maverick Applied Science, Inc.
D. Keeler, Dow Chemical Co.
F. Z. Krmpotich, Sage Engineers
E. M. Short, Justin Tanks, LLC
S. L. Wagner, Finite Composites Consulting, LLC
E. Wesson, AOC Resins
W. P. Whitwell, Augusta Fiberglass Coatings, Inc.
A. Yuen, Ershigs, Inc.

SUBCOMMITTEE ON MATERIAL QUALITY ASSURANCE

S. Spahn, *Chair*, Composites One, LLC
M. B. McCoy, *Vice Chair*, TQS Inspections
B. M. Linnemann, *Secretary*, RL Industries, Inc.
M. Beneteau, Owens Corning
M. Berens, Plas-Tanks Industries, Inc.
S. Berner, QAISO, Inc.
D. S. Brown, Interplastic Corp.
F. L. Brown, Consultant
B. R. Colley, Ashland, LLC
T. W. Cowley, FRP Consulting, LLC
L. J. Craigie, Consultant
R. B. Davis, Ershigs, Inc.
D. Garcia, Xerxes Corp.
M. E. Guenat, Belco Manufacturing
T. E. Haber, Maverick Applied Science, Inc.
R. T. Hargrove, Ershigs, Inc.
W. F. Holtzclaw, Holtec, LLC
S. Hunt, Fibersurance, LLC
D. L. Mitchell, TQS Inspections, Inc.
J. Ness, AOC, LLC
G. L. Nicholson, Tri-Clor, Inc.
J. R. Richter, Sentinel Consulting, LLC
K. J. Spoo, Owens Corning
R. J. Stadelman, Reichhold, Inc.
K. Staton, Thorpe Plant Services, Inc.
C. Tolles, Tri-Clor, Inc.
G. A. Van Beek, Southern Company Services
H. T. Wells, Albemarle Corp.
R. J. Stadelman, *Contributing Member*, Reichhold, Inc.

ASMENORMDOC.COM : Click to view the full PDF of ASME RTP-1 2019

INTRODUCTION

(19)

GENERAL

The use of reinforced thermoset plastic (RTP) vessels, with maximum allowable working pressure (MAWP) and maximum allowable external working pressure (MAEWP) not exceeding 15.0 psig (103 kPag) external and/or 15.0 psig (103 kPag) internal above any hydrostatic head, that contain corrosive and otherwise hazardous materials, dictates the need for rules and/or stress analysis concerning materials of construction, design, fabrication, quality control, and inspection of such equipment. In developing rules for RTP, the Committee has adapted the principles of rules included in Section VIII, Division 1 of the ASME Boiler and Pressure Vessel Code, wherever they are applicable.

Adaption of standard rules to RTP requires recognition of differences that exist between metallic materials and RTP. These differences are addressed in the remainder of this Introduction.

MATERIALS AND ASSEMBLY

In the absence of ASTM standards, RTP laminate specifications (Part 2) have been developed for use with this ASME Standard. These specifications include laminate composition and properties. Laminates (composites) manufactured by contact molding and by filament winding are covered.

These materials of construction are not available in commerce as mill shapes such as sheet and plate for forming and joining by the Fabricator. They are produced in situ on a mandrel or mold by the Fabricator during fabrication of RTP equipment components. Each Fabricator, as part of his or her shop qualification to this Standard, must demonstrate capability to produce laminates meeting the requirements of the laminate specifications.

Assembly of components such as shells, heads, and nozzles requires joining by secondary bonding. This operation involves fit-up, surface preparation, and overwrapping with a laminate of composition equivalent to the laminates being joined. Secondary Bonders must be qualified individually by the procedures detailed in Mandatory Appendix M-5.

DESIGN

Design by formulas and by stress analysis are both included in this Standard. Consideration is given both to ultimate strength and to limiting strain. Time and temperature dependence of RTP laminate properties are recognized.

The ultimate stress consideration is required to ensure safety against catastrophic failure over a reasonably long term. The design factors of Subparts 3A and 3B include consideration of variability of quality in the labor-intensive fabricating operation. The strain considerations are required to ensure long-term operation under cyclic stress (fatigue) without cracking the resin matrix of the composite laminate, thus maintaining maximum corrosion resistance. More than 20 years of successful experience, together with test data, have shown these considerations to be valid.

INSPECTION

Reliance is placed on careful auditing of the Fabricator's Quality Control Program and close visual inspection of equipment during fabrication and of finished equipment.

NONMANDATORY APPENDICES

Nonmandatory Appendices are provided in this Standard for reference only. The content of Nonmandatory Appendices is not a requirement even when referenced in mandatory parts of this Standard.

UNITS

Either U.S. Customary Units or SI Units may be used to demonstrate compliance with the requirements of this Standard. It is not permissible to use a combination of both systems of units. Values are listed in the Standard with U.S. Customary Units as the primary units and with SI Units shown parenthetically. The SI Units values have been converted from the U.S. Customary Units values. Conversion of units shall be performed to ensure that dimensional consistency is maintained. For either system of units, the Qualified Designer is responsible for ensuring that all units are consistent and correct.

A supplement to the Standard is included as a convenience to the user to provide typical SI Units and commonly used conversion factors. Additional conversion factors are available in IEEE/ASTM SI 10.

ASMENORMDOC.COM : Click to view the full PDF of ASME RTP-1 2019

ASME RTP-1–2019
SUMMARY OF CHANGES

Following approval by the ASME Committee and ASME, and after public review, ASME RTP-1–2019 was approved by the American National Standards Institute on July 26, 2019.

In ASME RTP-1–2019, SI units have been added in the Introduction, Parts 1 through 8, and Mandatory Appendices M1 through M13. In addition, the edition includes the following changes identified by a margin note, **(19)**.

Page	*Location*	*Change*
xii	Statement of Policy on the Use of the ASME Single Certification Mark and Code Authorization in Advertising	Revised
xii	Statement of Policy on the Use of ASME Marking to Identify Manufactured Items	Revised
xv	Introduction	"Units" paragraph added
1	1-200	Revised
4	Form 1-1	(1) Formerly Table 1-1, redesignated (2) Items 3.2 and 5.1 revised (3) Item 5.7 added
3	1-230	Added
3	1-300	Revised
3	1-400	Revised
8	1-520	Subparagraph (c) revised
10	Form 1-2	(1) Formerly Table 1-2, redesignated (2) General Note (a)(2) revised
12	Form 1-3	(1) Formerly Table 1-3, redesignated (2) General Note (a)(1) revised
15	2A-300	(1) Subparagraph (a) revised (2) Subparagraph (a)(3) added
20	3-100	Subparagraph (b) revised
20	3-300	(1) Title revised (2) Definitions of *design temperature*, *intermittent loads*, and *sustained loads* revised
22	3A-130	Subparagraph (c) added
26	3A-261	Subparagraph (e) revised
28	3A-350	Subparagraph (a) revised
28	3A-410	Revised
30	3A-500	Revised
31	3A-730	Subparagraph (e) revised
31	3B-100	Revised
35	4-110	Revised

ASMENORMDOC.COM : Click to view the full PDF of ASME RTP-1 2019

Page	*Location*	*Change*
35	4-115	Added
35	4-320	Subparagraph (g) revised
44	Figure 4-6	"6:1 taper typ." callout revised to "Taper (typ.)," and General Note (a) revised
46	Figure 4-8	General Note (a) revised
48	Figure 4-10(a)	Formerly Figure 4-10, revised and redesignated
49	Figure 4-10(b)	Added
54	Table 4-2	Revised
58	6-500	Revised
60	6-930	(1) Subparagraph (d)(1)(-a) added and subsequent subparagraph redesignated
		(2) Subparagraph (d)(2) revised
61	6-950	Subparagraph (d) revised
63	Table 6-1	(1) In first column, "Wet blisters" revised to "Blisters," and related entries in second and last columns revised
		(2) Notes for "Wet-out" and "Maximum % repairs" revised
66	7-600	Subparagraphs (g) and (h) revised
67	Table 7-1	General Note (a) revised
67	7-610	Subparagraph (b) revised
68	Table 7-2	Req. Nos. (1) and (5) revised
69	Table 7-3	General Note (a) and Note (1) revised
68	7-620	Subparagraphs (a) and (b) revised
69	7-1000	First sentence and subparas. (a)(2) and (c)(2) revised
76	Form M1A-1	Formerly Table M1A-1, redesignated
77	M1A-430	Title revised
78	Form M1B-1	Formerly Table M1B-1, redesignated
80	Form M1C-1	Formerly Table M1C-1, redesignated
82	M1D-200	Last paragraph added
84	Form M1D-1	Formerly Table M1D-1, redesignated
85	M2-200	Revised
89	Form M2E-1	Formerly Table M2E-1, redesignated
90	Form M2E-2	Formerly Table M2E-2, redesignated
91	Form M2F-1	Formerly Table M2F-1, redesignated
93	M3-200	Revised
101	M3-330	Revised
104	M3-400	Revised
107	M3-510	Revised
109	M3-600	Revised in its entirety
110	Table M3-1	Revised
116	Table M3-2	Revised
117	Table M3-3	Revised
118	Table M3-4	Revised
120	M4-300	Subparagraphs (a) and (c) revised
122	M5-100	Subparagraphs (b) and (c) revised
124	Form M5-1	Formerly Table M5-1, redesignated

ASMENORMDOC.COM : Click to view the full PDF of ASME RTP-1 2019

Page	*Location*	*Change*
125	Form M5-2	Formerly Table M5-2, redesignated
131	Table M6-1	Item 2 revised
135	Figure M6-1	Revised
137	Figure M6-3	Item (b) revised
138	M7-210	Subparagraph (c) revised
139	M7-500	Revised
140	M7-630	Revised
140	M7-642	Revised
141	M7-644	Subparagraph (d) revised
141	M7-663	Subparagraph (d) revised
145	Mandatory Appendix M-9	Definitions of *certify*, *quality assurance*, and *quality control* revised
154	M12B-200	Subparagraph (a) revised
155	M12B-600	Subparagraph (c) revised
156	Table M12B-2	Editorially reformatted
157	M12B-613.1	Subparagraph (a) revised
158	Form M12B-3	Formerly Table M12B-3, redesignated
160	M12B-632	Revised
161	Form M12B-5	Formerly Table M12B-5, redesignated
162	Form M12B-6	Formerly Table M12B-6, redesignated
164	Form M12B-7	Formerly Table M12B-7, redesignated
166	Form M12B-8	Formerly Table M12B-8, redesignated
169	M12D-420	Revised
173	M12D-510	Subparagraph (a) revised
175	Figure M12D-6	Revised
176	Figure M12D-7	Revised
178	Figure M12D-8	Revised
177	M12D-920	Revised
181	Figure M12G-1	Revised
187	M12H-400	Subparagraph (a) revised
191	Form M13-1	Formerly Table M13-1, redesignated
212	Table NM2-1	(1) Last column heading and General Note (a) revised
		(2) General Note (e) added
214	Table NM2-2	(1) Editorially reformatted
		(2) General Note (a) revised
216	Table NM2-3	(1) Editorially reformatted
		(2) General Note (a) revised, and former General Note (b) redesignated as Note (1)
229	NM3-100	Note revised
235	NM3-331	Revised
265	Form NM6-1	Formerly Table NM6-1, redesignated
266	Form NM6-2	Formerly Table NM6-2, redesignated
267	Form NM6-3	Formerly Table NM6-3, redesignated
270	Form NM6-6	Formerly Table NM6-6, revised and redesignated
272	Form NM6-7	Formerly Table NM6-7, redesignated

ASMENORMDOC.COM : Click to view the full PDF of ASME RTP-1 2019

Page	*Location*	*Change*
274	Form NM7-1	Formerly Table NM7-1, redesignated
275	Form NM7-2	Formerly Table NM7-2, redesignated
280	NM8-200	Subparagraph (c) revised
286	NM10-300	Revised
287	NM10-400	Revised
287	NM10-500	Revised
293	NM12-320	Subparagraphs (a) and (b) added
293	NM12-330	Subparagraphs (a) and (b) added
294	NM12-350	Revised
294	NM12-360	Revised
294	NM12-400	Revised
332	SI Units	First paragraph revised

ASMENORMDOC.COM : Click to view the full PDF of ASME RTP-1 2019

INTENTIONALLY LEFT BLANK

ASMENORMDOC.COM : Click to view the full PDF of ASME RTP-1 2019

Part 1
General Requirements

1-100 INTRODUCTION

Part 1 of this Standard defines the requirements that are applicable to all reinforced thermoset plastic corrosion resistant vessels fabricated to this Standard and shall be used in conjunction with the specific requirements in other Parts and Mandatory Appendices of this Standard.

1-110 Scope

(a) This Standard applies to stationary vessels used for the storage, accumulation, or processing of corrosive or other substances at pressures not exceeding 15.0 psig (103 kPag) external and/or 15.0 psig (103 kPag) internal above any hydrostatic head.

(b) In relation to the geometry of vessels, the scope of this Standard shall include the following:

(1) where external piping is to be connected to the vessel

(-a) the first threaded joint for screwed connections

(-b) the face of the first flange for bolted connections

(-c) the vessel side sealing surface for proprietary connections or fittings

(2) the vessel attachment joint when an attachment is made to either the external or internal surface of the vessel

(3) covers for vessel openings, such as manhole and handhole covers

(4) the vessel side sealing surface for proprietary fittings, such as gages and instruments, for which rules are not provided by this Standard

1-120 Exclusions

The following types of reinforced thermoset plastic equipment are excluded from the rules of this Standard:

(a) vessels with MAWP or MAEWP in excess of 15.0 psig (103 kPag)

(b) hoods, ducts, and stacks

(c) fans and blowers

(d) vessel internals such as entrainment separators, chevron blades, packing support plates, and liquid distribution plates

(e) pumps

(f) pipe or piping (see ASME B31.3)

(g) fully buried underground closed vessels

1-130 Application Limitations

Vessels specified, designed, fabricated, and certified by the Fabricator as conforming to this Standard shall be limited to the following pressure and temperature limits:

(a) *Maximum Internal Pressure* [1]

(1) *With Proof Test of As-Constructed Laminate*. The MAWP, measured at the top of the vessel, shall not be greater than 15.0 psig (103 kPag).

(2) *Without Proof Test of As-Constructed Laminate*. The MAWP shall not be greater than 2.0 psig (14 kPag).

(b) *Maximum External Pressure* [1]

(1) *With Proof Test of As-Constructed Laminate*. The MAEWP shall not be greater than 15.0 psig (103 kPag).

(2) *Without Proof Test of As-Constructed Laminate*. The MAEWP shall not be greater than 2.0 psig (14 kPag).

(c) *Temperature Limits*. The design temperature shall be limited to a value for which mechanical properties have been determined by the procedures in paras. 2A-300(b) and 2B-200(a), and the chemical resistance has been established by the material selection process identified in Form 1-1, item 3.

Operating temperatures to 180°F (82°C) maximum are commonly encountered and a large body of mechanical property and chemical resistance data exists to facilitate design. The design temperature shall not be less than the maximum operating temperature. See para. 3-300. Applications above 180°F (82°C) require that the designer recognizes and accounts for possible reduced mechanical properties at the elevated temperature and possibly decreasing mechanical properties with time as a consequence of thermal and chemical exposure. Such elevated temperature applications require special design attention, and consultation with the resin manufacturer is essential.

1-200 USER'S BASIC REQUIREMENTS SPECIFICATION (19)

It is the responsibility of the User, or an Agent acting on the User's behalf, who intends that a vessel be designed, constructed, inspected, tested, and certified to be in compliance with this Standard, to provide or cause to be provided for such vessel a User's Basic Requirements Specification (UBRS). The UBRS shall set forth the intended design conditions of the vessel to provide the

[1] Refer to para. 6-930(d) for Proof Test requirements.

ASMENORMDOC.COM : Click to view the full PDF of ASME RTP-1 2019

basis for design and shall identify the external environment to which the vessel will be exposed, the intended function of the vessel, mechanical loads imposed on the vessel, specific installation requirements, and specific codes and laws applicable at the location where the vessel will be installed. The User also shall specify within the UBRS the type of resin required or define the contents to which the vessel shall be exposed.

See Form 1-1 for User's Basic Requirements Specification.

1-210 Service Restrictions

(a) When a vessel is to be used in a *critical service,* it shall be the responsibility of the User or the User's designated Agent to declare such in the UBRS.

(b) This Standard provides generalized guidelines to help the User or User's Agent in determining when a vessel should be declared to be in *critical service.* However, the User or User's Agent has sole authority and responsibility for such declaration. Any such declaration made is not a function of the scope, requirements, or content of this Standard, or of any firm or individual (other than the User or User's Agent) involved in any part of the process of using or determining proper use of the Standard.

(c) *Critical service* should be declared when the operating environment complies with all of the following conditions specified in (1) through (4) or the condition specified in (5):

(1) MAWP or MAEWP for the vessel is equal to or exceeds ±5.0 psig (34 kPag) and

(2) vessel is located in close proximity to areas frequented by personnel on a regular basis such that abrupt failure of the vessel would be likely to threaten the life or health of personnel and

(3) substance contained in the vessel is of such nature that if abruptly released it could threaten the life or health of personnel and

(4) substance contained is known by the User or User's Agent to degrade the physical strength properties of the RTP laminate at an abnormally high rate or

(5) substance contained is known by the User to be an insidious and extremely poisonous gas or liquid of such a nature that a very small amount of the gas or of the vapor of the liquid mixed or unmixed with air is dangerous to life when inhaled, or of such a nature that a very small amount of the substance in contact with the body may be absorbed and cause a toxic reaction that is dangerous to life. By *insidious* is meant the substance is of such nature that exposure to the substance might result in a discomfort level not sufficient to warn of potentially severe and irreversible damage to an individual's health.

(d) Quantities in the system, concentrations, pressure, temperature, the nature of the environment, substance properties such as flammability and toxicity, and the potential for environmental pollution should also be considered by the User or User's Agent in order to determine whether a critical service should be declared.

1-220 Critical Service Requirements

(a) When a User or User's Agent has declared in the UBRS that a vessel is to be used in *critical service,* the following shall apply:

(1) Regardless of design pressure, all vessels declared to be in critical service shall be subjected to a Proof Test of the as-constructed laminate. Refer to para. 6-930(d).

(2) The vessel shall be specified, fabricated, and inspected to be in full compliance with Level 1, Critically Corrosion Resistant, visual inspection criteria as described in Table 6-1.

(3) Design factors for the physical strength properties of the laminate shall be at least 125% of those specified elsewhere in this Standard. Greater design factors may be warranted based on analysis of the expected design conditions and such factors as are outlined in para. 1-210(d). If so, they shall be specified by the User or User's Agent.

(4) Acoustic emission testing of RTP vessels has been found useful in identifying major defects. Its use as an additional verification of integrity for vessels to be used in critical service is optional.

(5) Postcure of critical service vessels is optional but should be given consideration. Postcure of RTP laminates is known to improve certain mechanical properties of the laminate and reduce residual styrene content, and may improve the corrosion resistance of the laminate. Other mechanical properties, such as elongation, may be reduced by postcure.

Consultations with the resin manufacturer and Fabricator should be conducted, and where postcure is to be employed, a specification defining procedures, methods, and a time–temperature program shall be specified by the User.

(b) Compared to steel, RTP materials have the following characteristics:

(1) the long-term effects of chemical and thermal degradation on mechanical properties are less well defined

(2) flammability

(3) limited impact resistance

(4) low ductility that could lead to abrupt rupture due to excess loading

(5) the long-term effects of creep are less well defined

(c) On the basis of (b) above, the following additional safeguards should be carefully considered:

(1) location of vessels

(2) guarding against physical damage and abuse

(3) fire protection

(4) prevention of excess loading imposed by attachments or auxiliary equipment

ASMENORMDOC.COM : Click to view the full PDF of ASME RTP-1 2019

(5) periodic structural and material inspections and tests

(19) **1-230 Operation and Environmental Factor**

(a) An operation and environmental factor may be specified to account for reduction in laminate properties during the design life.

BACKGROUND: There exist conditions that are not identified as severe service, but may require increased design factors to achieve acceptable safety and reasonable service life. The end user is advised to research each unique application, design, and construction to determine if increased design factors are needed to satisfy their safety and service life requirement. Some chemical services have been identified that result in more rapid deterioration of laminate properties (permeation causing attack of reinforcement and resin) increasing risk of failures. Elevated temperatures and cyclic loading have also been shown to decrease service life.

(b) The operation and environmental factor is a multiplier that is applied to design factors and strength ratios for the physical strength properties of the laminate. This factor is in addition to any increase in design factors and strength ratios for the physical strength due to critical service. For example, an environmental factor of 1.33 requires that the design factors and strength ratios for the physical strength properties of the laminate be at least 133% of those specified elsewhere in this Standard.

(c) The operation and environmental factor must be greater than or equal to 1.0.

(d) It shall be the responsibility of the User or the User's designated Agent to declare an environmental factor in the UBRS.

(e) This Standard does not provide guidelines for determining the operation and environmental factor. The User or User's Agent has sole authority and responsibility for determining if an operation and environmental factor is required. Any operation and environmental factor specified is not a function of the scope, requirements, or content of this Standard, or of any firm or individual (other than the User or User's Agent) involved in any part of the process of using or determining proper use of the Standard.

(19) **1-300 FABRICATOR'S DESIGN REPORT**

The Fabricator or the Fabricator's designated agent shall prepare a Fabricator's Design Report, which includes the calculations, component and joint thicknesses, and laminate sequences necessary to establish that the design complies with the rules of this Standard and the UBRS.

The RTP-1 Qualified Designer qualified in accordance with para. 1-310 shall be in responsible charge of preparing all aspects of the Fabricator's Design Report and shall certify with his signature that the Fabricator's Design Report is in compliance with these rules and the UBRS.

1-310 Qualifications of the RTP-1 Qualified Designer

The RTP-1 Qualified Designer is the person(s) in direct charge of performing the engineering design of an RTP-1 certified tank and shall be experienced in the use of this Standard. The qualifications and experience required of the RTP-1 Qualified Designer will depend on the complexity and criticality of the system and the nature of the individual's experience. As a minimum the individual shall have all of the following qualifications:

(a) Completion of an engineering degree, accredited by an independent agency [such as ABET (US and international), NBA (India), CTI (France), and CNAP (Chile)], requiring the equivalent of at least 4 yr of study that provides exposure to fundamental subject matter relevant to the design of tanks and pressure vessels, plus a minimum of 5 yr of experience in the design of related tanks and pressure vessels including design calculations for pressure, sustained and occasional loads, and cyclic or thermal loading conditions.

(b) Professional Engineering registration in one or more of the states of the United States or provinces of Canada or alternatively recognized by a jurisdiction outside the United States or Canada.

At least 5 yr direct experience with design and fabrication including materials selection of FRP tanks and vessels using the RTP-1 Standard, ASME Boiler and Pressure Vessel Code, Section X, or EN 13121 or other recognized international fiberglass vessel or tank code or standard.

1-400 INSPECTION (19)

This Standard requires that specific inspections be carried out by Inspection Personnel experienced in the fabrication of RTP vessels. In addition, other inspections may be carried out as a part of the Fabricator's Quality Control Program. Throughout this Standard, Inspection Personnel are referred to as either inspector(s) (lowercase "i"), Inspector(s) (uppercase "I"), or Certified Individual(s) (uppercase "CI").

A *Certified Individual* is an employee of the Fabricator authorized by ASME to use its marks. The Certified Individual's principal responsibility is to protect the ASME mark by carrying out the duties described in this Standard. The Certified Individual may also be the Inspector.

An *Inspector* is an individual who shall be mutually acceptable to the User and Fabricator, and shall carry out duties in accordance with this Standard. An *Inspector's* reporting relationship to management shall be independent of the Fabricator's production and marketing groups (see para. 1-430). An Inspector may also be the Certified Individual or the inspector, but not both.

An *inspector* is an individual engaged in inspection activities during the course of fabrication, usually as a function of quality control. An Inspector may also be the Inspector but cannot be the Certified Individual.

ASMENORMDOC.COM : Click to view the full PDF of ASME RTP-1 2019

(19)

Form 1-1 User's Basic Requirements Specification (UBRS) (As Required by the Provisions of ASME RTP-1)

Page 1 of 4

RTP Edition No._____

UBRS Revision No._____

User firm name _____

User's Agent firm name _____

Title of equipment _____

User's designation no._____

Installation location (name and address) _____

_____

_____

UBRS prepared by (User or User's Agent):

Name _____ Phone no. _____ Date _____

Address _____

_____

_____

1. Equipment description (equipment sketch and nozzle schedule must be attached):

_____

_____

2. Additional Fabricator responsibilities:

[ ] Special requirements

[ ] Acoustic emission testing

[ ] Inspection or testing requirements not listed in the Standard _____

_____

_____

[ ] _____

[ ] _____

[ ] User waives visual inspection prior to application of final exterior coat: [ ] Yes [ ] No

[ ] Visual inspection acceptance level (refer to Table 6-1 of ASME RTP-1): [ ] Level 1 [ ] Level 2

Quantity limitations for gaseous air bubbles or blisters _____

_____

ASMENORMDOC.COM : Click to view the full PDF of ASME RTP-1 2019

Form 1-1 User's Basic Requirements Specification (UBRS) (As Required by the Provisions of ASME RTP-1) (Cont'd)

RTP Edition No._____

UBRS Revision No._____

[ ] Additional inspection aids/methods [refer to para. 6-940(c) of ASME RTP-1] _____

3. Material selection

3.1 Material selection by:

[ ] Resin manufacturer (include data per section 4 of this document)

[ ] Fabricator (include data per section 4 of this document)

[ ] End User. Applicable User's specifications/standards, codes, ordinances, FDA requirements, etc. (list and specify; attach copies of local code/ordinance requirements) _____

[ ] Other _____

3.2 Material of construction:

Resin _____ Catalyst/cure system _____

Veil _____ Barcol hardness per 6-910(b)(3) and 6-910(b)(4) _____

[ ] Lift lugs: [ ] RTP [ ] Carbon steel [ ] Other _____

[ ] Hold-down lugs: [ ] RTP [ ] Carbon steel [ ] Other _____

4. Chemical service data (shall be provided when Fabricator or resin manufacturer is making material selection) _____

4.1 Description of process function and process sequence: _____

4.2 Contents:

Chemical Name	Concentration Max. %	Concentration Min. %	Exposure Time

4.3 pH range: _____ max. _____ min.

5. Design

5.1 Design conditions:

	Operating (for reference only)	Design
Internal pressure		
External pressure		
Temperature		
Specific gravity		

	Normal (used for seismic design only)	Maximum
Liquid level		

ASMENORMDOC.COM : Click to view the full PDF of ASME RTP-1 2019

Form 1-1 User's Basic Requirements Specification (UBRS) (As Required by the Provisions of ASME RTP-1) (Cont'd)

Wind/seismic/snow code (include edition or year) _____
Basic wind speed _____ MPH (m/s) Classification category_____ Exposure_____
Elevation above grade_____ ft (m) Topographic factors _____
Latitude _____ Longitude _____ Seismic Risk Category_____
Snow load _____ psf (kPa)
Capacities: Operating _____ gal (L) Flooded _____ gal (L)

5.2 Mechanical agitator: [ ] Required [ ] Not required
Dead load _____lb (N)
Static bending moment _____ft-lb (N·m)
Dynamic bending moment _____ft-lb (N·m)
Torque _____ft-lb (N·m)
Horsepower _____hp (W)
Impeller speed _____RPM Impeller diameter _____in. (mm)
Number of impellers_____ Foot bearing: [ ] Yes [ ] No

5.3 Heating and cooling:
[ ] Electric panels
[ ] Steam coil
[ ] Steam sparger
[ ] Heat exchanger
[ ] Other _____

5.4 Mechanical and other forces:
[ ] Violent chemical reaction
[ ] Subsurface introduction of gas or vapor
[ ] Subsurface introduction of steam
[ ] Transmitted mechanical load/force
[ ] Impact due to introduction of solids
[ ] Vacuum from pump down (or vessel draining)
[ ] Vacuum from cool down
[ ] Other _____

5.5 Corrosion barrier excluded from structural calculations:
[ ] Yes
[ ] No

5.6 Declaration of *critical service* (only by User or User's Agent; refer to para. 1-210 of ASME RTP-1):
[ ] Yes
[ ] No

5.7 Operation and Environmental Factor (must be greater than or equal to 1.0): _____

6. Designation of Inspector (Review paras. 1-400, 1-430, and 1-440 of ASME RTP-1. It shall be noted that ASME RTP-1 establishes numerous duties for the Inspector, which necessitates that the Inspector be present in the fabrication shop throughout a major portion of the fabrication interval.). Inspector shall be:
[ ] Fabricator's Quality Control principal
[ ] User's representative
[ ] Other

ASMENORMDOC.COM : Click to view the full PDF of ASME RTP-1 2019

Form 1-1 User's Basic Requirements Specification (UBRS) (As Required by the Provisions of ASME RTP-1) (Cont'd)

RTP Edition No._____

UBRS Revision No._____

Inspector's name _____ Telephone _____

Company _____

Address _____

_____

7. Approval of UBRS

7.1 Authorized User's representative:

Name _____ Title _____

Signature _____ Date _____

7.2 Authorized Fabricator's representative:

Name _____ Title _____

Signature _____ Date _____

Additional requirements: _____

GENERAL NOTE: This form may be reproduced and used without written permission from ASME if used for purposes other than republication.

ASMENORMDOC.COM : Click to view the full PDF of ASME RTP-1 2019

Arrangements for Inspection Personnel shall be resolved prior to the start of fabrication.

1-410 Duties of the Certified Individual

The Certified Individual shall

(a) perform an annual audit to verify that the Fabricator's Quality Assurance Program is current and in effective operation

(b) verify that the qualifications of the *Inspector* and *inspector* are in accordance with the Fabricator's Quality Assurance Program

(c) verify that corrective actions resulting from ASME audits are properly resolved

(d) verify that corrective actions taken to resolve vessel nonconformities are in accordance with the Fabricator's Quality Assurance Program

(e) verify that the responsibilities and activities of the Inspector are in accordance with the requirements of the Standard

(f) verify that vessels are manufactured by qualified Laminators and Secondary Bonders

(g) sign the Fabricator's Partial Data Report subsequent to completion of all inspections by the Inspector, in the case that only components are being produced

(h) approve by signing of the ASME Fabricator's Certificate of Compliance on the Fabricator's Data Report subsequent to completion of all inspections by the Inspector

1-420 Qualifications of the Certified Individual

The Certified Individual shall meet the following qualifications:

(a) education and experience (minimum of high school diploma and 5 yr of experience in the RTP corrosion resistance industry)

(b) demonstrated inspection ability to the Fabricator employing the Certified Individual

(c) satisfactory expertise and experience according to the complexity of the assignment

(d) knowledge of ASME RTP-1

(e) knowledge of Fabricator's Quality Assurance Program and shop procedure

(f) knowledge and ability to evaluate and monitor procedures and performance

(g) knowledge of keeping and maintaining records

1-430 Inspector's Duty

The Inspector shall make all the inspections necessary to verify that the requirements of this Standard and the Fabricator's Design Report have been met. The Inspector of the vessel does not have the duty of determining the completeness or correctness of the design calculations; however, the Inspector does have the duty of establishing that the Fabricator of the vessel has the UBRS and the Fabricator's Design Report on file, and that the requirements of para. 1-300 have been met.

1-440 Access for the Inspector

The Inspector shall be permitted free access, at all times while work on the vessel is being performed, to all parts of the Fabricator's shop that concern the fabrication of the vessel and to the site of field fabrication or erection during the period of field fabrication, erection, and testing. The Fabricator shall keep the Inspector informed of the progress of the work and shall notify the Inspector in advance when the vessel or materials will be ready for any required tests or inspection.

1-500 FABRICATOR'S QUALITY CONTROL PROGRAM

A written description of the Quality Control Program, that explains which documents and procedures the Fabricator will use to produce equipment to this Standard, shall be available for review. The Quality Control Program shall be in accordance with the requirements of Mandatory Appendix M-4. See Nonmandatory Appendix NM-6 for an example of a Fabricator's Quality Control Program.

1-510 Fabricator's Demonstration of Capability

See Part 7.

1-520 Certification (19)

(a) In order for any vessel to be marked with the ASME Certification Mark with RTP Designator, the Fabricator shall meet the requirements of ASME CA-1 (refer to Part 8). The Fabricator has the responsibility of complying with all the requirements of this Standard and the UBRS. The Fabricator also has the responsibility to certify that any work done by others also complies with all the requirements of this Standard. This responsibility includes providing the Inspector with all required information and assuring that the detailed examinations and tests are performed at the stages of fabrication that permit them to be meaningful.

(b) The Certified Individual, subsequent to completion of all inspections by the Inspector (see Part 6), shall complete and sign the Fabricator's Data Report or Fabricator's Partial Data Report as applicable. See Forms 1-2 and 1-3. An original document of such Data Reports shall be sent or delivered to the User (or User's Agent). Copies of such Data Reports shall be retained in the Fabricator's record system in accordance with Mandatory Appendix M-4, para. M4-300(c).

(c) The Inspector shall sign the Inspector's Certification on the Fabricator's Data Report (or Partial Data Report) only when the Inspector is satisfied that all requirements of this Standard have been met.

ASMENORMDOC.COM : Click to view the full PDF of ASME RTP-1 2019

(d) Vessels may also be registered by filing the Fabricator's Data Report with the National Board of Boiler and Pressure Vessel Inspectors, 1055 Crupper Avenue, Columbus, OH 43229.

ASMENORMDOC.COM : Click to view the full PDF of ASME RTP-1 2019

(19)

Form 1-2 Fabricator's Data Report
(As Required by the Provisions of ASME RTP-1)

1. Fabricated and certified by: _____
(name and address of Fabricator)

2. Fabricated for: _____
(name and address of Purchaser)

3. Location of installation: _____
(name and address)

4. Type: _____ Vessel no.: _____ _____ _____ Year built: _____
(horiz. or vert. vessel) (mfr's. serial) (dwg. no.) (Nat'l Bd. no.)

5. Vessel fabricated in accordance with UBRS rev.: _____ ASME RTP-1 edition: _____
(rev. and date)

6. Vessel designed according to Part 3A or 3B: _____ Data pkg. and Design Report complete: _____
(indicate A or B or combination)

7. Laminate proof tests performed per para. 1-130: _____ . If yes, results reviewed and accepted: _____
(yes/no) (yes/no)

8. Fabricated for the following: Contents specific gravity: _____

Maximum allowable working pressure (specify units): _____ at maximum temp. (specify units): _____

Maximum allowable external working pressure (specify units): _____ at maximum temp. (specify units): _____

NDE: _____ Liner visual acceptance level: _____ Struct. visual acceptance level: _____
(AE or other) (Table 6-1, Level 1 or 2) (Table 6-1, Level 1 or 2)

Quantity limitations for gaseous air bubbles or blisters: _____

_____

9. Shell: Type: _____ Nom. thk.: _____ Liner: _____
(type I, type II, type X) (structural only) (specify veil, sequence, or type of thermoplastic and thk.)

Dia.: _____ Length: _____ Barcol hardness: _____
(specify units) (specify units) (min. and max. measured)

10. Heads: Type: _____ Liner: _____
(type I, type II, type X) (specify veil, sequence, or type of thermoplastic and thk.)

	Location (top, bottom, ends)	Nominal Thickness (structural only)	Barcol Hardness (min. and max. measured)	Shape (ASME F&D, 2:1 elliptical, flat)
(1)	_____	_____ (specify units)	_____	_____
(2)	_____	_____ (specify units)	_____	_____

11. Safety relief or atmospheric vent size and location: _____
(identify location, item designation, type, and size)

12. Inspection openings: _____
(describe size, quantity, and general location)

13. Vessel fabricated for storage of: _____
(briefly describe chemicals to be contained or stored)

Declaration of critical service: _____ Remarks: _____
(yes or no)

14. Supports: _____
(describe: if legs how many and size, if skirt describe, if support ring mat'l. and type, if saddles mat'l. and type)

15. Material selection: Resin (specific nomenclature & cure system): _____

_____ Resin manufacturer _____ Fabricator _____ End User

_____ Other (explain) _____

16. Fluid concentrations and temperatures as listed in the UBRS: _____

_____

ASMENORMDOC.COM : Click to view the full PDF of ASME RTP-1 2019

Form 1-2 Fabricator's Data Report (Cont'd)
(As Required by the Provisions of ASME RTP-1)

17. Nozzles/fittings:

Purpose/Use	Quantity	Size

FABRICATOR'S CERTIFICATE OF COMPLIANCE

We certify the information in this Data Report to be correct and that the vessel has been designed and fabricated in accordance with all requirements of ASME RTP-1 and the User's Basic Requirements Specification.

ASME RTP-1–_____ No._____
(Certificate of Authorization and expiration date)

Date _____ _____ _____
(month / day / year) (Fabricator's name) (signature of Certified Individual)

_____ _____
(print or type name)

_____

_____

_____
(address of fabrication site)

INSPECTOR'S CERTIFICATION

I, the undersigned, employed by _____ of _____,
(print company name) (city and state)

have inspected the vessel described in this Fabricator's Data Report and believe that the Fabricator has constructed it in accordance with the requirements of ASME RTP-1. By signing this certificate, neither the Inspector nor his/her employer (if other than the Fabricator) makes any warranty, expressed or implied, concerning performance of the vessel.

Date _____ _____
(month / day / year) (Inspector's signature)

_____
(print or type name)

GENERAL NOTES:

(a) The following documents, all updated to as-built status, are required attachments to this Data Report:
  (1) User's Basic Requirements Specification (UBRS)
  (2) Design Report signed and stamped by the Qualified Designer
  (3) drawings
  (4) copies of all quality control forms used in the Fabricator's Quality Control Program during the course of fabrication

  The above documents shall be part of the Fabricator's and End User's records. As an option, the data report may be submitted (without above documentation) to the National Board for vessel registration.

(b) This form may be reproduced and used without written permission from ASME if used for purposes other than republication.

ASMENORMDOC.COM : Click to view the full PDF of ASME RTP-1 2019

(19)

Form 1-3 Fabricator's Partial Data Report

FABRICATOR'S[1] PARTIAL DATA REPORT

We certify the information in this Partial Data Report to be correct and that the part(s) is designed and fabricated in accordance with all requirements of ASME RTP-1.

ASME RTP-1– _____

Description of part fabricated and inspected _____

Date _____ (month / day / year)

_____ (Fabricator's name)

_____ (signature of Certified Individual)

_____ (print or type name)

_____

_____

_____ (address of fabrication site)

INSPECTOR'S CERTIFICATION

I, the undersigned, employed by _____ of _____, have inspected the part(s) described in this Fabricator's Partial Data Report and believe that the Fabricator has constructed such in accordance with the requirements of ASME RTP-1. By signing this certificate, neither the Inspector nor his/her employer (if other than the Fabricator) makes any warranty, expressed or implied, concerning performance of the part(s).

Date _____ (month / day / year)

_____ (Inspector's signature)

_____ (print or type name)

GENERAL NOTES:

(a) The following documents, all updated to as-built status, are required attachments to this Data Report:
  (1) applicable design data signed and stamped by the Qualified Designer
  (2) drawings
  (3) copies of all quality control forms used in the Fabricator's Quality Control Program during the course of fabrication

(b) This form may be reproduced and used without written permission from ASME if used for purposes other than republication.

NOTE:

(1) The Fabricator referred to in this Partial Data Report is that Fabricator who constructed the part or portion of the vessel covered by this Partial Data Report.

ASMENORMDOC.COM : Click to view the full PDF of ASME RTP-1 2019

Part 2
Materials

2-100 SCOPE

Part 2 defines the materials comprising the glass fiber reinforced thermoset polyester and vinyl ester resin laminates, and the types of laminates used to fabricate the RTP corrosion-resistant equipment. See Mandatory Appendix M-12 for thermoplastic lining materials used in dual laminate vessels.

2-200 LAMINATE COMPOSITIONS

The composition of the allowable RTP laminates is limited to the specific materials in Part 2 and Mandatory Appendices M-1 and M-2. Subpart 2A covers predefined standard laminates as representative flat laminates. Subpart 2B covers laminates developed using the Lamination Analysis Method, by which the modulus properties of laminates are obtained. Subpart 2C covers permissible tolerances for laminate thickness variation.

Construction and testing for properties of design basis laminates are required in Subpart 2A. Calculation of laminate properties by the Lamination Analysis Method (Mandatory Appendix M-3) is addressed in Subpart 2B.

Minimum inspections and tests to be performed on reinforcements, prior to their use, are described in Mandatory Appendix M-1.

Minimum inspections and tests to be performed on resins, curing agents, and common additives, prior to their use, are described in Mandatory Appendix M-2.

2-210 Resin and Reinforcement Substitution

The Fabricator shall use the same resins and reinforcements during fabrication as used in the design basis laminates and Lamination Analysis Method, with the exception of the surfacing veil, which may be changed as required for corrosion resistance.

2-300 MATERIALS

2-310 Resin Matrix

The resin shall be that polyester or vinyl ester specified by the User's Basic Requirements Specification. Only resins with a heat deflection temperature (HDT) of at least 180°F (82°C) per ASTM D648 with a 264 psi (1.82 MPa) loading and a $^1/_8$-in. (3 mm) specimen, as published by the resin manufacturer, shall be used. Properties established through testing at ambient temperature are valid up to 180°F (82°C) or up to 35°F (19°C) below the resin's HDT, whichever is lower. When a maximum flame retardancy is specified by the UBRS, the flame spread rating shall be determined by the resin manufacturer according to ASTM E84 using all mat laminates greater than 0.1 in. (2.5 mm) thick. Verification of the flame spread rating is not required as a part of laminate qualification. Since flame spread can be determined only on flat laminate panels, verification is not required on fabricated equipment. Prior to use in laminate fabrications, the resin shall be inspected, tested, and found acceptable by the inspections and tests specified in Mandatory Appendix M-2.

(a) The catalyst/promoter/accelerator system shall be as recommended by the resin manufacturer and specified in the Fabricator's written procedures.

(b) The resin shall not contain any pigment, dyes, colorants, or filler, except as follows:

(1) A thixotropic agent that does not interfere with visual inspection of laminate quality, or with the required corrosion resistance of the laminate, may be added for viscosity control.

NOTE: The addition of a thixotropic agent may reduce the resistance of a laminate to some corrosive chemical environments. It is the responsibility of the Fabricator to obtain approval from the selector of the resin prior to using a thixotropic agent in the inner surface (para. 2A-221) or the interior layer (para. 2A-222).

(2) Resin pastes used to fill crevices before overlay shall not be subject to these limitations.

(3) Pigments, dyes, or colorants may be added to the exterior surface when specified by the UBRS.

NOTE: The addition of pigment, dyes, or colorants may interfere with visual inspection of laminate quality.

(4) Flame retardant synergists shall be used *only* when required in the UBRS. If fire retardant synergists were used to obtain the specified ASTM E84 flame spread rating, the same type and amount must be used in the laminate.

NOTE: The addition of fire retardant synergists may interfere with visual inspection of laminate quality.

(5) Common additives, as described in Mandatory Appendix M-2, Article G, may be added without requalifying the standard laminate.

ASMENORMDOC.COM : Click to view the full PDF of ASME RTP-1 2019

(6) Fillers or additives for abrasion resistance, thermal shock resistance, and electrical conductivity are allowed. A requalification of the design basis laminate is required if these fillers or additives are added to the structural laminate. All fillers or additives shall be approved by the End User and the resin supplier for the design chemical service.

Note that fillers may interfere with visual inspection of the laminate and could affect properties of the laminate.

2-320 Fiber Reinforcement

Fiber reinforcements shall be in compliance with the following references for each material type:

(a) fiberglass surfacing veil, organic fiber surfacing veil, carbon fiber surfacing veil, and fiberglass chopped strand mat — Mandatory Appendix M-1, Article A

(b) fiberglass spray-up roving and filament winding roving — Mandatory Appendix M-1, Article B

(c) fiberglass woven roving fabric, fiberglass unidirectional fabric, and fiberglass nonwoven multifabric — Mandatory Appendix M-1, Article C

(d) fiberglass milled fiber — Mandatory Appendix M-1, Article D

(e) with the exception of surfacing veils, all fiberglass reinforcement shall be type E

2-330 Balsa Wood Core

Balsa wood core materials shall be in compliance with Mandatory Appendix M-13.

SUBPART 2A
REQUIREMENTS FOR REPRESENTATIVE FLAT LAMINATES

2A-100 INTRODUCTION

A representative flat laminate is one made with the laminate sequence used in the design. Design basis laminates per para. 2A-300 are required.

2A-200 LAMINATE REQUIREMENTS

2A-210 Laminate Construction

Laminate construction shall be in accordance with the tabulated lay-up sequence for the specified type.

(a) Type I laminate structure is detailed in Table 2A-1.

(b) Type II laminate structure is detailed in Table 2A-2.

(c) Type X laminate structure is detailed in Subpart 2B.

2A-220 Laminate Composition

Laminates shall consist of a corrosion-resistant barrier (comprised of an inner surface and interior layer) and a structural layer. The reinforcement content of the corrosion barrier shall be 20% to 30% by weight.

2A-221 Inner Surface Corrosion-Resistant Barrier. The inner surface exposed to the contents shall be a resin-rich layer reinforced with a surfacing veil providing a thickness of 0.01 in. to 0.02 in. (0.25 mm to 0.50 mm).

2A-222 Interior Layer Corrosion-Resistant Barrier. The inner surface layer, exposed to the contents, shall be followed with an interior layer. This layer is composed of resin reinforced with noncontinuous glass fiber strands [1.0 in. to 2.0 in. (25 mm to 50 mm) long], applied in a minimum of two plies totaling a minimum of 3 oz/ft^2 (900 g/m^2). These plies shall be layers of chopped strand mat and/or chopped roving. Each ply of mat or pass of chopped roving shall be well rolled to thoroughly wet out reinforcement and remove entrapped air prior to the application of additional reinforcement. The combined thickness of the inner surface and interior layer shall not be less than 0.10 in. (2.5 mm). The corrosion-resistant barrier is to exotherm and cool before the structural layer is applied.

2A-223 Structural Layer

(a) Application of the structural layer shall not alter the corrosion-resistant barrier.

(b) The first ply of the structural layer of the laminate shall be one or more plies of noncontinuous glass fibers totaling 1.5 oz/ft^2 (450 g/m^2), comprised of chopped strand mat and/or chopped roving.

(c) Lay-up in the sequence of plies stated for the specified laminate type.

(d) All edges of reinforcement material shall be lapped a minimum of 1.0 in. (25 mm). Lapped edges of adjacent layers shall be staggered.

(e) Upon interruption of the fabrication process to allow for an exotherm, instructions noted on the appropriate table for the particular laminate type shall be followed. The final ply of reinforcement before interruption for gel and exotherm shall be 0.75 oz/ft^2 (225 g/m^2) minimum. The first ply of the ensuing lamination shall also be 0.75 oz/ft^2 (225 g/m^2) minimum. Both the final and first plies shall be comprised of layers of chopped strand mat and/or layers of chopped roving.

2A-224 Outer Surface

(a) The outer surface of the finished laminate shall be a separately applied paraffinated resin coat that, when cured, passes the acetone test per ASTM C582, para. 9.2.2. This outer surface coat shall either be applied over the final mat ply of the structural layer or over an additional resin-rich layer when required by (b).

(b) When the UBRS indicates the outer surface will be subjected to spillage or a corrosive environment, a resin-rich layer, in accordance with para. 2A-221, shall be applied over the final mat ply of the structural layer prior to the application of the paraffinated resin coat in (a).

ASMENORMDOC.COM : Click to view the full PDF of ASME RTP-1 2019

Table 2A-1 Standard Laminate Composition Type I

Nominal Thickness, in. (mm) [Notes (1), (2)]	Sequence of Plies																		Drafting Symbols
	1	2	3	4	5	6	7	8	9	10	11	12	13	14	15	16	17	18	
0.18 (4.6)	*V*	*M*	*M*	*M*	*M*	...	...	...	...	...	...	...	...	...	...	...	...	...	*V*, 4*M*
0.23 (5.8)	*V*	*M*	*M*	*M*	*M*	*M*	...	...	...	...	...	...	...	...	...	...	...	...	*V*, 5*M*
0.27 (6.9)	*V*	*M*	*M*	*M*	*M*	*M*	*M*	...	...	...	...	...	...	...	...	...	...	...	*V*, 6*M*
0.31 (7.9)	*V*	*M*	*M*	*M*	*M*	*M*	*M*	*M*	...	...	...	...	...	...	...	...	...	...	*V*, 7*M*
0.35 (8.9)	*V*	*M*	*M*	*M*	*M*	*M*	*M*	*M*	*M*	...	...	...	...	...	...	...	...	...	*V*, 8*M*
0.40 (10.2)	*V*	*M*	*M*	*M*	*M*	*M*	*M*	*M*	*M*	*M*	...	...	...	...	...	...	...	...	*V*, 9*M*
0.44 (11.2)	*V*	*M*	*M*	*M*	*M*	*M*	*M*	*M*	*M*	*M*	*M*	...	...	...	...	...	...	...	*V*, 10*M*
0.48 (12.2)	*V*	*M*	*M*	*M*	*M*	*M*	*M*	*M*	*M*	*M*	*M*	*M*	...	...	...	...	...	...	*V*, 11*M*
0.53 (13.5)	*V*	*M*	*M*	*M*	*M*	*M*	*M*	*M*	*M*	*M*	*M*	*M*	*M*	...	...	...	...	...	*V*, 12*M*
0.57 (14.5)	*V*	*M*	*M*	*M*	*M*	*M*	*M*	*M*	*M*	*M*	*M*	*M*	*M*	*M*	...	...	...	...	*V*, 13*M*
0.61 (15.5)	*V*	*M*	*M*	*M*	*M*	*M*	*M*	*M*	*M*	*M*	*M*	*M*	*M*	*M*	*M*	...	...	...	*V*, 14*M*
0.66 (16.8)	*V*	*M*	*M*	*M*	*M*	*M*	*M*	*M*	*M*	*M*	*M*	*M*	*M*	*M*	*M*	*M*	...	...	*V*, 15*M*
0.70 (17.8)	*V*	*M*	*M*	*M*	*M*	*M*	*M*	*M*	*M*	*M*	*M*	*M*	*M*	*M*	*M*	*M*	*M*	...	*V*, 16*M*
0.74 (18.8)	*V*	*M*	*M*	*M*	*M*	*M*	*M*	*M*	*M*	*M*	*M*	*M*	*M*	*M*	*M*	*M*	*M*	*M*	*V*, 17*M*

GENERAL NOTES:
(a) Thicknesses above 0.74 in. (18.8 mm) nominal can be used by adding additional plies of mat.
(b) Actual thickness and glass content of each sequence of plies shall be established by each Fabricator based on his or her design basis laminate.
(c) Corrosion barrier (plies 1, 2, and 3) shall gel and exotherm before structural plies are added.
(d) Structural lay-up may be interrupted at intervals long enough to exotherm in accordance with Fabricator's procedure.
(e) A weight equivalent layer or layers of chopped strand glass or mat may be used in place of layers of 1.5 oz/ft^2 (450 g/m^2) mat.

NOTES:
(1) Nominal thickness is calculated as follows:
V = 10 mil surface mat (veil) – 0.010 in./ply (0.25 mm/ply)
M = 1.5 oz/ft^2 mat – 0.043 in./ply (450 g/m^2 mat – 1.1 mm/ply)
(2) This information is based on historical data and may not reflect all laminates made today. Laminates made today are often thinner and have a higher glass content than noted in the Table. The Table should be used for establishing minimum glass plies per nominal laminate thickness. Ply thicknesses should be based on design basis laminates.

(c) The UBRS may include provisions to minimize ultraviolet degradation of the laminate. Methods include use of ultraviolet absorbers, screening agents, or resins resistant to ultraviolet degradation, or incorporation of pigment of sufficient opacity in the paraffinated resin coat. Since pigmentation makes laminate inspection difficult, the resin-rich layer shall be applied only after the laminate has been inspected by the Inspector. This provision may be waived by the User.

(d) Where the final lay-up is exposed to air, full surface cure shall be obtained by applying to the final lay-up a coat of paraffinated resin that, when cured, passes the acetone test. Other techniques such as sprayed, wrapped, or overlaid films are also acceptable methods to attain surface cure, provided the surface resin under the film passes the acetone test.

2A-300 REQUIREMENTS FOR PHYSICAL AND MECHANICAL PROPERTIES (19)

(a) The Fabricator shall prepare design basis laminates for each combination of resin and glass to determine thickness and glass content. Straight line interpolation shall be used to determine values not tested directly. In addition, the Fabricator shall choose one or more of the following options to establish design values:

(1) The Fabricator shall specify the minimum values in Table 2A-3. This method shall not be used where laminates are fabricated for use above 180°F (82°C).

(2) The Fabricator shall obtain the tensile strength, tensile modulus, flexural strength, and flexural modulus of the design basis laminates in accordance with para. 2A-400. Results shall be certified by the individual who conducted or supervised the testing.

(-a) When the corrosion barrier is included in the design as a contributor to the structural strength of the laminate, the following design basis laminates shall

ASMENORMDOC.COM : Click to view the full PDF of ASME RTP-1 2019

Table 2A-2 Standard Laminate Composition Type II

Nominal Thickness, in. (mm) [Notes (1), (2)]	Sequence of Plies																				Drafting Symbols
	1	2	3	4	5	6	7	8	9	10	11	12	13	14	15	16	17	18	19	20	
0.22 (5.6)	*V*	*M*	*M*	*M*	*R*	*M*	...	...	...	...	...	...	...	...	...	...	...	...	...	...	*V,2M,MRM*
0.29 (7.4)	*V*	*M*	*M*	*M*	*R*	*M*	*R*	*M*	...	...	...	...	...	...	...	...	...	...	...	...	*V,2M,2(MR)M*
0.37 (9.4)	*V*	*M*	*M*	*M*	*R*	*M*	*R*	*M*	*R*	*M*	...	...	...	...	...	...	...	...	...	...	*V,2M,3(MR)M*
0.41 (10.4)	*V*	*M*	*M*	*M*	*R*	*M*	*R*	*M*	*R*	*M*	*M*	...	...	...	...	...	...	...	...	...	*V,2M,3(MR)M,M*
0.49 (12.5)	*V*	*M*	*M*	*M*	*R*	*M*	*R*	*M*	*R*	*M*	*M*	*R*	*M*	...	...	...	...	...	...	...	*V,2M,3(MR)M,MRM*
0.56 (14.2)	*V*	*M*	*M*	*M*	*R*	*M*	*R*	*M*	*R*	*M*	*M*	*R*	*M*	*R*	*M*	...	...	...	...	...	*V,2M,3(MR)M,2(MR)M*
0.64 (16.3)	*V*	*M*	*M*	*M*	*R*	*M*	*R*	*M*	*R*	*M*	*M*	*R*	*M*	*R*	*M*	*R*	*M*	...	...	...	*V,2M,3(MR)M,3(MR)M*
0.68 (17.3)	*V*	*M*	*M*	*M*	*R*	*M*	*R*	*M*	*R*	*M*	*M*	*R*	*M*	*R*	*M*	*R*	*M*	*M*	...	...	*V,2M,3(MR)M,3(MR)M,M*
0.76 (19.3)	*V*	*M*	*M*	*M*	*R*	*M*	*R*	*M*	*R*	*M*	*M*	*R*	*M*	*R*	*M*	*R*	*M*	*M*	*R*	*M*	*V,2M,3(MR)M,3(MR)M,MRM*

GENERAL NOTES:
(a) Thicknesses above 0.76 in. (19.3 mm) nominal can be used following pattern established for 0.76 in. (19.3 mm) thick laminate.
(b) Actual thickness and glass content of each sequence of plies shall be established by each Fabricator based on his or her design basis laminate.
(c) Corrosion barrier (plies 1, 2, and 3) shall gel and exotherm before structural plies are added.
(d) Structural lay-up may be interrupted long enough to exotherm between adjacent *"MM"* plies. If required by fabrication procedure, location of exotherm plies may be changed by shifting plies 10 and 17 within the laminate body or by splitting an *"M"* ply into weight-equivalent layer(s).
(e) A weight equivalent layer or layers of chopped strand glass or mat may be used in place of layers of 1.5 oz/ft^2 (450 g/m^2) mat.

NOTES:
(1) Nominal thickness is calculated as follows:
V = 10 mil surface mat (veil) – 0.010 in./ply (0.25 mm/ply)
M = 1.5 oz/ft^2 mat – 0.043 in./ply (450 g/m^2 – 1.1 mm/ply)
R = 24 oz/yd^2 woven roving – 0.033 in./ply (810 g/m^2 woven roving – 0.84 mm/ply)
(2) This information is based on historical data and may not reflect all laminates made today. Laminates made today are often thinner and have a higher glass content than noted in the Table. The Table should be used for establishing minimum glass plies per nominal laminate thickness. Ply thicknesses should be based on design basis laminates.

ASMENORMDOC.COM : Click to view the full PDF of ASME RTP-1 2019

Table 2A-3 Minimum Values of Flat Laminates

Nominal Thickness, in. (mm)	Type	Ultimate Tensile Strength, psi (MPa) [Note (1)]	Tensile Modulus, psi (GPa) [Note (1)]	Ultimate Flexural Strength, psi (MPa) [Note (2)]	Flexural Modulus, psi (GPa) [Note (2)]
All	I	9.0 × 10^3 (62.1)	1.00 × 10^6 (6.90)	16.0 × 10^3 (110)	0.70 × 10^6 (4.83)
0.22 (5.6)	II	12.0 × 10^3(82.7)	1.30 × 10^6 (8.96)	19.0 × 10^3 (131)	0.80 × 10^6 (5.52)
0.29 (7.4)	II	13.5 × 10^3 (93.1)	1.40 × 10^6 (9.65)	20.0 × 10^3 (138)	0.90 × 10^6 (6.21)
0.37 (9.4) and above	II	15.0 × 10^3 (103)	1.50 × 10^6 (10.3)	22.0 × 10^3 (152)	1.00 × 10^6 (6.90)

GENERAL NOTE: The tabulated values remain unchanged up to 180°F (82°C). Above that temperature, measured properties may decrease.

NOTES:
(1) ASTM D638 at 73°F (23°C), ASTM D3039 at 77°F (25°C), or ASTM D5083 at 73°F (23°C).
(2) ASTM D790 at 73°F (23°C).

include the inner surface, interior layer, and structural layer, but not the outer surface:

(-1) Type I, 0.18 in. (4.6 mm) nominal thickness

(-2) Type I, 0.48 in. (12.2 mm) nominal thickness

(-3) Type I, 0.74 in. (18.8 mm) nominal thickness

(-4) Type II, 0.22 in. (5.6 mm) nominal thickness

(-5) Type II, 0.49 in. (12.5 mm) nominal thickness

(-6) Type II, 0.76 in. (19.3 mm) nominal thickness

(-7) Type X, 0.25 in. (6.4 mm) nominal thickness

(-8) Type X, 0.50 in. (12.7 mm) nominal thickness

(-9) Type X, 0.75 in. (19.1 mm) nominal thickness

(-b) When the corrosion barrier is excluded from the design as a contributor to the structural strength of the laminate per para. 6-930(d)(5)(-d), the following design basis laminates shall include only the structural layer:

(-1) Type I, 0.35 in. (8.9 mm) nominal thickness

(-2) Type II, 0.37 in. (9.4 mm) nominal thickness

(-3) Type X, 0.38 in. (9.7 mm) nominal thickness

(-c) Properties of Types I, II, and noncylindrical X laminates in (-a) and (-b) above shall be established on flat laminates prepared under shop conditions. For Type II laminates, the woven roving is laid-up in square array with warp rovings parallel layer to layer, and test specimens are cut parallel to the warp rovings.

(b) For design purposes, properties established at the applicable ASTM test method temperature are valid up to 180°F (82°C) or up to 35°F (19°C) below the resin's HDT, whichever is lower. Where laminates are fabricated for use at design temperatures above 180°F (82°C) or up to 35°F (19°C) below the HDT, certification of strength and modulus per paras. 2A-400(a) and 2A-400(b) shall be supplied at or above the specified temperature.

(c) The thickness and glass content of laminates shall be based on the data obtained from the Fabricator's design basis laminates. For laminate Types I, II, and X, thickness and glass content shall be determined from laminates described in (a)(2). Six thickness and glass content (weight percent) readings shall be taken on each design basis laminate. They shall be taken at 1 in. to 2 in. (25 mm to 50 mm) from each corner, except for two readings taken from the middle of the laminate. The highest thickness and glass content (weight percent) reading taken (of the six) shall be no more than 115% of the lowest reading taken. The six readings shall be averaged to give the design basis laminate thickness and glass content for each laminate tested. The average thickness value shall be from 85% to 115% of the nominal thickness listed in Tables 2A-1 and 2A-2.

(d) The laminate compositions and minimum properties for Type I production laminates are given in Tables 2A-1 and 2A-3.

(e) The laminate compositions and minimum properties for Type II production laminates are given in Tables 2A-2 and 2A-3.

NOTE: The laminate properties found in Table 2A-3 are conservative and historically proven. They represent a compilation of data on the most available laminating materials.

2A-400 TEST METHODS

(a) Tensile strength and tensile modulus of elasticity shall be determined by ASTM D638, ASTM D3039 at 77°F (25°C), or ASTM D5083. The tensile modulus shall be determined using the data between 400 and 1,300 microstrain unless another strain range better represents the flat portion of the curve. Any strain range other than 400 and 1,300 microstrain shall be reported with the modulus value. Specimens shall be in accordance with Type III, Figure 1 of ASTM D638, or in accordance with para. 6.1.1 of ASTM D5083, except that actual laminate thickness shall be used.

(b) Flexural strength and flexural modulus of elasticity shall be determined by ASTM D790. The molded surface (corrosion barrier) shall be tested in compression.

(c) Glass content, weight percent, shall be determined in accordance with ASTM D2584.

(d) When required, the residual undisturbed glass fiber plies from ASTM D2584 shall be separated carefully and counted and/or weighed to confirm standard lay-up sequence.

(e) Thickness shall be measured with a micrometer or caliper. When the configuration of the part will not allow the use of these instruments, a digital magnetic intensity instrument or an ultrasonic thickness gauge found to be accurate when measuring vessel cutouts shall be used.

(f) When required, thermal conductivity shall be measured in accordance with ASTM C177.

(g) When required, thermal expansion shall be measured in accordance with ASTM D696.

(h) For isotropic laminates, mechanical property testing in only one direction is required. For anisotropic laminates, testing in both the principal *x* and *y* directions is required.

2A-500 RECORDS

The results of all required tests shall be recorded and shall be available for review by the Inspector.

2A-600 ADDITIONAL STANDARD LAMINATE COMPOSITIONS FOR SUBPART 2A

Other standard laminates may be used only after they have been listed as acceptable in Subpart 2A. In order for the new laminate to receive proper consideration,

ASMENORMDOC.COM : Click to view the full PDF of ASME RTP-1 2019

information and data are required to properly categorize the laminate. In general, this information and data include, but are not necessarily limited to, the following:

(a) All materials of the laminate shall be identified and suggested specifications provided for any material not covered in Mandatory Appendices M-1 and M-2.

(b) The laminate information needed includes tensile strength, tensile modulus, glass content, and thickness. The information shall be supplied in the form of Table 2A-1 and/or Table 2A-2, plus data for minimum properties of standard laminates, Table 2A-3. The data shall be generated from laminates made under typical shop conditions and tested per para. 2A-400. The information shall include the heat deflection temperature of the resin used, which is required to be 180°F (82°C) or greater.

NOTE: The requester should consider supplying data on laminates made using two or more widely different specific gravity resins by three or more fabricators, together with the appropriate Type I and/or Type II control laminate data.

Where the laminate is intended for special applications, requires special handling, or has known limitations or susceptibility to failure in certain services, precautionary requirements and information should be included in the submittal. The data should be submitted on laminates intended for use in place of the design basis laminates of Type I and/or Type II, as outlined in para. 2A-300(a)(2). Examples of representative field experiences should be submitted.

NOTE: When the new laminate is a minor modification of an existing standard laminate, the data required may be reduced with the concurrence of the Committee. When the data supplied is insufficient for an adequate evaluation, the Committee will request additional data.

SUBPART 2B
REQUIREMENTS FOR LAMINATES DEVELOPED USING THE LAMINATION ANALYSIS METHOD (TYPE X)

2B-100 LAMINATE COMPOSITION

Laminates developed under Subpart 2B are designated as Type X laminates. Laminates developed under Subpart 2B are nonstandard laminates not defined in Tables 2A-1, 2A-2, and 2A-3.

Laminates shall consist of a corrosion-resistant barrier (comprised of an inner surface and interior layer) and a structural layer.

2B-110 Inner Surface Corrosion-Resistant Barrier

See para. 2A-221.

2B-120 Interior Layer Corrosion-Resistant Barrier

See para. 2A-222.

2B-130 Structural Layer

(a) Application of the structural layer shall not alter the corrosion-resistant barrier.

(b) The first layer of the structural portion of the laminate shall be one or more plies of chopped strand mat totaling 0.75 oz/ft^2 (225 g/m^2) minimum or equivalent chopped roving saturated with resin.

(c) The balance of the structural layer shall then be applied in strict duplication of the laminate sequence as designed per Mandatory Appendix M-3.

2B-140 Outer Surface

See para. 2A-224.

2B-200 REQUIREMENTS FOR PHYSICAL AND MECHANICAL PROPERTIES

(a) The resin matrix tensile modulus and specific gravity are measured on a fully cured 0.125-in. (3 mm) thick neat resin casting. Tensile modulus and cured specific gravity properties provided by the resin manufacturer may be used for design temperatures up to 180°F (82°C).

(b) Standardized tensile modulus and specific gravity for E glass shall be used for the Lamination Analysis Method (Mandatory Appendix M-3).

(c) Laminate properties shall be calculated using the Lamination Analysis Method contained in Mandatory Appendix M-3.

(d) The Fabricator shall prepare design basis laminates and test per para. 2A-300.

(e) For cylindrical laminates, the following mechanical property tests are required: flexural strength and modulus in the hoop and axial directions (corrosion barrier in compression) and tensile strength and modulus in the axial direction.

2B-300 TEST METHODS

(a) Glass content, weight percent, shall be determined in accordance with ASTM D2584.

(b) Matrix tensile modulus shall be determined in accordance with ASTM D638.

(c) Matrix specific gravity shall be determined in accordance with ASTM D792.

(d) Thickness of individual plies shall be determined with a microscope or other instrument having an accuracy of 0.001 in. (0.02 mm).

2B-400 RECORDS

For each laminate in para. 2B-130, wind angles, number of wind cycles, and supplemental reinforcement shall be recorded. The objective is to uniquely define each laminate. Also, for each laminate, results of testing done in

ASMENORMDOC.COM : Click to view the full PDF of ASME RTP-1 2019

paras. 2B-300(a) and 2B-300(b) shall be recorded and made available for review by the Inspector.

SUBPART 2C
PERMISSIBLE TOLERANCES FOR LAMINATE THICKNESS VARIATION

There are two types of laminate thickness tests. The first, *average spot thickness,* is used to measure a small area or a small component [see para. 6-920(f)(2)]. The second, *average thickness of a major part,* is used to measure a large area, such as a shell or head, where several average spot thicknesses can be taken [see para. 6-920(f)(2)].

2C-100 TOLERANCE FOR AVERAGE SPOT THICKNESS

The thinnest value (of six) shall be equal to or greater than 90% of the design thickness of the laminate. The thickest value (of six) shall be no more than 120% of the thinnest value. The average of six thickness values must be no less than 95% nor more than 125% of the design thickness of the laminate. See para. 2C-300 for exceptions.

2C-200 TOLERANCE FOR AVERAGE THICKNESS OF A MAJOR PART

The *average thickness of a major part* is the average of four average spot thickness values. The average thickness of a major part shall be not less than 95% nor more than 120% of the design thickness of the laminate. See para. 2C-300 for exceptions.

2C-300 EXCEPTIONS AND ADJUSTMENTS

Fabricators may add additional material to achieve the design thickness. All such additions shall be in accordance with the full repeating sequence of structural plies. The repeating construction of reinforced laminate may result in an over-thickness, which is permissible. Corrosion-resistant barrier total thickness in excess of the design thickness may not be used as part of the design structural layer thickness. The design corrosion-resistant barrier thickness, design structural layer thickness, and design total thickness for each major part shall each meet the tolerances of Subpart 2C.

ASMENORMDOC.COM : Click to view the full PDF of ASME RTP-1 2019

Part 3
Design

(19) **3-100 SCOPE**

Part 3 sets forth design formulas and rules for the use of contact molded and filament wound RTP materials for the fabrication of corrosion-resistant vessels. It is limited to vessels that operate up to and including 15.0 psig (103 kPag) internal pressure as measured at the top of the vessel. The limit on external pressure is 15.0 psig (103 kPag). The hydrostatic head resulting from the weight of internal contents and applied pressure shall be additive.

(a) Part 3 contains two separate subparts.

(1) Subpart 3A, Design by Rules

(2) Subpart 3B, Design by Stress Analysis

(b) Subpart 3A or 3B methods may be used at the discretion of the Qualified Designer for all or any part of RTP vessels.

(c) If specific rules of Subpart 3A do not apply, Subpart 3B design methods shall be used. Rules and limitations in Subpart 3A only apply to Subpart 3A.

3-200 GENERAL

The following parameters are common to all RTP equipment:

(a) The heads of RTP vessels shall be fabricated by contact molded laminates.

(b) The cylindrical shells of RTP equipment may be fabricated by contact molding or filament winding.

(c) Contact molded or filament wound laminate thicknesses are calculated for internal loadings and external loadings in accordance with the rules and procedure in Subpart 3A or 3B.

(d) Laminates shall be selected so that imposed load(s) does not produce stresses or strains in excess of those specified in Subpart 3A or 3B, as applicable.

(e) Ultimate tensile strength and modulus values of all types of laminates may require reduction when temperatures above 180°F (82°C) are encountered. See para. 2A-300 or 2B-200 for design temperatures above 180°F (82°C).

(f) The average thickness of any pressure-containing part of a vessel shall not be less than 0.22 in. (5.6 mm). The procedure to determine the thickness of such a part is specified in para. 6-920(f)(2). The permissible thickness tolerance of such a part is specified in Subpart 2C.

(g) The minimum ultimate axial tensile strength shall be 9,000 psi (62.1 MPa) for all laminate construction.

3-300 DEFINITIONS AND RELATED REQUIREMENTS (19)

atmospheric vessel: a vessel provided with both an overflow and a free vent. An atmospheric vessel has a maximum allowable working pressure of 0 psig (0 kPag) and a maximum allowable external pressure of 0 psig (0 kPag).

design pressure: the maximum positive internal gage pressure anticipated at the top of the vessel. The design pressure is specified by the User on the UBRS as a basis for design.

design temperature: the highest anticipated temperature which major components will be exposed to during the life of the vessel. The design temperature is specified by the User as a basis for design.

external design pressure: the maximum pressure differential by which the external pressure is anticipated to exceed the internal pressure in a vessel at the designated maximum design temperature. The external design pressure is specified by the User as a basis for design.

free vent: an opening above the maximum liquid level and discharging freely to atmosphere.

intermittent loads: loads of short duration including, but not limited to

(a) design wind load

(b) loads due to design seismic activity

(c) design snow load

(d) additional hydrostatic pressure under test

(e) intermittent gravity loads on platforms and roofs

(f) any other intermittent load specified in the UBRS

(g) loads imposed by pressure relief

(h) thermal loads due to brief temperature excursions due to process upset

(i) external flooding

Each of the above intermittent loads shall be considered independently in combination with the sustained loads. In addition, wind load shall be evaluated with the vessel empty of liquid contents. Also, temporary loads occurring during manufacture, shipping, and installation shall be considered using intermittent load stress criteria.

ASMENORMDOC.COM : Click to view the full PDF of ASME RTP-1 2019

maximum allowable external working pressure (MAEWP): the maximum pressure differential by which the external pressure may exceed the internal pressure in a vessel at the designated maximum design temperature. It is the basis for the setting of the vacuum relieving devices protecting the vessel. The maximum allowable external working pressure shall not exceed the external design pressure unless additional calculations and applicable tests show that all other requirements of this Standard are met at a higher external pressure difference. For vessels that comply with this Standard, the maximum allowable external working pressure shall not exceed 15.0 psig (103 kPag).

maximum allowable working pressure (MAWP): the maximum positive gage pressure permissible at the top of a vessel in its operating position at the designated design temperature. It is the basis for the setting of the pressure-relieving devices protecting the vessel. The maximum allowable working pressure shall not exceed the internal design pressure unless additional calculations and applicable tests show that all other requirements of this Standard are met at a higher internal pressure. For vessels that comply with this Standard, the maximum allowable working internal pressure shall not exceed 15.0 psig (103 kPag).

NOTE: The hydrostatic pressure measured at the bottom of a vessel will normally exceed the maximum allowable working pressure.

maximum liquid level: the maximum level of liquid contents in a vessel. The maximum liquid level shall not be lower than the overflow or equivalent protection or, in its absence, the highest point on the vessel. The maximum liquid level is used as a basis for design for all calculations other than for external pressure calculations, except that a lower normal liquid level may be used for seismic design calculations.

NOTE: The contents of a vessel may exceed the maximum liquid level for hydrostatic testing. In this case, stresses resulting from hydrostatic testing must be considered in the design.

normal liquid level: a liquid level that has a low probability of exceedance and is used as the basis for seismic design. The normal liquid level, if different from the maximum liquid level, shall be specified by the User in the UBRS.

overflow: an opening or system of piping connected at the maximum liquid level of the vessel, and/or with its highest invert at the maximum liquid level of the vessel, capable of freely accommodating all simultaneous liquid in flows to the vessel and conducting them by gravity to a disposal or containment facility.

sustained loads: continuous loads including, but not limited to

(a) internal design pressure

(b) external design pressure

(c) hydrostatic pressure due to weight of liquid contents

(d) loads at supports

(e) other gravity loads due to self weight and supported internal and external equipment

(f) loads imposed by piping and ducting, and other external imposed loads

(g) loads imposed by process activity including agitation

(h) loads due to unbalanced pressure (e.g., flexible joints, process flow, internal design pressure acting against a supported flat bottom)

(i) internal thermal loads due to expansion or contraction and thermal gradients

(j) any other sustained load specified in the UBRS

All nonexclusive combinations of the above loads shall be considered to establish the maximum (tensile) and minimum (compressive) sustained load on any component. In addition to other combinations, a vessel subject to external pressure shall be evaluated empty of liquid contents.

SUBPART 3A
DESIGN BY RULES

3A-100 LOADINGS

As a minimum, the loadings to be considered in designing RTP vessels shall include the following:

(a) external and internal pressure, including the additional pressure resulting from the static head of the contents

(b) weight of the vessel and contents under design conditions

(c) superimposed static loads from machinery, other vessels, insulation, personnel, or platforms

(d) attachments

(1) internal (baffles, weirs, packing, etc.)

(2) external (lugs, support rings, legs, skirts, etc.)

(e) dynamic, such as fluid agitation, subliquid surface jets

(f) environmental, such as snow, wind, and seismic loadings

(g) thermal expansion and stresses caused by thermal gradients or restrained expansion

(h) any other combination of loads specified in the UBRS

3A-110 Design Acceptability

The requirements for the acceptability of a design by rules, including design details, are as follows:

(a) Where a minimum laminate thickness is prescribed by formula in paras. 3A-200 through 3A-800, this shall be the minimum.

ASMENORMDOC.COM : Click to view the full PDF of ASME RTP-1 2019

(b) Where a maximum internal or external pressure is prescribed by formula in paras. 3A-200 through 3A-800, this shall be the maximum.

(c) Where a maximum deflection is prescribed by formula in paras. 3A-200 through 3A-800, this shall be the maximum.

(d) Where no formula is prescribed in paras. 3A-200 through 3A-800 but other recognized engineering formulas are applicable, the rules of paras. 3A-120 through 3A-140 shall apply.

3A-120 Other Formulas

Details of design and construction for which no rule is provided in Subpart 3A, but for which other recognized engineering formulas exist, may be accepted by comparing calculated laminate stress with ultimate laminate strength to establish a minimum design factor.

3A-121 Laminate Types. Other recognized engineering formulas are applicable to Type I or II laminates, laminates in accordance with Subpart 2B, or combinations of Types I and II. Other combinations, e.g., Type II with laminates in accordance with Subpart 2B, require additional consideration. Laminate design strengths are applicable to reinforcement patterns continuing in the plane of the membrane.

3A-122 Design Factors. The minimum design factors applied to ultimate strength-based design shall be 10 for sustained loads and combinations of sustained loads, and 5 for intermittent (short-term) loads taken individually and in combination with sustained loads.

3A-123 Loadings. Loadings to be considered include those listed in para. 3A-100.

3A-124 Laminate Strengths. Laminate tensile strength and flexural strength are as established in Subpart 2A. Ultimate secondary bond shear stress is considered to be 2,000 psi (13.79 MPa). Ultimate peel strength is considered to be 500 lb/in. (88 N/mm).

3A-125 Filament Wound Laminates. For design in accordance with this section, the ultimate hoop tensile strength of filament wound laminates wound at an angle of 54 deg or higher to the mandrel may be determined by testing or taken to be 0.01 times the calculated hoop tensile modulus. Axial tensile and flexural strength of filament wound laminates shall be established by testing.

3A-126 Combined Stress. Combined flexural and membrane stresses shall comply with the following rule:

$$\frac{\sigma_{mc}}{S_t} + \frac{\sigma_{fc}}{S_f} \leq \frac{1}{F_{10}}$$

and

$$\frac{\sigma_{mi}}{S_t} + \frac{\sigma_{fi}}{S_f} \leq \frac{1}{F_5}$$

where

F_5 = design factor
= 5 for intermittent loads
F_{10} = design factor
= 10 for sustained loads
S_f = ultimate flexural strength, psi (MPa)
S_t = ultimate tensile strength, psi (MPa)
σ_{fc} = calculated maximum sustained flexural stress, psi (MPa)
σ_{fi} = calculated maximum intermittent flexural stress, psi (MPa)
σ_{mc} = calculated maximum sustained membrane stress, psi (MPa)
σ_{mi} = calculated maximum intermittent membrane stress, psi (MPa)

3A-127 Recognized Formulas. Other recognized formulas include stress calculations presented in various sections of the ASME pressure vessel codes, formulas included in the nonmandatory appendices of this Standard, and well-documented formulas presented elsewhere.

3A-130 Maximum Corrosion-Resistant Barrier Strain (19)

In addition to the stress criteria listed above, the tensile strain in the corrosion-resistant barrier shall be limited to the following:

(a) for sustained loads: 0.0013 in./in. (mm/mm) for resins for which the tensile elongation of the cast resin is at least 4%, and 0.0010 in./in. (mm/mm) for all other resins. Elongation of the resin shall be determined in accordance with ASTM D638 at 77°F (25°C).

(b) for intermittent loads: 0.0020 in./in. (mm/mm).

(c) It is not necessary to apply the corrosion barrier strain limits in (a) or (b) above to Type I or Type II laminates. The stress criteria in Subpart 3A are adequate to limit the corrosion barrier strains to acceptable values in Type I and Type II laminates.

3A-140 Maximum Compressive Stress Stability

In addition to the stress criteria listed above, for all loading conditions and combinations (including external pressure) that result in compressive loads in a shell, the stress shall be limited to one-fifth of the critical buckling stress.

3A-150 Conservative Design

Where the application of para. 3A-110(d) indicates a less-conservative design than paras. 3A-110(a), 3A-110(b), or 3A-110(c), additional justification shall be provided before using the less-conservative design.

ASMENORMDOC.COM : Click to view the full PDF of ASME RTP-1 2019

3A-200 DESIGN FOR TOTAL INTERNAL PRESSURE

3A-210 Calculation of Minimum Thickness of Cylindrical Shells

(a) Contact molded construction is calculated as follows:

Hoop Loading	Axial Loading
$t_h = \dfrac{PD_i}{2S_h / F}$	$t_a = \dfrac{N_{ax}}{S_a / F}$

where

D_i = inside diameter, in. (mm)
F = design factor = 10
N_{ax} = axial force per circumferential inch of shell, lb/in. (N/mm)
P = total internal pressure, psig (MPa) (internal pressure plus hydrostatic head)
S_a = ultimate axial tensile strength, psi (MPa)
S_h = ultimate hoop tensile strength, psi (MPa)
t_a = total wall thickness, in. (mm), for axial stress
t_h = total wall thickness, in. (mm), for circumferential stress

The shell thickness shall be the greater of t_a or t_h at the point considered by the calculation.

(b) Filament wound construction is calculated as follows:

Hoop Loading	Axial Loading
$t_h = \dfrac{PD_i}{2(0.001E_h)}$	$t_a = \dfrac{N_{ax}}{S_a / F}$

or

$$t_h = \frac{PD_iF}{2S_h} \quad t_a = \frac{N_{ax}F}{S_a}$$

NOTE: Corrosion-resistant barrier strain shall not exceed limits in para. 3A-130.

where

E_h = hoop tensile modulus, psi (MPa)

The shell thickness shall be the greater of t_a or t_h at the point considered by the calculation.

3A-220 Design of Cylindrical Shells Under Combined Axial Loads

3A-221 Tensile Loads. The thickness of shells under combined axial tensile loads shall be equal to the largest value for t as calculated below:

(a) Shells under internal pressure shall meet the requirements of para. 3A-210.

(b) For shells under combined axial tensile design loads, t shall be calculated as follows:

$$t = \frac{M_A}{\pi(D/2)^2(S_a/F)} + \frac{F_A}{\pi D(S_a/F)} + \frac{PD}{4(S_a/F)}$$

where

D = inside diameter, in. (mm)
F = design factor = 10
F_A = axial tensile force resulting from design loads, lb (N)
M_A = bending moment resulting from design loads, in.-lb (N·mm)
P = internal pressure, psi (MPa)
S_a = ultimate axial tensile strength, psi (MPa)

(c) For shells under combined axial tensile loads resulting from design loads, including wind, snow, or seismic loads, t shall be calculated as follows:

$$t = \frac{|M_A| + |M_B|}{\pi(D/2)^2(S_a/F)} + \frac{F_A + F_B}{\pi D(S_a/F)} + \frac{PD}{4(S_a/F)}$$

where

F = design factor = 5
F_B = axial tensile force resulting from wind, snow, or seismic loads, lb (N)
M_B = bending moment resulting from wind, snow, or seismic loads, in.-lb (N·mm)

3A-222 Compressive Loads. The thickness of shells under combined axial compressive loads shall be equal to the largest value for t as calculated below.

(a) Shells under external pressure shall meet the requirements of para. 3A-310.

(b) For shells under combined axial compressive design loads, t shall be the greater of t_1 or t_2 calculated as follows:

$$t_1 = \frac{|M_A|}{\pi(D/2)^2(S_a / F_1)} + \frac{|F_A|}{\pi D(S_a / F_1)} + \frac{P_eD}{4(S_a/F_1)}$$

$$t_2 = \left\{\left[\frac{|M_A|}{\pi(D/2)^2} + \frac{|F_A|}{\pi D} + \frac{P_eD}{4}\right]\frac{F_2(D/2)}{0.3E_{eff}}\right\}^{0.5}$$

where

D = inside diameter, in. (mm)
E_{af} = axial flexural modulus, psi (MPa)
E_{eff} = $(E_{af}E_{ht})^{0.5}$
E_{ht} = hoop tensile modulus, psi (MPa)
F_A = axial compressive force resulting from design loads, lb (N)
F_1 = design factor = 10
F_2 = design factor = 5
M_A = bending moment resulting from design loads, in.-lb (N·mm)
P_e = external pressure, psi (MPa)
S_a = ultimate axial tensile strength, psi (MPa)

ASMENORMDOC.COM : Click to view the full PDF of ASME RTP-1 2019

(c) For shells under combined axial compressive loads resulting from design loads and occasional loads, including wind, snow, or seismic loads, t shall be the greater of t_1 or t_2 calculated as follows:

$$t_1 = \frac{|M_A| + |M_B|}{\pi(D/2)^2(S_a/F_1)} + \frac{|F_A| + |F_B|}{\pi D(S_a/F_1)} + \frac{P_e D}{4(S_a/F_1)}$$

$$t_2 = \left\{\left[\frac{|M_A| + |M_B|}{\pi(D/2)^2} + \frac{|F_A| + |F_B|}{\pi D} + \frac{P_e D}{4}\right]\frac{F_2(D/2)}{0.3E_{eff}}\right\}^{0.5}$$

where

F_B = axial compressive force resulting from wind, snow, or seismic loads, lb (N)
F_1 = design factor = 5
F_2 = design factor = 5
M_B = bending moment resulting from wind, snow, or seismic loads, in.-lb (N·mm)

3A-230 Minimum Thickness of Torispherical Heads

The minimum thickness, t, of torispherical heads shall be calculated as follows:

$$t = \frac{MPR_c}{2(S_u/F)}$$

where

M = $\frac{1}{4}[3+R_c/r)^{0.5}]$
R_c = head crown radius, in. (mm) ≤ D_i
r = head knuckle radius, in. (mm) ≥ $0.06R_c$
S_u = ultimate tensile strength, psi (MPa)

For a torispherical head where $R_c = D_i$ and $r = 0.06R_c$, the minimum thickness, t, reduces to

$$t = \frac{0.885PR_c}{S_u/F}$$

For torispherical heads subject to internal loading, the knuckle radius shall be externally reinforced in accordance with Figure 4-1, sketch (a). The reinforcement thickness shall be equal to the thickness of the head as calculated above. The thickness of a joint overlay near the knuckle radius tangent line of a dished head contributes to the knuckle reinforcement. For torispherical heads not subject to internal loading, see Figure 4-1, sketch (b).

3A-240 Minimum Thickness of Ellipsoidal Heads

The minimum thickness of ellipsoidal heads (2:1) shall be calculated as follows:

$$t = \frac{PD_i}{2S_u/F}$$

3A-250 Minimum Thickness of Toriconical Heads

(a) The minimum thickness of toriconical heads that have a half apex angle, α, not greater than 60 deg shall be calculated as follows:

The thickness of the conical portion, t_c, of a toriconical head, where the knuckle radius is at least 6% of the inside diameter of the shell and not less than three times the knuckle thickness, shall be

$$t_c = \frac{PD_c}{2\cos\alpha(S_u/F)}$$

where

D_c = inside diameter of the conical portion of a toriconical head at the point of tangency to the knuckle, measured perpendicular to the axis of the cone (see Figure 3-1), in. (mm)
= $D_i - 2r(1 - \cos\alpha)$
D_i = inside diameter of head skirt (see Figure 3-1), in. (mm)
r = inside knuckle radius, in. (mm)
α = one-half of the included (apex) angle of the cone at the centerline of the head

The minimum thickness of the knuckle, t_k, shall be

$$t_k = \frac{0.5MPR_c}{S_u/F}$$

Figure 3-1 Toriconical Head Dimensions

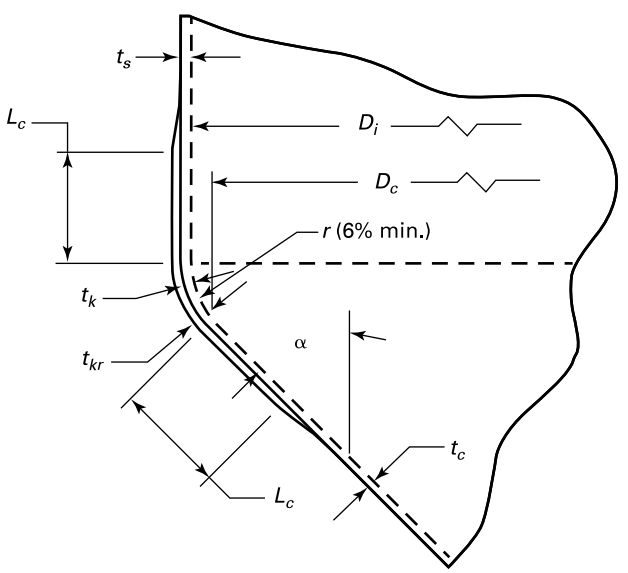

ASMENORMDOC.COM : Click to view the full PDF of ASME RTP-1 2019

where

$$M = 0.25(3 + \sqrt{R_c/r})$$

$$R_c = D_c/(2 \cos \alpha)$$

and $r \geq 3t_k$. A larger knuckle radius may be used, or Subpart 3B calculations may be applied to demonstrate adequacy of knuckle design.

The minimum total knuckle reinforced thickness, t_{kr}, shall be

$$t_{kr} = 2t_k \text{ or } 2t_c, \text{ whichever is greater}$$

For toriconical heads, compute the knuckle reinforcement length as follows:

$$L_c = \sqrt{\frac{D_i t_{kr}}{\cos \alpha}}$$

(b) Toriconical heads having a half apex angle, α, greater than 60 deg shall comply with Subpart 3B.

(c) For toriconical heads subject to internal loading, the knuckle radius shall be externally reinforced in accordance with Figure 3-1. The total reinforced knuckle thickness, t_{kr}, shall be calculated in accordance with the rule in (a). The thickness of a joint overlay near the knuckle radius tangent line of a toriconical head contributes to the knuckle reinforcement.

(d) When Subpart 3A design rules are used, the secondary bond overlays shall be in accordance with para. 4-320.

(e) Openings for bottom nozzles in toriconical heads are limited to 10% of the toriconical head diameter. Openings greater than 10% require special consideration and stress levels shall satisfy the limits of Subpart 3B.

3A-260 Minimum Thickness of Flat Bottom Heads

(a) The minimum thickness for fully supported flat bottom heads using Type I laminates, subject to hydrostatic pressure only, shall be as follows:

(1) 0.27 in. (6.9 mm) for inside diameters ≤72 in. (1 830 mm)

(2) 0.31 in. (7.9 mm) for inside diameters >72 in. (1 830 mm) to ≤96 in. (2 440 mm)

(3) 0.40 in. (10.2 mm) for inside diameters >96 in. (2 440 mm) to ≤144 in. (3 660 mm)

(4) See (c) for diameters over 144 in. (3 660 mm)

(b) The minimum thickness for fully supported flat bottom heads using Type II laminates, subject to hydrostatic pressure only, shall be as follows:

(1) 0.22 in. (5.6 mm) for inside diameters ≤72 in. (1 830 mm)

(2) 0.29 in. (7.4 mm) for inside diameters >72 in. (1 830 mm) to ≤96 in. (2 440 mm)

(3) 0.37 in. (9.4 mm) for inside diameters >96 in. (2 440 mm) to ≤144 in. (3 660 mm)

(4) See (c) for diameters over 144 in. (3 660 mm)

The thicknesses given in (1), (2), and (3) above have proven adequate to prevent damage during normal conditions associated with fabrication, handling, shipping, and installation.

(c) For inside diameters that exceed 144 in. (3 660 mm), design analysis shall be undertaken to establish a bottom thickness that will withstand the conditions in (b) above without resultant damage.

(d) The radius of the bottom knuckle of a flat bottom vessel shall not be less than 1.0 in. (25 mm) if the diameter is 48 in. (1 220 mm) or less, and 1.5 in. (38 mm) for diameters exceeding 48 in. (1 220 mm). The minimum thickness of the radius section shall be equal to the combined thickness of the shell wall and the bottom. The reinforcement of the knuckle radius area shall taper so that it is tangent with the flat bottom and shall not extend beyond the tangent line onto the tank bottom. The knuckle reinforced area shall extend for a minimum distance of 8.0 in. (200 mm) from the inside tank bottom up the vertical wall for tanks up to and including 48 in. (1 220 mm) in diameter, and 12.0 in. (300 mm) for tanks over 48 in. (1 220 mm) in diameter. The reinforcement shall then taper into the side wall for an additional length of 4.0 in. (100 mm) (see Figure 4-2). The perimeter of the tank bottom shall be a flat plane, and the bottom shall not have any projections that exceed 0.25 in. (6.0 mm) and that will prevent uniform contact with a flat support surface when the tank is filled with liquid. While Figure 4-2, sketches (a) and (d), show a joint line, it is permissible to fabricate the head integral with the shell (no joint required). This method of manufacture requires reinforcement of the knuckle radius area as described above [see Figure 4-2, sketch (c)].

(e) The design of flat heads that are unsupported by a foundation over their entire flat surface or are loaded by external pressure is not included in Subpart 3A. Such designs may be carried out using Subpart 3B rules. See Nonmandatory Appendix NM-13.

(f) The design of flat heads that are supported by a foundation over the entire flat surface and are loaded by internal pressure requires the use of hold-down lugs to prevent the vessel from lifting. The lugs and the knuckle shall be designed to withstand the moments induced because of uplift in addition to the other loads. The design factor for RTP components shall be 10 for pressure loading or 5 for pressure combined with wind, seismic, and other temporary loads, whichever governs. The size and number of the anchor bolts are part of the hold-down design. The depth and attachment of the anchor bolts to the concrete foundation, as well as the integrity of the foundation, are not considered part of the scope.

ASMENORMDOC.COM : Click to view the full PDF of ASME RTP-1 2019

(19) **3A-261 Flat-Bottom Knuckle Design**

(a) The flat-bottom knuckle details displayed in Figure 4-2 are empirically based and suitable for shop fabricated tanks. These details may be used in lieu of a calculation-based design for tanks up to 16 ft (4.9 m) in diameter.

(b) When the Fabricator elects to use a knuckle detail that differs from Figure 4-2, the knuckle must be designed by calculation.

(c) For tanks 16 ft (4.9 m) in diameter and above, the bottom knuckle must be designed by calculation.

(d) Knuckle design calculations must account for liquid pressure, design pressure uplift, foundation contact, knuckle thickness and radius, and discontinuities resulting from the knuckle-to-shell connection. A calculation method that may be used is axisymmetric finite element design with contact elements. The design criteria is strength-based for contact molded laminates and strain-based for filament wound laminates. For continuous loading, the design factors shall be 10 and 0.0010 in./in. (mm/mm) hoop direction, filament hoop laminates. For intermittent loading, the factors in para. 3A-440 shall be used.

(e) The Qualified Designer is responsible for recognizing the limitations of Figure 4-2 details and should give special consideration to tall tanks, high specific gravity contents, high design pressure, and combinations thereof.

3A-270 Minimum Thickness of Hemispherical Heads

For hemispherical heads under internal pressure, compute the minimum thickness, t, as follows:

$$t = PR_s/2S_a$$

where

P = design internal pressure, psi (MPa)
R_s = inside radius of head, in. (mm)
S_a = allowable stress, psi (MPa)

3A-300 DESIGN FOR EXTERNAL PRESSURE

3A-310 Cylindrical Shells

The maximum allowable external pressure between stiffening elements is computed by the following:

$$P_a = \frac{KD(0.853)\gamma E_{hf}^{3/4} E_{at}^{1/4} t^{5/2}}{(1 - \nu_{ah}\nu_{ha})^{3/4} L (D_o/2)^{3/2} FS}$$

where

D_o = outside diameter of shell, in. (mm)
E_{af} = axial flexural modulus, psi (MPa)
E_{at} = axial tensile modulus, psi (MPa)
E_{hf} = hoop flexural modulus, psi (MPa)
FS = design factor of safety = 5
KD = 0.84, a knockdown factor
= 1.0 for Type I and Type II laminates
L = design length of a vessel section, in. (mm), taken as the largest of the following

(a) the distance between head-tangent lines plus one-third the depth of each formed head, if there are no stiffening rings (excluding conical heads and sections)

(b) the distance between cone-to-cylinder junctions for vessels with cone or conical heads, if there are no stiffening rings

(c) the greatest center-to-center distance between any two adjacent stiffening rings

(d) the distance from the center of the first stiffening ring to the formed head tangent line plus one-third the depth of the formed head (excluding conical heads and sections), all measured parallel to the axis of the vessel

(e) the distance from the first stiffening ring in the cylinder to the cone-to-cylinder junction

P_a = allowable external pressure, psi (MPa)
t = wall thickness, in. (mm) (nominal)

$$Z_p = \frac{E_{hf}^{3/2} E_{at}^{1/2}}{E_{af}^2}(1 - \nu_{ah}\nu_{ha})^{1/2} \frac{L^2}{(D_o/2)t}$$

γ = reduction factor developed to better correlate theoretical predictions and test results
= $1 - 0.001Z_p$ if $Z_p \le 100$
= 0.9 if $Z_p > 100$
ν_{ah} = flexural Poisson's ratio in the axial direction ≈ $-S_{54}/S_{44}$, where S_{54} and S_{44} are terms in the inverted form of the laminate ABD stiffness matrix, S_{ij} (see para. M3-520)
ν_{ha} = flexural Poisson's ratio in the hoop direction ≈ $-S_{45}/S_{55}$

NOTES:

(1) For design without calculating the Poisson's ratios, the following apply:

(a) Type I Laminates. For an all Type I laminate, the flexural and in-plane Poisson's ratios for axial and hoop are identical. Setting these to zero produces about a 9% reduction in allowable pressure.

(b) Type II Laminates. For all Type II laminates with no liner, the flexural and in-plane Poisson's ratios are slightly different due to the 5/4 weave. Setting these to zero produces about a 5% reduction in allowable pressure. Setting the flexural and in-plane Poisson's ratio equal to the in-plane Poisson's ratios produces a <1% reduction in allowable pressure for standard Type II laminates. Any number of chopped strand mat plies may be added to the Type II laminate, so in the limit of an infinite number of Type I plies, the setting of the Poisson's ratios to zero produces the same result as the Type I laminates above.

ASMENORMDOC.COM : Click to view the full PDF of ASME RTP-1 2019

(c) Type X Laminates. For Type X laminates, the Poisson's ratios need to be calculated per laminate analysis or determined by testing.

(2) Nonmandatory Appendix NM-16 provides an example of the NASA SP-8007 solution for lateral and longitudinal pressure.

3A-320 Torispherical and Elliptical Heads

For torispherical heads, compute the allowable external pressure, P_a, as follows:

$$P_a = 0.36\left(E_f/F\right)(t/R_o)^2$$

For torispherical heads, compute the minimum thickness, t, as follows:

$$t = R_o\left(FP_d/0.36E_f\right)^{0.5}$$

For elliptical heads, compute the allowable external pressure, P_a, as follows:

$$P_a = 0.36\left(E_f/F\right)(t/K_oD_{oh})^2$$

For elliptical heads, compute the minimum thickness, t, as follows:

$$t = K_oD_{oh}\left(FP_d/0.36E_f\right)^{0.5}$$

where

D_{oh} = outside diameter of head, in. (mm)
E_f = flexural modulus of elasticity for head, psi (MPa)
K_o = factor depending on ellipsoidal head proportions as follows:

Major to Minor Axis Ratio	K_o
2.0	0.90
1.8	0.81
1.6	0.73
1.4	0.65
1.2	0.57
1.0	0.50

P_a = allowable external pressure, psi (MPa)
P_d = design external pressure, psi (MPa)
R_o = outside crown radius of head, in. (mm)

3A-330 Stiffening Rings

The required moment of inertia, I_s, of a circumferential stiffening ring, including the effective length of the shell and the added stiffener ring, for cylindrical shells under external pressure or internal vacuum shall not be less than that determined by the following formula:

$$I_s = PL_sD_o^3F/24E_h$$

where

D_o = shell outside diameter, in. (mm)
E_h = effective hoop modulus of shell and stiffener, psi (MPa)
F = design factor = 5
I_e = the calculated effective moment of inertia, in.^{4} (mm^4), considering the different moduli of the shell and stiffener and the resulting shift in neutral axis. I_e shall be greater than or equal to I_s.
I_s = moment of inertia, in.^{4} (mm^4), of stiffener and effective length of shell. The effective length of shell shall not be greater than the length of the shell under the ring plus no more than the length of the bending boundary layer (BBL) in the shell where the stresses are 50% of the peak values on each side of the centroid of the ring. See Nonmandatory Appendix NM-17 for the BBL formulation. Portions of shell shall not be considered as contributing to more than one stiffening ring.
L_s = one-half of the distance from the centerline of the stiffening ring to the next line of support on one side, plus one-half of the centerline distance to the next line of support on the other side of the stiffening ring, both measured parallel to the axis of the cylinder, in. (mm). A line of support is
(a) a stiffening ring that meets the requirements of this paragraph
(b) a circumferential line on a head at one-third the depth of the head from the head tangent line
(c) a cone-to-cylinder junction
P = actual external pressure, psi (MPa)

See Figure 4-7 for stiffener details and Nonmandatory Appendix NM-17 for example calculations. Other stiffener profiles meeting the required moment of inertia may be used.

3A-340 Top Head Loads

The top head, regardless of shape, shall be designed to support a 250 lb (1.11 kN) load on a 16 in.^{2} (10 300 mm^2) compact area without damage and with a maximum deflection of 0.5% of the shell diameter, or 0.50 in. (13 mm), whichever is less. For torispherical heads, this requirement can be satisfied by using the method presented in Nonmandatory Appendix NM-11.

3A-345 Fully Supported Flat-Bottom Heads Subject to External Pressure. Flat-bottom heads shall be designed so that, when subject to the external pressure(s)

(a) calculated stresses in the head do not exceed
(1) one-tenth of the ultimate strength(s) of the laminates employed for sustained loads
(2) one-fifth of the ultimate strength(s) of the laminates employed for intermittent loads combined with sustained loads and

ASMENORMDOC.COM : Click to view the full PDF of ASME RTP-1 2019

(b) upward deflection of the flat bottom resulting from the external load will not exceed 1½% of the diameter of the head for all external loading conditions

Liquid contents of the vessel shall not be considered to reduce stresses or deflection.

NOTE: Where rigid internal equipment is fitted on or close to the bottom, a lower deflection limit may be required.

(19) **3A-350 Toriconical Heads**

(a) For toriconical heads whose half apex angle, α, is ≤60 deg, the maximum allowable external pressure between stiffening elements is computed by the following:

$$P_a = \frac{K(E_{rc}/F)(D_o/L)[(t_s \cos\alpha)/D_o]^{2.5}}{1 - 0.45[(t_c \cos\alpha)/D_o]^{0.5}}$$

Also check for stress in the cone, S_c, as follows:

$$S_c = \frac{P_d D_c}{2t_c \cos\alpha}$$

The stress, S_c, must not exceed S_u/F.

For toriconical heads, compute the knuckle reinforcement length, L_c, as follows:

$$L_c = \sqrt{\frac{D_i t_{kr}}{\cos\alpha}}$$

The thickness of the knuckle, t_k, shall be

$$t_k = \frac{0.5MP_d R_c}{S_u/F}$$

where

D_i = inside diameter of the conical portion of a toriconical head at the point of tangency to the knuckle, measured perpendicular to the axis of the cone (see Figure 3-1), in. (mm)

D_c = $D_i - 2r(1 - \cos\alpha)$, in. (mm)

D_o = maximum outside diameter at the large end of the conical segment between stiffening elements (see Figure 3-1), in. (mm)

E_{ac} = axial tensile modulus for the cone, psi (MPa)

E_{hc} = hoop tensile modulus for the cone, psi (MPa)

E_{rc} = resultant modulus for the cone, psi (MPa) = $(E_{ac}E_{hc})^{0.5}$

F = design factor = 5

K = $4 - 0.75(E_{rc}/1{,}000{,}000)$ for U.S. Customary units = $4 - 0.75(E_{rc}/6\,900)$ for SI units

L = conical segment slant height (see Figure 3-1), in. (mm)

M = $0.25(3 + \sqrt{R_c/r})$

P_a = allowable external pressure, psi (MPa)

P_d = design external pressure, psi (MPa)

R_c = $D_c/(2 \cos\alpha)$

r = inside knuckle radius (see Figure 3-1), in. (mm) (6% minimum and at least three times the knuckle thickness)

S_u = ultimate tensile strength, psi (MPa)

t_c = cone thickness (see Figure 3-1), in. (mm)

t_k = knuckle thickness (see Figure 3-1), in. (mm)

α = one-half the apex angle in toriconical heads and sections (see Figure 3-1), deg

(b) When the half apex angle α exceeds 60 deg, the toriconical head shall be designed in accordance with Subpart 3B.

(c) For toriconical heads subject to external pressure, the knuckle radius shall be externally reinforced in accordance with Figure 3-1. The total reinforced knuckle thickness t_{kr} shall be calculated in accordance with the rule in (a). The thickness of a joint overlay near the knuckle radius tangent line of a toriconical head contributes to the knuckle reinforcement.

(d) When Subpart 3A design rules are used, the secondary bond overlays shall be in accordance with para. 4-320.

3A-360 Stiffening Rings

The required moment of inertia, I_s, of a circumferential stiffening ring for conical shells under external pressure shall not be less than that determined by the following formula:

$$I_s = \frac{P_d L_s (D_o/\cos\alpha)^3 F}{24E_{hs}}$$

where

E_{hs} = hoop tensile modulus for the stiffening ring, psi (MPa)

L_s = one-half of the conical segment slant distance from the centerline of the stiffening ring to the next line of support on one side, plus one-half of the conical segment slant distance from the centerline of the stiffening ring to the next line of support on the other side (see Figure 3-2), in. (mm). A line of support is

(a) a stiffening ring that meets the requirements of this paragraph

(b) a toriconical head-to-cylinder junction

(c) apex of a toriconical head

3A-400 SEISMIC, WIND, AND SNOW LOADINGS

3A-410 Design Loadings (19)

The loadings to be considered in designing vessels shall include seismic loads, wind loads, and snow loads, determined by vessel installation, location, and customer specification as defined in the UBRS. The effects of liquid

ASMENORMDOC.COM : Click to view the full PDF of ASME RTP-1 2019

Figure 3-2 Toriconical Head Dimensions for External Pressure

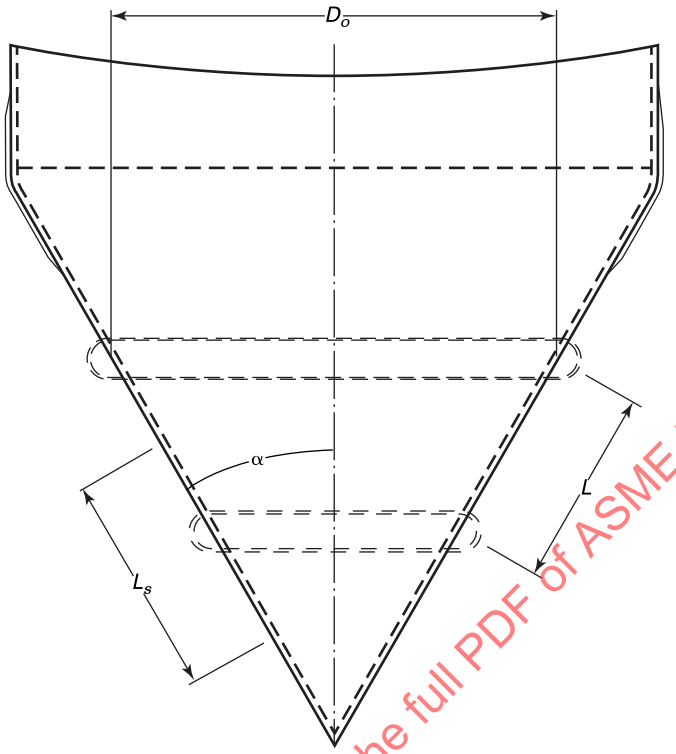

ASMENORMDOC.COM : Click to view the full PDF of ASME RTP-1 2019

sloshing in large vessels shall be considered. The design shall be certified by a Qualified Designer experienced in the design of reinforced plastics.

3A-420 Specifying Design Loadings

The magnitude and orientation of the forces enumerated in para. 3A-410 shall be as specified by the UBRS (see para. 1-200). Examples of codes and design calculations are shown in Nonmandatory Appendix NM-3.

3A-430 Assumed Design Loadings

The vessel design shall be analyzed under the following loading combinations:

(a) sustained loads plus seismic load
(b) sustained loads plus snow load
(c) sustained loads plus wind load
(d) wind loads on an empty vessel

Seismic, wind, and snow loads are considered to act separately. The forces are not cumulative.

3A-440 Stresses From Loadings

Stresses produced by seismic, wind, or snow loading, in conjunction with any appropriate working stresses, shall be less than $S_u/5$, a design factor of 5 for contact molded construction. For filament wound construction, the hoop strain shall be less than 0.0020 in./in. (mm/mm) and the axial stress shall be less than $S_u/5$.

3A-450 Loading Design Examples

Examples of wind and snow load design are given in Nonmandatory Appendix NM-3. The wind load calculations are for static loading only and do not consider the effect of stress buildup due to resonant vibrations, which may be a factor in tall structures. These examples are given to illustrate the extent of analysis necessary to verify the resistance of equipment to these loads. Other methods of analysis may be used, provided that all of the stresses induced by these loads are considered and satisfy the requirements of Part 3.

3A-460 Hold-Down Lugs

3A-461 General. Concentrated loadings resulting from hold-down lugs shall be calculated. A design method for hold-down lugs is given in Nonmandatory Appendix NM-4. When hold-down lugs are attached in the shop or in the field, the attachment of the hold-down lugs shall be performed by secondary bonders qualified in accordance with Mandatory Appendix M-5, and the vessel pressure test per para. 6-950 shall be performed after the attachment of the lugs. Final inspection per para. 6-900 shall be completed after the hold-down lug attachment and testing

have been completed. The Fabricator retains overall responsibility for all field work, testing, and inspection.

The hold-down lug shall be parallel to and above the datum plane for flat-bottom vessels as shown in Figure 4-9. Nonmandatory Appendix NM-4 suggests a minimum dimension of 0.50 in. (13 mm) between the datum plane and the bottom of the hold-down lug.

3A-462 Containment Area Flood Loading on Hold-Down Lugs

(a) When flooding is designated in the UBRS, hold-down lugs shall be designed to withstand uplift forces from flooding of the containment area.

(b) When the UBRS specifies that the bottom head and shell are not to be designed to withstand flooding of the containment area, the vessel nameplate or a separate label shall contain the following statement: "Bottom head and shell not designed for flooding of the containment area. Containment area flooding may result in damage and vessel leaks. Vessel must be inspected before being returned to service if containment area is flooded."

(19)

3A-500 LARGE DIAMETER RTP EQUIPMENT BODY FLANGES

Methods for designing flanges with full-face gaskets are given in Nonmandatory Appendices NM-2 and NM-12. Dimensions and allowable pressures for representative flanges with full-face gaskets are given in Table NM2-1. The maximum allowable design stress value shall be 3,000 psi (20.7 MPa) for flanges constructed of Type II laminates and 1,800 psi (12.4 MPa) for flanges constructed of Type I laminates.

3A-600 VESSELS SUPPORTED BY SHELL ATTACHMENTS

Where the vessel is supported by attachments to the shell, the attachments and associated reinforcement shall be designed to avoid exceeding allowable stresses both in the attachments and the shell. Attachments may be fabricated from RTP or metal as agreed upon by the User and the Fabricator.

The use of support lugs for vertical cylindrical vessels requires consideration of the forces caused by eccentric loading of the lugs. In small vessels, these radial forces may be accommodated by reinforcement of the shell. In vessels larger than 36 in. (910 mm) inside diameter, some type of a metallic ring–lug support should be used. A design method for metallic ring–lug supports is presented in Nonmandatory Appendix NM-5.

3A-700 REINFORCEMENT OF CIRCULAR OPENINGS

(a) Openings cut in cylindrical shells and heads for installation of nozzles and manways shall be reinforced by a circular area concentric with the cutout shown in Figures 4-4 and 4-5. Required patterns of reinforcement placement are shown in Figure 4-12.

(b) Only circular openings whose diameter does not exceed one-half of the vessel diameter are covered by these rules. Openings of other geometries and openings whose diameter exceeds one-half of the vessel diameter require special consideration and stress levels shall satisfy the limits of Subpart 3B.

(c) For circular nozzles, only openings with the largest dimension along one axis being no longer than two times the largest dimension along the axis 90 deg to the first axis are covered by these rules. These dimensions shall be measured from one cut edge to the opposite cut edge (the chord is measured in the hoop direction).

(d) These rules only cover reinforcement of cylinders and dished, elliptical, or conical heads using the thickness equations shown in Subpart 3A.

3A-710 Wall Thickness Definitions

T_a = actual structural wall thickness, in. (mm)
= wall thickness obtained after fabrication, not including any sacrificial corrosion barrier

T_c = calculated structural wall thickness, in. (mm)
= wall thickness planned on being used to fabricate the vessel; calculated by summing the theoretical thickness of each layer, not including any sacrificial corrosion barrier

T_t = theoretical structural wall thickness, in. (mm)
= minimum wall thickness that will satisfy the design conditions; does not include sacrificial corrosion barrier if it is specified

EXAMPLE: The design calculations establish that the wall thickness shall be at least 0.24 in. (6.1 mm) (T_t). A 0.29 in. (7.4 mm) (T_c) wall thickness is specified for fabrication. After fabrication, it is determined to be 0.32 in. (8.1 mm) (T_a).

D = vessel inside diameter, in. (mm)
d = nozzle's largest hole dimension, in. (mm)
K = 1 for nozzles ≥NPS 6 (DN 150)
= $d/6$ for nozzles <NPS 6 (DN 150)
M = 1 for Type I or II laminates
= $\sigma/15{,}000$ for Type X laminates, for U.S. Customary units
= $\sigma/103$ for Type X laminates, for SI units
T = vessel wall thickness, in. (mm)
t = nozzle wall thickness, in. (mm)
t_r = reinforcement thickness, in. (mm)
V = 1 for internal pressure
= ½ for external pressure
σ = hoop tensile ultimate strength for cylinders, psi (MPa)

ASMENORMDOC.COM : Click to view the full PDF of ASME RTP-1 2019

= tensile ultimate strength for heads, psi (MPa)

3A-720 Reinforcement Diameter

The outer diameter of the opening reinforcing laminate, d_r, shall not be less than two times the opening's largest dimension. For openings with largest dimension less than 6.0 in. (150 mm), the minimum opening reinforcement diameter, d_r, shall be the largest dimension plus 6.0 in. (150 mm).

The reinforcing diameters, d_r, of two openings shall not overlap.

(19) ### 3A-730 Reinforcement Thickness

(a) Reinforcing materials shall always be Type II, except Type I reinforcing can be used on Type I laminates.

(b) T_a over and above T_c shall not be considered to have reinforcing value.

(c) When t_r < 0.13 in. (3.3 mm), no reinforcing is required.

(d) $t_r = VMKT_t - M(T_c - T_t)$.

(e) Opening reinforcement thickness that must be added to the wall may be applied to the outer or inner surfaces, or be divided between them as shown in Figure 4-12. Beyond the limits of d_r, the added opening reinforcement thickness shall be tapered onto the shell.

3A-800 SECONDARY BOND SHEAR STRESS

The ultimate secondary bond shear stress is 2,000 psi (13.8 MPa).

SUBPART 3B
DESIGN BY STRESS ANALYSIS

(19) ### 3B-100 INTRODUCTION

Either vessel or vessel part may be designed using the stress analysis methods listed in this subpart. The Subpart 3B design process consists of two steps: (1) the biaxial stress analysis shall be performed at points of concern as determined by the Qualified Designer, and (2) the stress analysis results of the vessel or vessel part shall fall within the limits established by para. 3B-500.

Various methods may be used to determine the biaxial stress state in the laminate. These methods are

(a) the stress analysis methods of Nonmandatory Appendix NM-13 that are adapted from Section VIII, Division 2 of the ASME Boiler and Pressure Vessel Code

(b) the finite element method

(c) closed form solutions that yield the complete biaxial state of stress

(d) back calculation of the biaxial state of stress using strain gage data

(e) other mathematical and/or experimental techniques, provided they are as accurate or as conservative, in the opinion of the Qualified Designer, in determining the biaxial state of stress as those listed above

The stress criteria are different because of the brittle behavior of RTP compared with steel and other ductile metals, and because of the anisotropic behavior of filament wound and other laminates containing continuous roving.

3B-200 DESIGN ACCEPTABILITY

The requirements for the acceptability of a design are

(a) the design shall be such that the stress shall not exceed the limits described in the stress criteria in para. 3B-500

(b) for configurations that involve external pressure or other loads defined in para. 3B-300, the load shall not exceed one-fifth of the critical buckling load

3B-210 Basis for Determining Stresses

The equivalent stress ratio at any point in a vessel is the value of stress ratio deduced from the stress condition at the point by means of a theory of failure. The theory of failure used in the rules of this subpart for combining stresses is the quadratic interaction criterion. It is applicable to the most general combination of isotropic and anisotropic lamina allowed by this Standard. The stress analysis and evaluation shall include the directional properties of the laminate and individual lamina and shall take into account the primary and secondary stresses caused by gross structural discontinuities.

3B-220 Terms Relating to Stress Analysis

Terms used in this subpart relating to stress analysis are defined as follows:

(a) *Gross Structural Discontinuity*. A gross structural discontinuity is a source of stress or strain intensification that affects a relatively large portion of a structure and has a significant effect on the overall stress or strain pattern or on the structure as a whole.

Examples of gross structural discontinuities are head-to-shell and body-flange-to-shell junctions, and junctions between shells of different diameters or thicknesses.

(b) *Load Stress*. A load stress is a stress that results from the application of a load, such as internal pressure or the effects of gravity, as distinguished from thermal stress.

(c) *Local Primary Membrane Stress*. Cases arise in which a membrane stress produced by pressure or other mechanical loading and associated with a primary and/or a discontinuity effect would, if not limited, produce excessive distortion in the transfer of load to other portions of the structure. Such stresses are termed local primary membrane stress.

ASMENORMDOC.COM : Click to view the full PDF of ASME RTP-1 2019

An example of a local primary membrane stress is the membrane stress in the shell produced by external load and moment at a permanent support.

(d) Membrane Stress. The membrane stress is defined as the component of normal stress which is uniformly distributed and equal to the average value of stress across the thickness of the section under consideration.

(e) Moment Resultant. The intersection of the reference surface and the section under consideration defines an intersection line. The moment resultant is the moment of the normal stress about the intersection line. It is the bending moment per unit length in the laminate. (See Mandatory Appendix M-3, Figure M3-1.) The location of the reference surface is chosen by the engineer. The reference surface used to define the stress resultants shall be the same as that used to compute stiffness coefficients.

(f) Normal Force Resultant. The normal force resultant is the resultant force of the normal stresses in all the lamina at the section under consideration.

(g) Normal Stress. The normal stress is the component of stress normal to the plane of reference. Usually the distribution of normal stress is not uniform through the thickness of a lamina. The stress is considered to be made up of two components, one of which is uniformly distributed and equal to the average value of the stress across the lamina of the section under consideration, and the other of which varies with the location across the lamina.

(h) Off-Axis Coordinates. The off-axis coordinates are coordinates chosen by the engineer. They coincide with the vessel coordinates (see Figure M3-4).

(i) On-Axis Coordinates. The on-axis coordinates are a collection of sets of axes, one for each lamina. The *x*-axis of a set is aligned with the reinforcement, and the *y*-axis is perpendicular to the *x*-axis and lies in the plane of the lamina. The *x*-*y* axes or on-axis systems are also called the *principal material axis systems* (see Figure M3-4).

(j) Primary Stress. A primary stress is a normal stress or a shear stress developed by the imposed loading. It is necessary to satisfy the laws of equilibrium of external or internal forces and moments.

The basic characteristic of a primary stress is that it is not self-limiting. Primary stresses that considerably exceed the stress at onset of cracking will result in failure or at least in gross distortion. A thermal stress is not classified as a primary stress.

Examples of primary stress are

(1) the general membrane stress in a circular cylindrical or a spherical shell due to internal pressure or distributed live loads

(2) the bending stress in the central portion of a flat head due to pressure

(k) Reference Surface. The reference surface is a surface that is parallel to the lowermost surface of the laminate. The distance from the lowermost surface is chosen by the engineer. Common choices are the surface midway between the outermost and innermost laminate surfaces or the neutral bending surface (see para. M3-200). In the case of symmetric laminates, these choices coincide.

(l) Shear Force Resultant. The shear force resultant is the resultant force of the shear stresses in all the lamina at the section under consideration. It is the shear force per unit length in the plane of the laminate.

(m) Shear Stress. The shear stress is defined as the component of stress tangent to the plane of reference.

(n) Secondary Stress. A secondary stress is a normal stress or a shear stress developed by the constraint of adjacent parts or by self-constraint of a structure. The basic characteristic of a secondary stress is that it is self-limiting. Local inelastic deformation and minor distortions can satisfy the conditions that cause the stress to occur.

Examples of secondary stress are

(1) general thermal stress

(2) bending stress at a gross structural discontinuity

(o) Strength Ratio. The strength ratio is defined as the lowest value by which each component in the stress state at a point could be multiplied so that the multiplied stress state would violate the failure criterion in para. 3B-500.

(p) Thermal Stress. A thermal stress is a self-balancing stress produced by a nonuniform distribution of temperature or by adjoining parts with different thermal coefficients of expansion. Thermal stress is developed in a solid body whenever a volume of material is prevented from assuming the size and shape that it normally would under a change in temperature.

(q) Twisting Moment Resultant. At each point along the intersection of the reference surface and a section under consideration, the twisting moment resultant is the moment of the shear stress about the point (see Figure M3-1).

(r) Closed Form Solution. A closed form solution is a mathematically exact solution or series of equations that accurately describes the state of stress without being based on empirical data.

3B-300 LOADING

All vessels shall be designed to resist the hydrostatic load. Top heads, or other surfaces where personnel might walk, shall be designed to support a 250 lb (1.11 kN) load on a 16 in.^{2} (10 300 mm^2) compact area without exceeding the stress criteria of para. 3B-500, and with a deflection ≤ 0.5% of the vessel diameter or width.

Vessels shall also be designed to withstand the following load combinations without violating the criterion of para. 3B-500. The magnitude of each of the loads is defined by the UBRS (see para. 1-200) as follows:

(a) internal pressure above the liquid contents, superposed on the hydrostatic pressure.

ASMENORMDOC.COM : Click to view the full PDF of ASME RTP-1 2019

(b) loads on support ring or lugs from the vessel weight, the contents weight, and imposed loads.

(c) external pressure.

(d) seismic load, which shall be considered as acting at the same time as the hydrostatic and pressure loads, but not simultaneous with maximum wind loads. The vessel shall resist the seismic loads without exceeding the criteria of para. 3B-500, as required by local codes. (See Nonmandatory Appendix NM-3.)

(e) loads from attachments, such as ladder clips, agitators, and lifting lugs.

(f) loads from internal parts, such as baffles and packing supports.

(g) load on nozzles due to flow forces and pressure (as in the case of manways and other nozzles with blind flanges).

(h) loading that results from thermal expansion, and stresses caused by thermal gradients.

(i) snow loads, which shall be considered as acting at the same time as the hydrostatic and pressure loads, but not simultaneous with seismic or wind loads.

(j) wind load, which shall be considered as acting at the same time as the hydrostatic and pressure loads, but not simultaneous with seismic or snow loads.

(k) wind load on an empty vessel.

(l) loadings due to the temporary oblation of circular shell sections.

(m) any other combination of loads specified in the UBRS.

3B-400 DESIGN

The stress distribution, at all the critical points on the vessel, shall be calculated for the specified loading combination, or other combinations of loads, that produces the most severe stress condition.

The stress components from different types of loads that may be applied simultaneously are summed algebraically.

The design factor is calculated at each critical point on the vessel using the procedures of Mandatory Appendix M-3.

3B-500 STRESS CRITERIA

For all loading conditions specified in para. 3B-300, and load combinations, the following strength ratios shall be used unless otherwise indicated in this Standard for specific loading conditions. The strength ratio in the inner surface and interior layer shall be as follows:

(a) For all vessels that are designed using combinations of Subparts 3A and 3B, the minimum strength ratio shall be 10.

(b) For all vessels that are designed entirely by Subpart 3B, the minimum strength ratio shall be 9.

(c) For all vessels that are designed entirely by Subpart 3B and for which an acoustic emission examination by Mandatory Appendix M-8 is performed, the minimum strength ratio shall be 8.

(d) For all vessels designated for critical service, the minimum strength ratios in (a) through (c) above shall be multiplied by 1.25.

The minimum strength ratio in each layer in the rest of the laminate for each combination of loads shall be 1.6 for vessels not in critical service and 2 for vessels in critical service.

For wind and seismic loads, and for combinations of wind and seismic loads with sustained loads, the strength ratios in (a), (b), (c), and in the preceding paragraph may be divided by 1.2.

Individual layers often have different elastic moduli due to the type and/or orientation of the reinforcement. At the same level of strain, the stress in these layers will be different. The strength ratio used for design in Subpart 3B is calculated for each layer, whereas the design factor used in Subpart 3A is based on the ultimate strength of the entire laminate.

If the strength ratio of any layer of the laminate is less than 1.6, then the designer must recognize and account for the possibility of reduced mechanical properties in the laminate.

(e) For loadings due to temporary oblation, the design factor shall be greater than or equal to 3.0, and the criterion for strength ratios of the laminate layers shall be as follows:

(1) The interior mat layers shall be greater than or equal to 3.0.

(2) The strength ratio of C-veil inner layers shall be greater than or equal to 3.0.

(3) The strength ratio of synthetic veil inner layers shall be greater than or equal to 2.0 when the veil is in tension and greater than or equal to 3.0 when the veil is in compression.

(4) The strength ratio of the structural layers shall be greater than or equal to 1.5, with the exception of axially oriented fiber layers that may be less than 1.0. Microcracking shall be permitted only in axially oriented fiber layers.

3B-600 EXTERNAL PRESSURE

The stress distribution resulting from external pressure shall satisfy the criteria of para. 3B-500. In addition, to ensure elastic stability, the calculated buckling pressure of the vessel shall be at least five times the design external pressure. For dished heads and cylindrical shells fabricated of Type I or II laminates, the rules of para. 3A-300 may be used to calculate the allowable external pressure, satisfying the requirement for elastic stability.

ASMENORMDOC.COM : Click to view the full PDF of ASME RTP-1 2019

Many vessels are constructed with Type X laminates that may be anisotropic. Anisotropy can have a strong influence on elastic stability and must be taken into account in design calculations.

3B-700 ATTACHMENTS

Attachments may be designed by stress analysis or by Subpart 3A rules. If they are designed by Subpart 3A rules, they shall satisfy the lower allowable stresses of Subpart 3A.

ASMENORMDOC.COM : Click to view the full PDF of ASME RTP-1 2019

Part 4
Fabrication

4-100 SCOPE

Part 4 sets forth fabrication details that are used in conjunction with the design rules and procedures of Part 3. Figures 4-1 through 4-6 are required only when Subpart 3A design rules are used. Figure 4-7 is an optional stiffener detail, and Figure 4-8 is an optional skirt attachment detail. All other figures and tables in Part 4 are required to be used in conjunction with the design rules of Subparts 3A and 3B. Where complete details are not given, it is intended that the Fabricator shall provide details of design and construction that shall be as safe as those provided by the rules of this Standard.

(19) **4-110 Fabrication Requirements**

All fabrication shall satisfy all requirements of the User's Basic Requirements Specification and the Fabricator's Design Report using the fabrication procedures of Part 4 and drawings certified by the Qualified Designer prior to application of the ASME Certification Mark with RTP Designator.

(19) **4-115 Overlay Taper Length**

The edges of all overlays shall have a minimum taper length of 4 times the thickness.

4-120 Large Diameter Fabrication Details

For vessels over 16 ft (4.9 m) inside diameter, the fabrication details given in Part 4 may be modified as long as the design loadings and stresses meet the requirements of Part 3B. The tolerances given in Part 4 shall be modified as follows: Maximum out-of-roundness shown in Figure 4-9 shall not exceed ±1% of the inner diameter for diameters up to and including 16 ft (4.9 m). For diameters greater than 16 ft (4.9 m), the maximum tolerance shall be ±1% of the radius. In no case shall the tolerance exceed 2 in. (50 mm) on the radius, unless agreed to by the purchaser in the UBRS. Offset joints shall be ground or filled with reinforced resin putty and/or mat to a minimum taper of 4:1. Maximum putty thickness shall not exceed ½ in.(13 mm). Joint width shall be increased by the width of the putty, if used. Oblated shell sections shall not contain any secondary bonds except for minor repair areas for the inner surface and interior layer.

4-200 LARGE DIAMETER BODY FLANGES

Body flanges shall be flat and true to a required tolerance given in Table 4-1. If machining of the flange face is required, the machined surface shall have the original corrosion barrier restored and sealed with resin. All bolt holes shall be back spot-faced for ASME B18.21.1 Type A Narrow washers. Bolt holes and spot facing shall be resin coated. Overall machine facing of the back of flanges in lieu of spot facing is permitted, provided the hub is not undercut.

4-300 SHELL JOINTS

4-310 Shell-to-Shell Joints

Shell-to-shell joints shall be of either butt or bell-and-spigot construction as shown in Figure 4-3. No longitudinal shell joints are permitted.

4-320 Type I and Type II Secondary Bond Overlays (19)

Secondary bond overlays shall comply with (a) through (f) below.

(a) All cured laminate surfaces to be overlayed shall be roughened with 36 grit size abrasive medium or coarser for external surfaces and 60 to 80 grit size abrasive medium for the final internal surface preparation.

(b) The thickness of the overlay shall be the thickness required for an equivalent hand lay-up laminate regardless of the type laminate being joined. A Type II laminate structure, as shown in Table 2A-2, shall be used for overlays of Type II laminates. Type I laminate overlays, as shown in Table 2A-1, shall be used when making Type I laminate joints.

(c) The joint overlay to Type I contact molded laminates shall consist of chopped strand mat plies only. The number of plies shall be not less than the number of structural plies for the structural portion of the thickest laminate being joined or 0.22 in. (5.6 mm) minimum. The first ply shall have a minimum width of 3 in. (75 mm). Each successive ply shall overlap the preceding ply by $^{5}/_{16}$ in. (8 mm) minimum on each side.

(d) The joint overlay for Type II contact molded laminates and for filament wound laminates shall consist of alternate plies of mat and woven roving equivalent to the structural portion of the thickest Type II laminate being joined or 0.22 in. (5.6 mm) minimum. Minimum

ASMENORMDOC.COM : Click to view the full PDF of ASME RTP-1 2019

ply width shall be 3 in. (75 mm). The woven roving shall not be greater in width than the layer of chopped strand mat it follows. Each successive mat ply shall extend ½ in. (13 mm) minimum beyond each side of the preceding mat ply.

(e) The corrosion-resistant overlay shall consist of a minimum of three plies, each of 1.5 oz/ft^2 (450 g/m^2) chopped strand glass mat, with a minimum of one ply of surfacing veil on the surface exposed to the process environment. The minimum ply width shall be 3 in. (75 mm), with each successive layer of mat extending ½ in. (13 mm) minimum beyond each side of the preceding ply, followed by the surfacing veil extending ½ in. (13 mm) minimum beyond each side of the last ply of 1.5 oz/ft^2 oz (450 g/m^2) mat.

(f) Following gel and peak exotherm of the overlay, a paraffinated top coat of resin shall be applied over the surfacing veil and the adjacent roughened surface.

(g) The overlay width and thickness that result from using (c) and (d) above apply only to the following joints: torispherical head to shell, ellipsoidal head to shell, the joints shown in Figure 4-2, cylindrical shell to cylindrical shell, and joints in the flat portion of a fully supported flat bottom. Nozzle installation overlays shall satisfy all the requirements of para. 4-430. For other overlay joints, the width and thickness shall be as determined by the Qualified Designer, and the joint design shall be as safe as those provided by the rules of this Standard.

4-330 Alternative Secondary Bond Overlays

(a) Joints shall be constructed by any qualified fabrication method.

(b) The overlay strength for the joint shall be based on a design basis laminate.

(c) The structural layers may be included in the exterior overlay or the interior overlay. When structural layers are included in the interior overlay, they are to be covered with a corrosion-resistant overlay per para. 4-320(e). The minimum exterior structural joint overlay thickness shall be 0.22 in. (5.6 mm).

CAUTION The potential for chemical attack must be considered by the designer when a portion of the structural overlays are included in the interior overlay.

(d) The structural thickness of the joint shall satisfy the design conditions and shall be sufficient to withstand the stresses incurred by the joint, including but not limited to stresses from occasional loads such as wind, earthquake, or lifting and handling. Consideration shall be given to the effect of the joint design on the stability of the shell.

(e) The minimum overlay width shall be 6-in. (152-mm) full thickness plus 4:1 minimum tapers specified in Figure 4-3.

(f) The width of the overlay shall be sufficient to provide average secondary bond shear strength at least equal to the axial tensile strength of the weaker part.

(g) Average secondary bond shear stress shall not exceed 200 psi (1.4 MPa).

(h) The minimum axial and hoop tensile strengths of the overlay shall be 9,000 psi (62 MPa).

(i) The layer adjacent to the bond surface shall be a minimum of 0.75-oz/ft^2 (225-g/m^2)mat or randomly chopped glass.

(j) Joint laminate sequencing, if interrupted, shall be stopped with an exothermic layer of mat or randomly chopped glass and must be resumed with mat or randomly chopped glass.

(k) The corrosion-resistant overlay shall satisfy all the requirements of paras. 4-320(e) and 4-320(f).

4-400 FLANGED NOZZLES

4-410 Fabricating Flanged Nozzles

All flanged nozzle necks may be fabricated by the hand lay-up or filament wound methods using Type I, II, or X laminates and in accordance with Figure 4-10(a) [Figure 4-10(b)] and Figure 4-11 and installed per Figures 4-4 through 4-6 and 4-12. The thickness of nozzle necks given in Figure 4-10(a) [Figure 4-10(b)] shall be the minimum thickness for all types of laminate construction used. In addition, if a filament wound laminate is used to fabricate the nozzle neck, the laminate properties shall be at least equivalent to those of a Type II hand lay-up laminate of equal thickness in both the hoop and axial directions. Nozzle flanges shall only be fabricated by the hand lay-up method using Type I or II laminates and in accordance with Figure 4-10(a) [Figure 4-10(b)] and Figure 4-11. The nozzle shall extend 6 in. (150 mm) from the outside diameter of the shell to the nozzle-flange face unless otherwise specified. Nozzles up to and including NPS 4 (DN 100) shall be gusseted per Figure 4-13.

Other gasket materials or flange dimensions than those given in Figure 4-10(a) [Figure 4-10(b)] are permissible provided the following are met:

(a) The neck thickness requirements of Figure 4-10(a) [Figure 4-10(b)] are met.

(b) The flange satisfies the requirements of Nonmandatory Appendix NM-2, Nonmandatory Appendix NM-12, or Subpart 3B.

(c) If the nozzle will be subjected to pressures greater than 50 psig (345 kPag), in addition to (b) above, the nozzle neck thickness shall be the greater of the thickness in Figure 4-10(a) [Figure 4-10(b)] or that resulting from design by Subpart 3B or Nonmandatory Appendix NM-12.

4-420 Bolt Holes

All bolt holes shall be back spot-faced for washers in accordance with Figure 4-10(a) [Figure 4-10(b)]. Bolt holes and spot facing shall be resin coated. Overall machine facing of the back of flanges in lieu of spot facing is permitted, provided the hub is not undercut.

ASMENORMDOC.COM : Click to view the full PDF of ASME RTP-1 2019

4-430 Installation of Nozzles

The laminates used to install a nozzle or manway shall be made by the hand lay-up method using Type I or II laminates in accordance with Figures 4-4 through 4-6 and 4-12 (see also Tables 4-2 and 4-3).

(a) If the vessel section is of filament wound construction, the reinforcement laminate shall be of a Type II construction.

(b) If the vessel section is of filament wound construction, the attachment laminate shall be of a Type II construction for nozzles NPS 6 (DN 150) and above in size. For nozzles below NPS 6 (DN 150) in size that are gusseted in accordance with Figure 4-13, the attachment laminate may be of Type I or II construction for any type of vessel section laminate where the nozzle is located.

(c) Where plate gussets are installed in accordance with Figure 4-13, all nozzle reinforcement and attachment laminates shall be installed before the installation of the gussets.

(d) Circular openings in shells and heads for the purpose of installing nozzles shall be cut within the following tolerances:

(1) maximum gap of $^{3}/_{16}$ in. (5 mm) for nozzles NPS 12 (DN 300) and smaller

(2) maximum gap of $^{1}/_{4}$ in. (6 mm) for nozzles greater than NPS 12 (DN 300) and smaller than NPS 24 (DN 600).

(3) maximum gap of $^{3}/_{8}$ in. (10 mm) for nozzles NPS 24 (DN 600) and greater

(e) Where necessary to meet the required tolerance, additional laminate shall be applied to the nozzle neck outside diameter, prior to assembly.

(f) Corners in rectangular openings and exterior corners of rectangular nozzles shall have a minimum radius of three times the nozzle neck thickness.

(g) All openings shall be cut with a smooth profile to avoid stress concentrations (cuts, square corners, etc.) in the perimeter of the opening.

4-500 MANWAYS

4-510 Diameter

Manways shall have a minimum size of NPS 20 (DN 500). Manway dimensional requirements are as shown in Table 4-2.

4-520 Installation

The installation of a manway shall comply with the requirements given for nozzles.

4-530 Bolt Holes

All manway flange bolt holes shall be back spot-faced for ASME B18.21.1 Type A narrow washers. Bolt holes and spot facing shall be resin coated. Overall machining of the back of manway flanges in lieu of spot facing is permitted, provided the hub is not undercut.

4-600 REINFORCEMENT OF CUTOUTS

When reinforcing materials are cut to facilitate placement around an installed nozzle, joints in successive reinforcing layers shall be staggered to avoid overlapping and, on cylindrical shells, shall not be placed so that the joints are parallel to the axis of the cylinder.

4-700 TOLERANCES

Required fabrication tolerances are given in Figures 4-3, 4-9, and 4-14, sketches (a) through (c). Flange face drawback and/or waviness shall not exceed the values listed in Table 4-1 as measured at or inside the bolt circle. Reverse drawback shall be limited to $^{1}/_{64}$ in. (0.4 mm), measured at the inside of the flange using the outside of the flange as a reference point.

4-800 BALSA WOOD CORED PLATES

Balsa wood cored plates shall be limited to flat panel designs fabricated using Type I, II, or X laminate with balsa wood that meets the requirements of Mandatory Appendix M-13. The following applies to fabrication with balsa wood cored plates:

(a) Minimum laminate thickness per side of balsa wood core laminate shall be 0.22 in. (5.6 mm).

(b) At least one layer of 1.5 oz/ft^2 (450 g/m^2) chopped strand mat shall be placed on each side, between the balsa wood core and the structural laminate, to ensure proper bond.

(c) Balsa wood core laminates shall use only end-grain core.

(d) Core thicknesses greater than 2 in. (50 mm) shall be layered in up to 2-in. (50 mm) increments with at least one layer of 1.5 oz/ft^2 (450 g/m^2) chopped strand mat between balsa wood layers to ensure proper bond between layers, with the following exception: For a tapered sloped bottom that is greater than 2 in. (50 mm) thick, a single machined layer of full-thickness balsa may be used.

(e) A typical flat cored bottom knuckle detail is shown in Figure 4-15.

(f) A design method for flat cored plates subject to internal or external pressure is given in Nonmandatory Appendix NM-15.

ASMENORMDOC.COM : Click to view the full PDF of ASME RTP-1 2019

Figure 4-1 Torispherical Heads

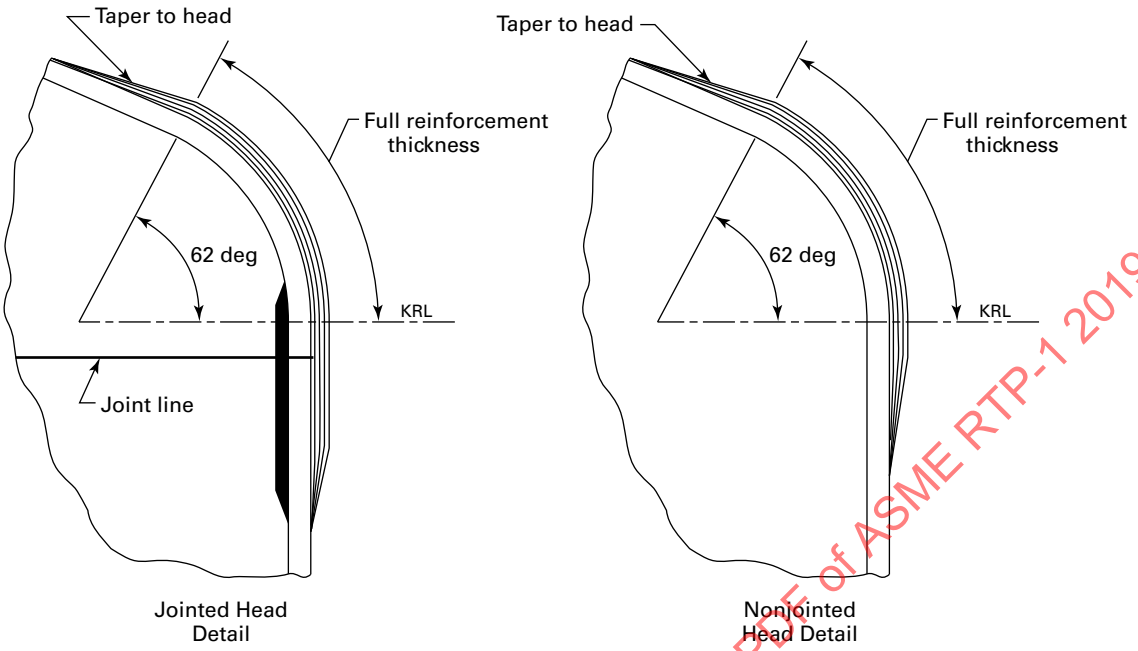

(a) Torispherical Head Subject to Internal Loading

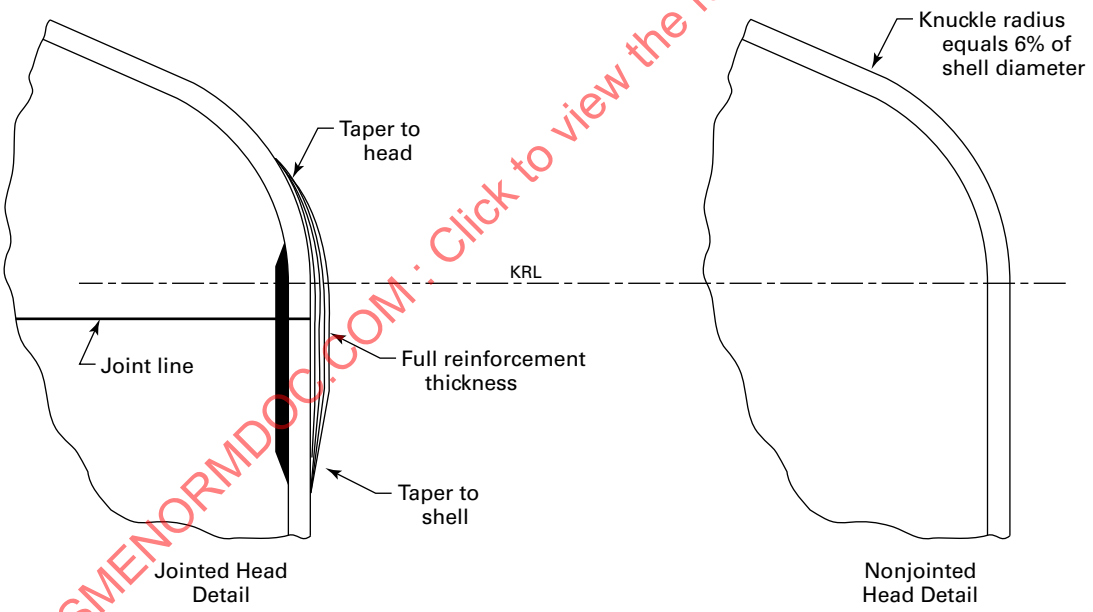

(b) Torispherical Head Not Subject to Internal Loading

ASMENORMDOC.COM : Click to view the full PDF of ASME RTP-1 2019

Figure 4-2 Flat-Bottom Tank Knuckle Detail

Vessel Diameter, in. (mm)	*R*, min., in. (mm)	*L*, min., in. (mm)	*M*, min., in. (mm)
48 (1200) and under	1 (25)	8 (200)	3 (75)
Over 48 (1200)	$1^1/_2$ (40)	12 (300)	4 (100)

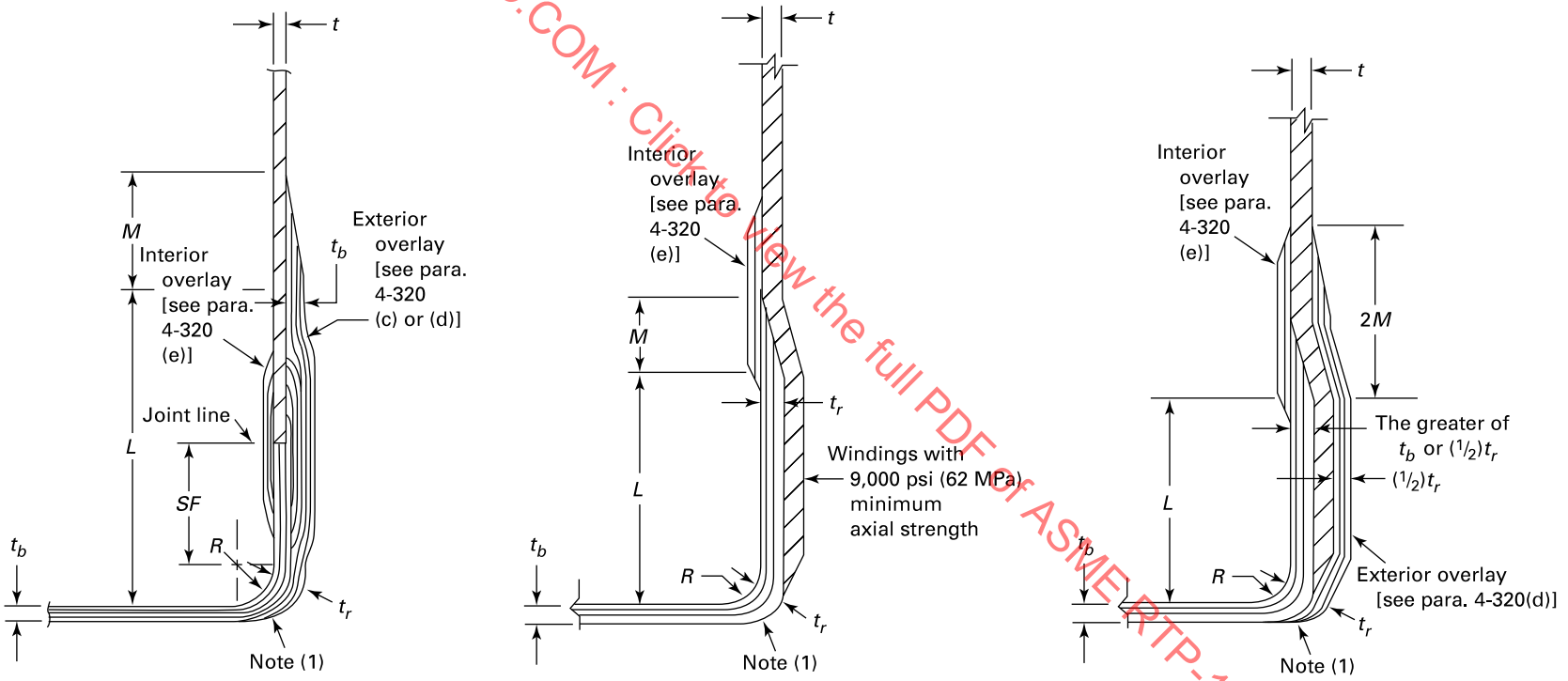

(a) Joined Head to Filament-Wound Shell

(b-1) Integral Head to Filament-Wound Shell

(b-2) Integral Head to Filament-Wound Shell

ASMENORMDOC.COM : Click to view the full PDF of ASME RTP-1 2019

Figure 4-2 Flat-Bottom Tank Knuckle Detail (Cont'd)

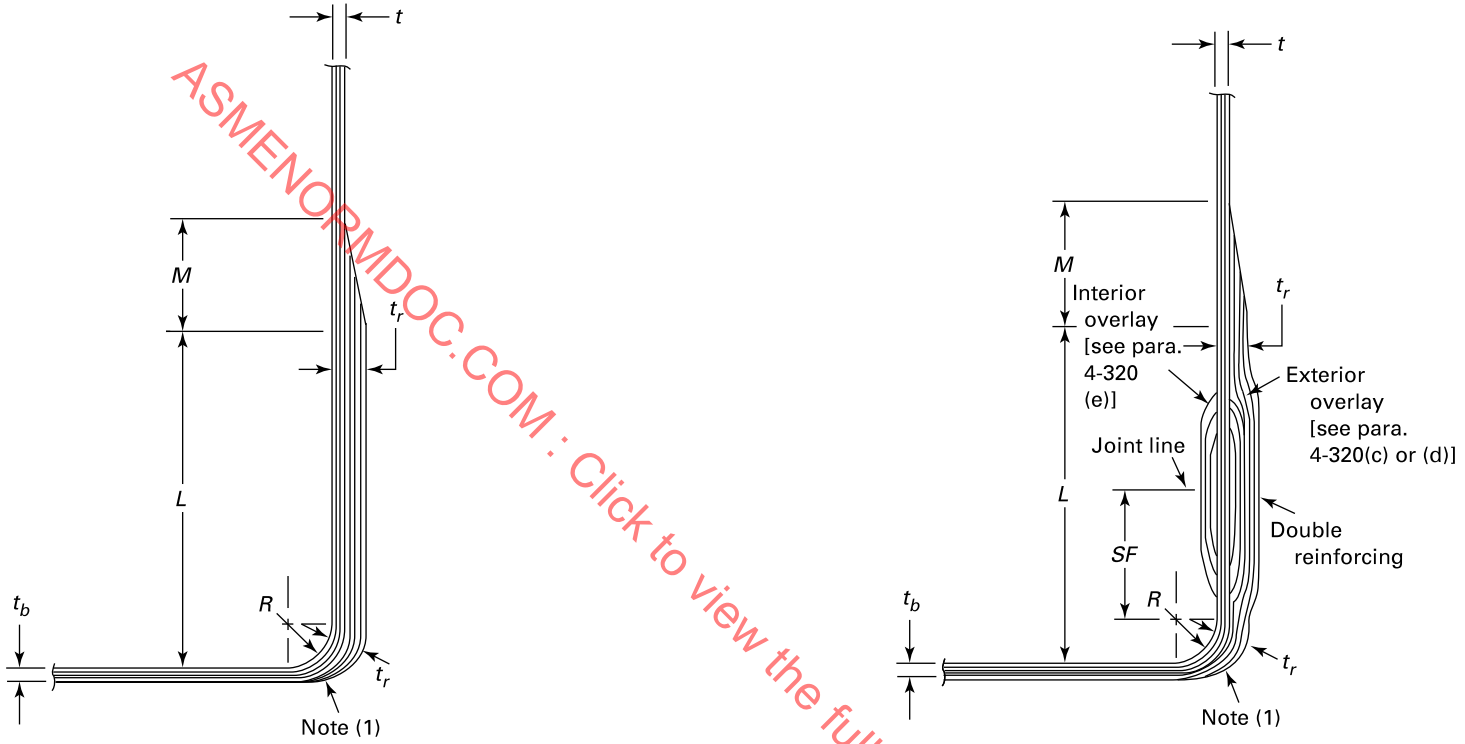

(c) Integral Head to Hand Lay-Up Shell

(d) Joined Head to Hand Lay-Up Shell

L = length of double reinforcement
M = length of thickness transition (taper)
R = inside corner radius
SF = straight flange of bottom head

t = shell thickness
t_b = bottom thickness
t_r (min.) = $t + t_b$

GENERAL NOTE: These details are to be used in compliance with the provisions of para. 3A-261.

NOTE: (1) Projections beyond flat plane shall not exceed ¼ in. (6 mm).

ASMENORMDOC.COM : Click to view the full PDF of ASME RTP-1 2019

Figure 4-3 Joint Arrangement

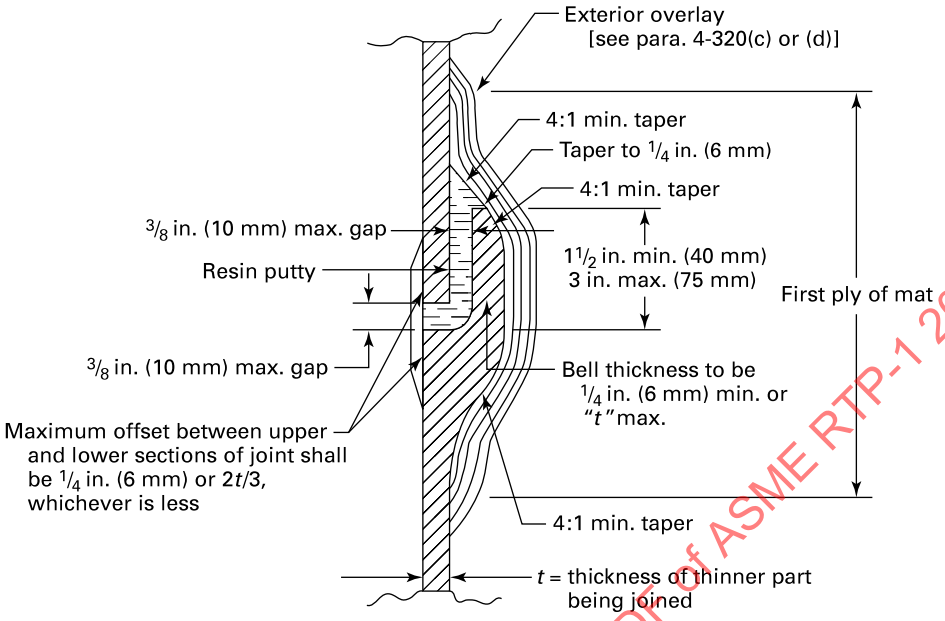

(a) Tolerances for Bell and Spigot Joints

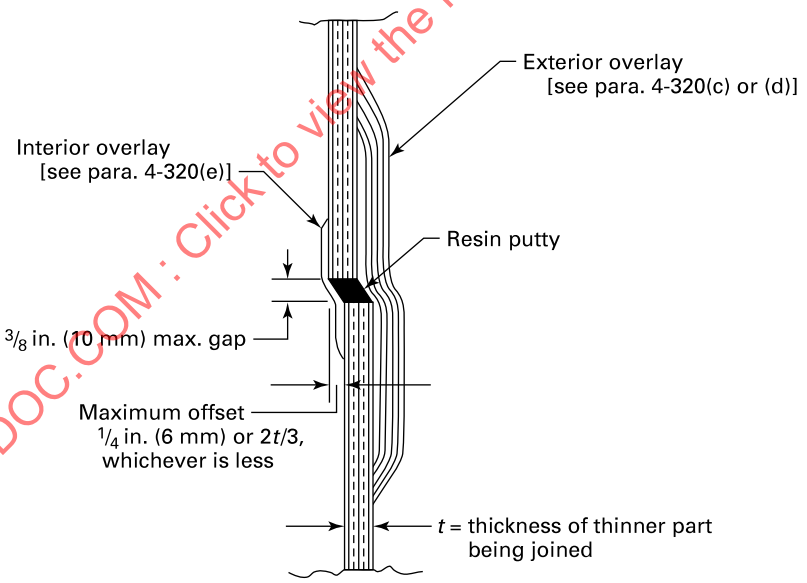

(b) Tolerances for Butt Joints

GENERAL NOTE: The use of putty should be kept to a minimum and used only to fill gaps and offsets, and not be used to fill depressions on the shell. Use of putty may create excessive noise during acoustic emission testing. Taper of the structural portion may be desired to minimize structural discontinuities, such as the case of high axial loading applications.

ASMENORMDOC.COM : Click to view the full PDF of ASME RTP-1 2019

Figure 4-4 Flush Nozzle Installation

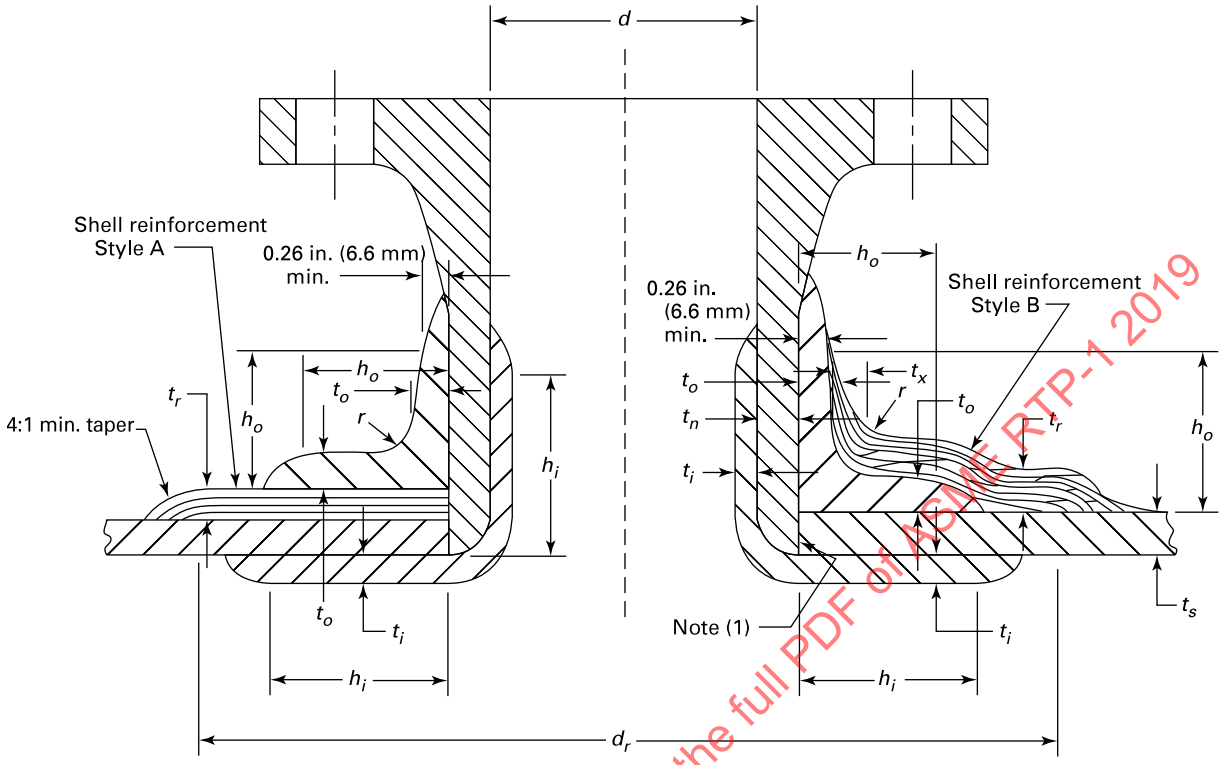

Legend:

d = nozzle diameter
d_r = cutout reinforcement diameter, measured on the vessel surface (greater of $2d$ or $d + 6$; see para. 3A-720)
h_i = inside shear bond length (see Table 4-3)
h_o = outside shear bond length (see Table 4-3)
h_s = total shear bond length (see Table 4-3)
= $h_i + h_o$
r = fillet radius [$^3/_8$ in. (10 mm) min.]
t_i = inside installation laminate thickness
= $t_w - t_o$ [minimum t_i = 0.14 in. (3.6 mm) {3*M*, *V*)]
t_n = minimum nozzle stub thickness {see Figure 4-10(a) [Figure 4-10(b)] and Table 4-2}
t_o = outside installation laminate thickness
= $t_w - t_i$ [minimum t_o = 0.26 in. (6.6 mm) (6*M*)]
t_r = cutout reinforcement laminate thickness (see para. 3A-730)
t_s = shell thickness
t_w = total installation laminate thickness [minimum t_w = 0.40 in. (10.2 mm)]
= greater of t_r or $2t_n$ for Style A
= lesser of t_r or $2t_n$ for Style B
t_x = reinforcement base thickness
= $t_r/2$ (Style B reinforcement)

GENERAL NOTE: The installation laminate and the reinforcement may be applied as a single unit.

NOTE: (1) Nozzle wall may also butt up against the shell or head exterior surface.

ASMENORMDOC.COM : Click to view the full PDF of ASME RTP-1 2019

Figure 4-5 Penetrating Nozzle Installation

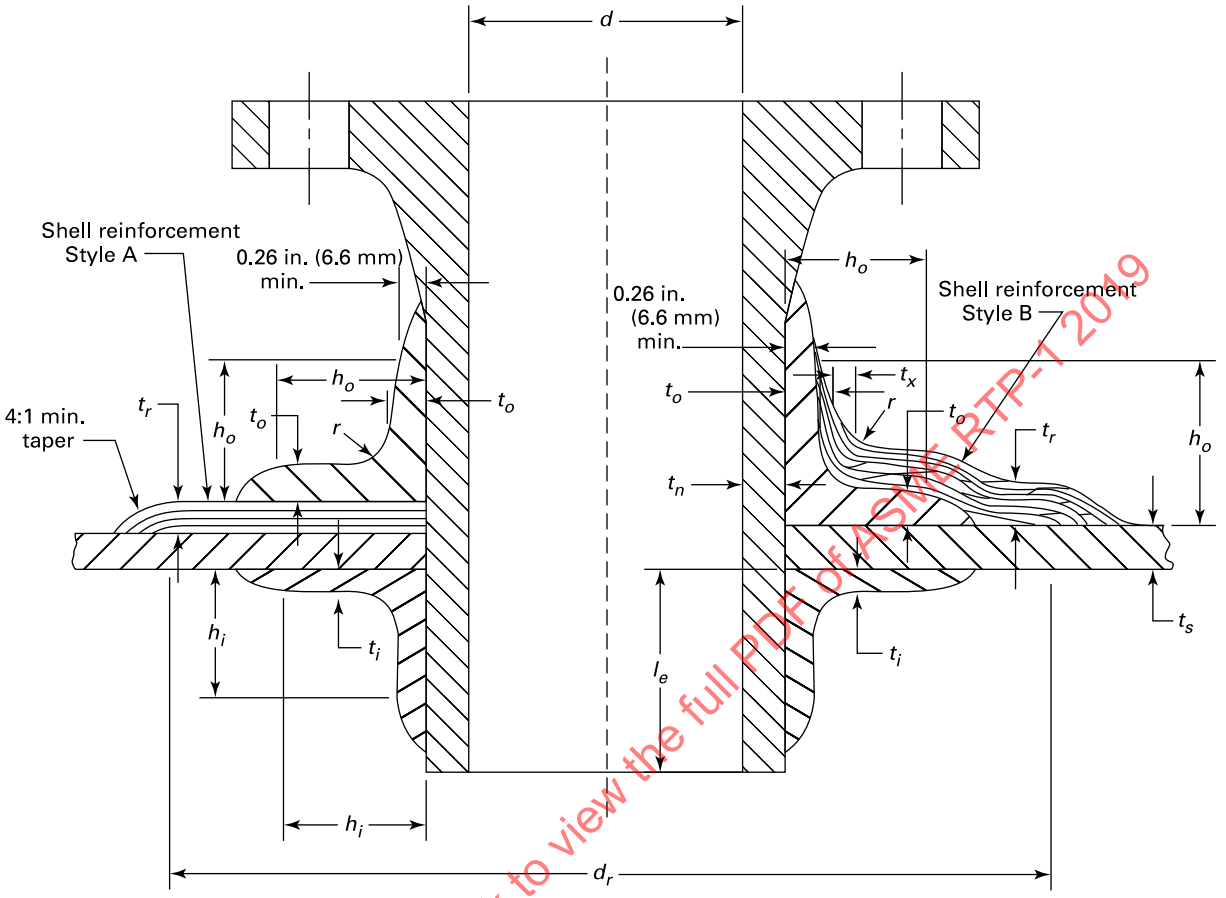

Legend:

d = nozzle diameter
d_r = cutout reinforcement diameter, measured on the vessel surface (greater of $2d$ or $d + 6$; see para. 3A-720)
h_i = inside shear bond length (see Table 4-3)
h_o = outside shear bond length (see Table 4-3)
h_s = total shear bond length (see Table 4-3)
= $h_i + h_o$
I_e = penetration length [2 in. (50 mm) min.]
r = fillet radius [3/8 in. (10 mm) min.]
t_i = inside installation laminate thickness
= $t_w - t_o$ [minimum t_i = 0.14 in. (3.6 mm) (3*M*, *V*)]
t_n = minimum nozzle stub thickness {see Figure 4-10(a) [Figure 4-10(b)] and Table 4-2}
t_o = outside installation laminate thickness
= $t_w - t_i$ [minimum t_o = 0.26 in. (6.6 mm) (6*M*)]
t_r = cutout reinforcement laminate thickness (see para. 3A-730)
t_s = shell thickness
t_w = total installation laminate thickness [minimum t_w = 0.40 in. (10.2 mm)]
= greater of t_r or $2t_n$ for Style A
= lesser of t_r or $2t_n$ for Style B
t_x = reinforcement base thickness
= $t_r/2$ (Style B reinforcement)

GENERAL NOTE: The installation laminate and the reinforcement may be applied as a single unit.

ASMENORMDOC.COM : Click to view the full PDF of ASME RTP-1 2019

(19)

Figure 4-6 Bottom Drain Detail

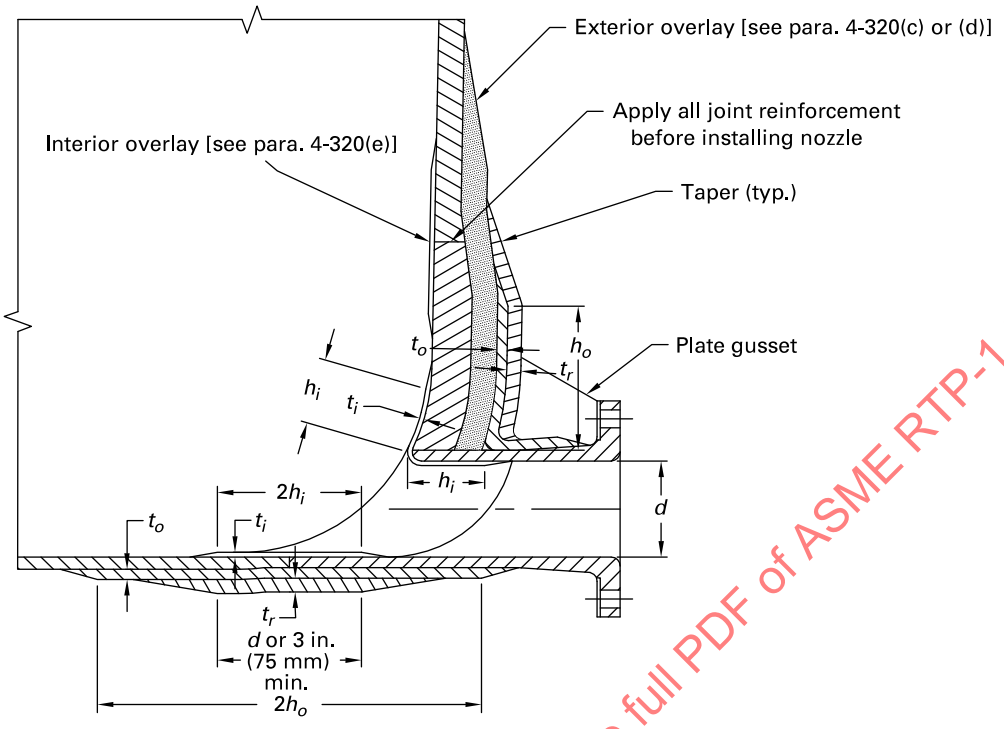

(a) Flush Drain

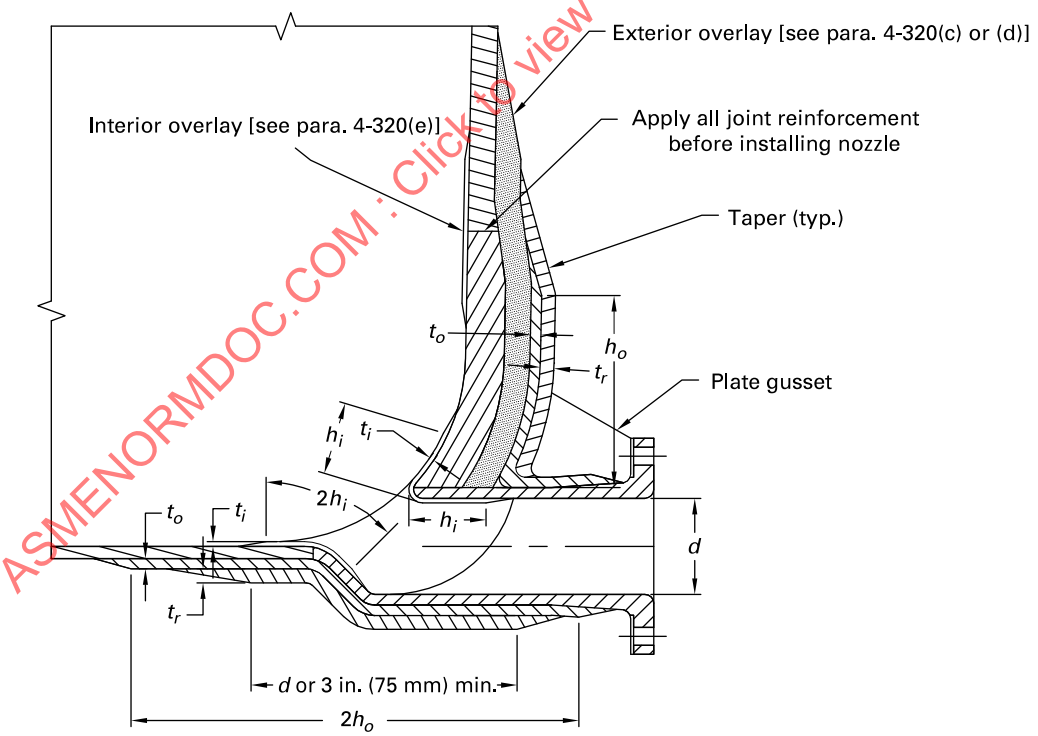

(b) Full Drain

GENERAL NOTE: For flush drain and full drain, notch foundation to accommodate offset. Notch is to be minimized, as determined by a Qualified Designer. Drawings are to show dimensions of notch. It is optional to fill notch with grout. Grouting requirements are to be determined by a Qualified Designer. (See Figure 4-4 for definitions of nomenclature, such as h_o, h_i, t_o, etc.)

ASMENORMDOC.COM : Click to view the full PDF of ASME RTP-1 2019

Figure 4-7 Stiffener Details for Half-Round, Trapezoidal, and Filament Wound Band Configurations

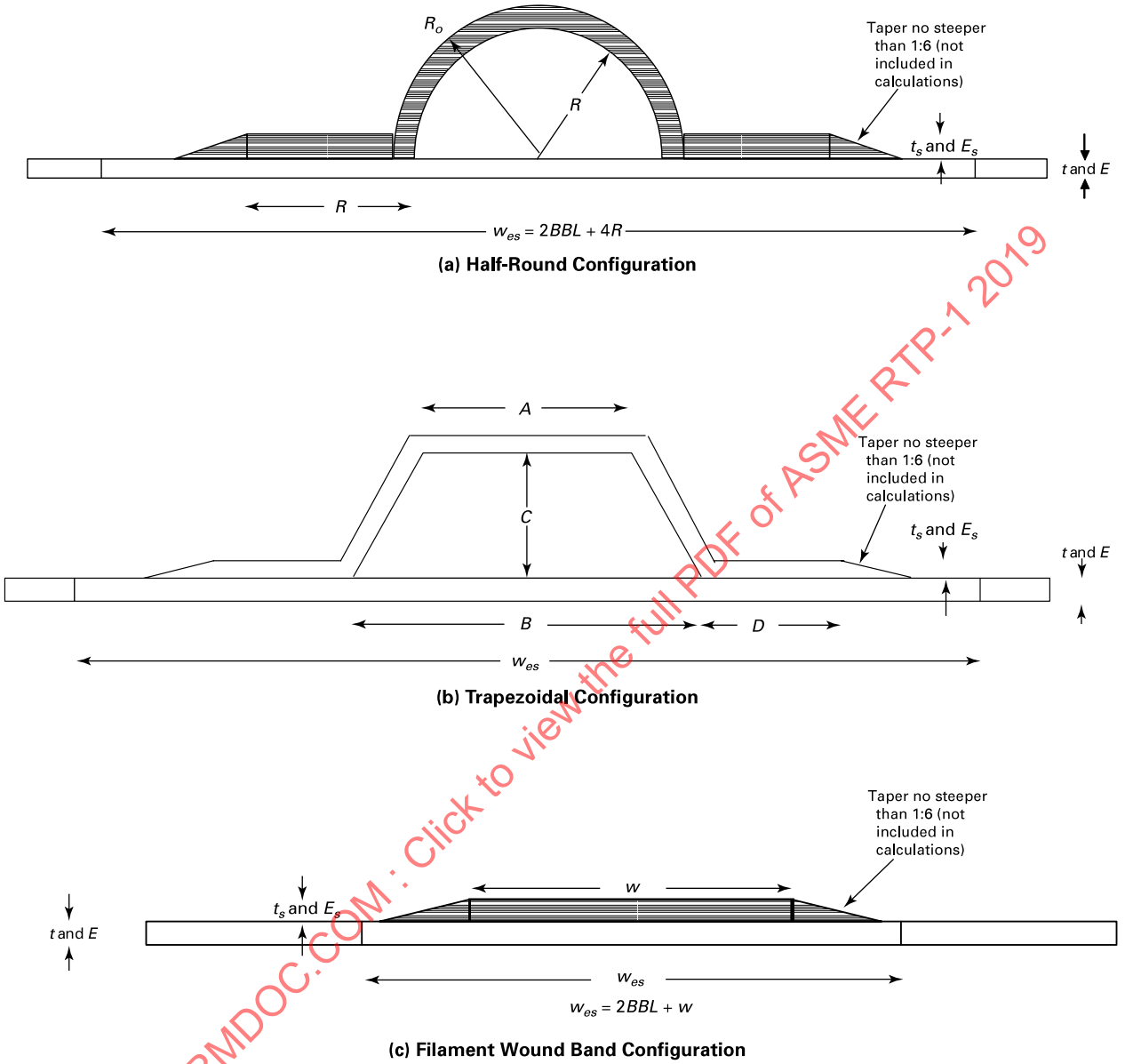

ASMENORMDOC.COM : Click to view the full PDF of ASME RTP-1 2019

GENERAL NOTES:

(a) See Nonmandatory Appendix NM-17 for the calculation of the *BBL* and the stiffener effective moment of inertia for the above configurations.

(b) t_s = stiffener thickness, in. (mm), and is not limited to alternating layers of mat and woven roving with a final mat layer.

(19)

Figure 4-8 Support Skirt Attachment Detail

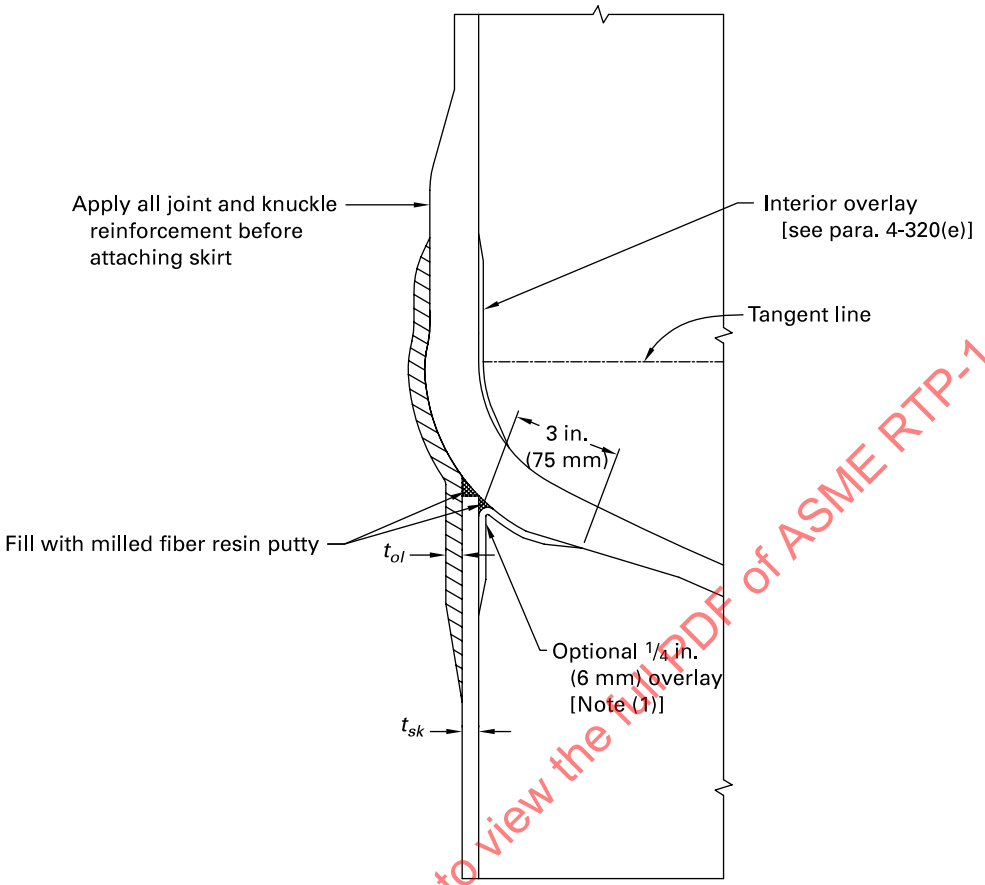

Legend:

t_{ol} = thickness of skirt-to-shell overlay bond

t_{sk} = thickness of skirt

GENERAL NOTE:

(a) t_{ol}, length of bond, and type of laminate to be determined by a Qualified Designer [see para. 4-320(g)].

(b) Skirt inside diameter shall be the same as vessel inside diameter.

NOTE: (1) If overlay is used, it may be applied after an acoustic emission test.

ASMENORMDOC.COM : Click to view the full PDF of ASME RTP-1 2019

Figure 4-9 Fabrication Tolerances

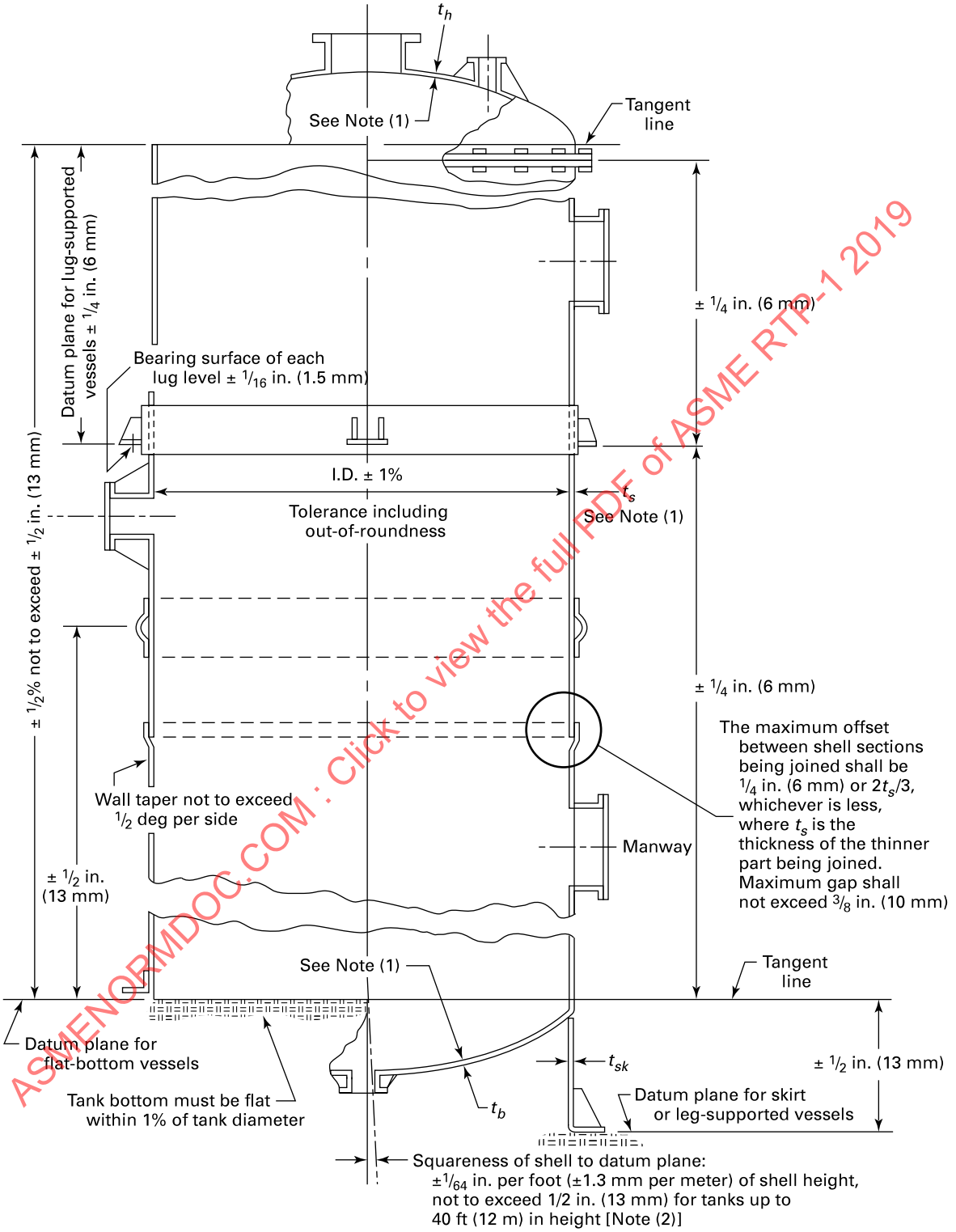

ASMENORMDOC.COM : Click to view the full PDF of ASME RTP-1 2019

NOTES:
(1) See para. 6-920 for thickness tolerances.
(2) Tolerances for tanks above 40 ft (12 m) in height should be stated in the UBRS.

(19) **Figure 4-10(a) Nozzle Flange Dimensions for Class 150 Bolting (U.S. Customary Units)**

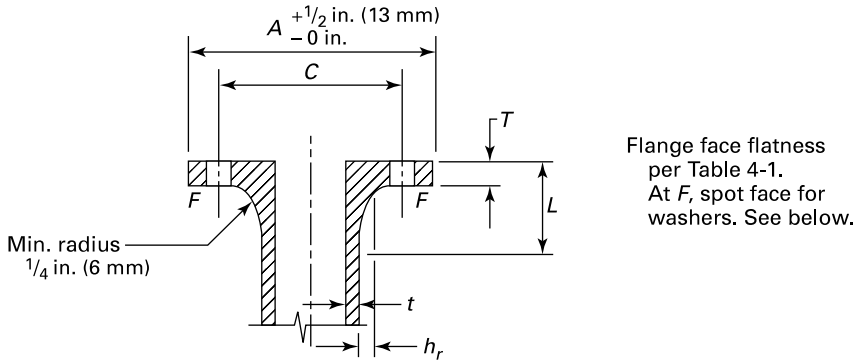

Nominal Pipe Size (NPS)	*A*, in. [Note (1)]	*C*, in. [Notes (2)–(4)]	Min. *T*, Type I Laminates, in.	Min. *T*, Type II Laminates, in.	Min. Hub Reinforcement, h_r, in.	Min. *t*, in.	Min. *L*, in.	No. of Bolts	Bolt Hole Diameter, in.	Bolt Diameter, in.	ASME B18.21.1 Type A Narrow Washer Size (O.D.), in.	Bolt Torque, ft-lb [Note (5)]
2	6.00	4.75	0.63	0.56	0.25	0.25	2.63	4	3/4	5/8	1 5/16	25
3	7.50	6.00	0.63	0.56	0.28	0.25	2.88	4	3/4	5/8	1 5/16	25
4	9.00	7.50	0.81	0.69	0.31	0.25	3.25	8	3/4	5/8	1 5/16	25
6	11.00	9.50	0.94	0.69	0.31	0.25	3.81	8	7/8	3/4	1 1/2	25
8	13.50	11.75	1.13	0.81	0.38	0.25	4.38	8	7/8	3/4	1 1/2	25
10	16.00	14.25	1.25	0.94	0.50	0.25	4.38	12	1	7/8	1 3/4	25
12	19.00	17.00	1.44	1.06	0.63	0.25	4.94	12	1	7/8	1 3/4	25
14	21.00	18.75	1.44	1.06	0.69	0.31	5.00	12	1 1/8	1	2	30
16	23.50	21.25	1.56	1.19	0.72	0.31	5.06	16	1 1/8	1	2	30
18	25.00	22.75	1.63	1.25	0.75	0.38	5.50	16	1 1/4	1 1/8	2 1/4	35
20	27.50	25.00	1.81	1.31	0.75	0.38	5.75	20	1 1/4	1 1/8	2 1/4	35
24	32.00	29.50	2.13	1.50	0.81	0.44	5.75	20	1 3/8	1 1/4	2 3/8	40

GENERAL NOTES:

(a) Gaskets shall be 1/8-in. thick full-face elastomeric material having a hardness of Shore A60 ±5 and having a maximum seating stress, y, of 50 psi. If a harder gasket material or one requiring a higher seating stress is to be used, the flange(s) shall be custom designed for the required gasket seating stress using Nonmandatory Appendix NM-2 or Nonmandatory Appendix NM-12 and shall meet all the requirements of para. 4-410.

(b) Flange thicknesses are based on 1,800 psi design stress for Type I laminates and a 3,000 psi design stress for Type II laminates. A design factor of 5:1 was used against ultimate tensile stress in both types of laminate construction.

(c) The nozzle neck thicknesses given are based on a Type II or equivalent strength filament wound Type X laminate with a design factor of 10:1 against ultimate tensile strength and are the minimum thicknesses that may be used in all types of laminate construction. If Type I hand lay-up laminates are utilized, the nozzle neck thicknesses shall be increased for nominal pipe sizes 10 in. and up.

(d) The rating of all nozzle necks and flanges for all sizes given in this Table is 50 psi.

(e) Dimensions generally comparable to Class 150 welding-neck flanges.

NOTES:

(1) O.D. tolerance of +½ in., −0 in. is provided to ensure a minimum edge distance with the bolt holes allowing for mold and fabrication discrepancies and also to prevent interference with adjacent valve or piping equipment.

(2) ±0.06 in. (see ASME B16.5).

(3) ±0.03 in. center to center of adjacent bolt holes (see ASME B16.5).

(4) Eccentricity between bolt holes and center of nozzle: for size 2 in., ±0.03 in.; for size 3 in. and larger, ±0.06 in.

(5) The specified bolt torque is based on well-lubricated threads and nuts or bolt head to washer bearing surfaces resulting in a maximum nut or friction factor of 0.15 and a maximum bolt stress of 18,800 psi. Torque tolerance shall be ±5 ft-lb for flanges sizes 2 in. to 12 in. and ±10 ft-lb for flanges sizes 14 in. and up.

ASMENORMDOC.COM : Click to view the full PDF of ASME RTP-1 2019

(19) **Figure 4-10(b) Nozzle Flange Dimensions for Class 150 Bolting (SI Units)**

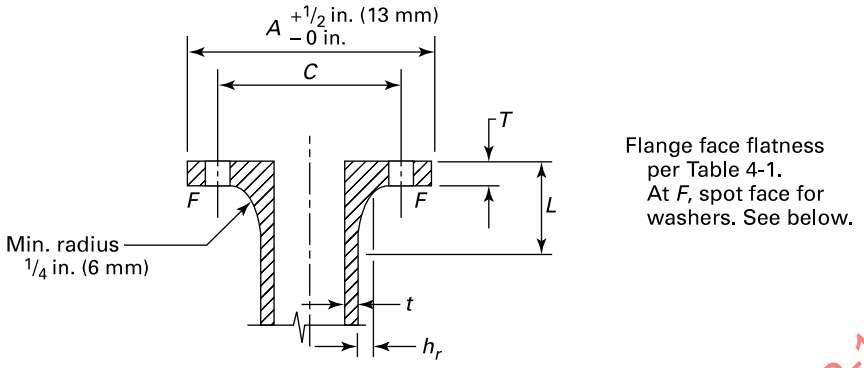

Nominal Pipe Size (NPS)	*A*, mm [Note (1)]	*C*, mm [Notes (2)–(4)]	Min. *T*, Type I Laminates, mm	Min. *T*, Type II Laminates, mm	Min. Hub Reinforcement, h_r, mm	Min. *t*, mm	Min. *L*, mm	No. of Bolts	Bolt Hole Diameter, in. [Note (5)]	Bolt Diameter, in. [Note (5)]	ASME B18.21.1 Type A Narrow Washer Size (O.D.), in. [Note(5)]	Bolt Torque, N-m [Note (6)]
2	150	120.7	16	14	6	6	67	4	3/4	5/8	1 5/16	34
3	190	152.4	16	14	7	6	73	4	3/4	5/8	1 5/16	34
4	230	190.5	21	17	8	6	83	8	3/4	5/8	1 5/16	34
6	280	241.3	24	17	8	6	97	8	7/8	3/4	1 1/2	34
8	345	298.5	29	21	10	6	111	8	7/8	3/4	1 1/2	34
10	405	362.0	32	24	13	6	111	12	1	7/8	1 3/4	34
12	485	431.8	37	27	16	6	125	12	1	7/8	1 3/4	34
14	535	476.3	37	27	17	8	127	12	1 1/8	1	2	41
16	595	539.8	40	30	18	8	129	16	1 1/8	1	2	41
18	635	577.9	41	32	19	10	140	16	1 1/4	1 1/8	2 1/4	47
20	700	635.0	46	33	19	10	146	20	1 1/4	1 1/8	2 1/4	47
24	815	749.3	54	38	21	11	146	20	1 3/8	1 1/4	2 3/8	54

GENERAL NOTES:

(a) Gaskets shall be 3 mm thick full-face elastomeric material having a hardness of Shore A60 ±5 and having a maximum seating stress, γ, of 345 kPa. If a harder gasket material or one requiring a higher seating stress is to be used, the flange(s) shall be custom designed for the required gasket seating stress using Nonmandatory Appendix NM-2 or Nonmandatory Appendix NM-12 and shall meet all the requirements of para. 4-410.

(b) Flange thicknesses are based on 12.4 MPa design stress for Type I laminates and a 20.7 MPa design stress for Type II laminates. A design factor of 5:1 was used against ultimate tensile stress in both types of laminate construction.

(c) The nozzle neck thicknesses given are based on a Type II or equivalent strength filament wound Type X laminate with a design factor of 10:1 against ultimate tensile strength and are the minimum thicknesses that may be used in all types of laminate construction. If Type I hand lay-up laminates are utilized, the nozzle neck thicknesses shall be increased for nominal pipe sizes 10 in. and up.

(d) The rating of all nozzle necks and flanges for all sizes given in this Table is 345 kPa.

(e) Dimensions generally comparable to Class 150 welding-neck flanges.

NOTES:

(1) O.D. tolerance of +13 mm, −0 mm. is provided to ensure a minimum edge distance with the bolt holes allowing for mold and fabrication discrepancies and also to prevent interference with adjacent valve or piping equipment.

(2) ±1.5 mm (see ASME B16.5).

(3) ±0.8 mm center to center of adjacent bolt holes (see ASME B16.5).

(4) Eccentricity between bolt holes and center of nozzle: for size 50 mm, 0.8 mm; for size 75 mm and larger, 1.5 mm.

(5) Bolt hole diameter, bolt diameter, and washer size shall remain in U.S. Customary units for consistency with ASME B16.5.

ASMENORMDOC.COM : Click to view the full PDF of ASME RTP-1 2019

Figure 4-10(b) Nozzle Flange Dimensions for Class 150 Bolting (SI Units) (Cont'd)

NOTES (Cont'd)

(6) The specified bolt torque is based on well-lubricated threads and nuts or bolt head to washer bearing surfaces resulting in a maximum nut or friction factor of 0.15 and a maximum bolt stress of 129.6 MPa. Torque tolerance shall be 6.8 N·m for flanges sizes 2 in. to 12 in. and 13.6 N·m for flanges sizes 14 in. and up.

Figure 4-11 Flanged Nozzle Lay-Up Method

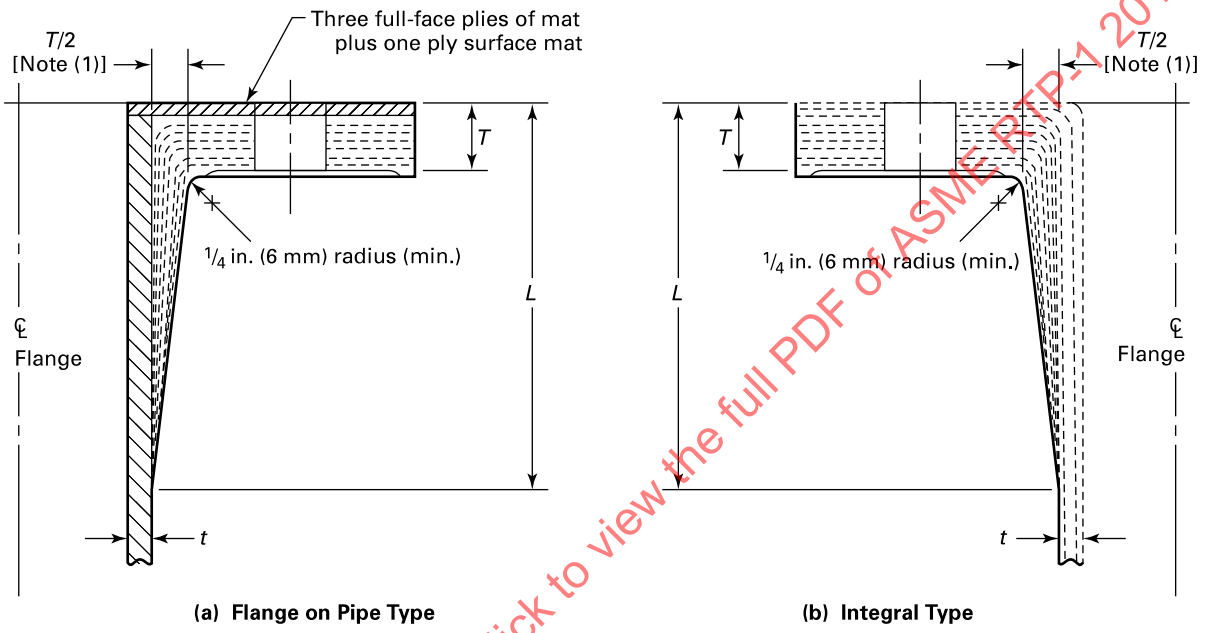

NOTE: (1) $T/2$ equals hub reinforcement.

ASMENORMDOC.COM : Click to view the full PDF of ASME RTP-1 2019

Figure 4-12 Nozzle Installation and Cutout Reinforcement Location Alternate

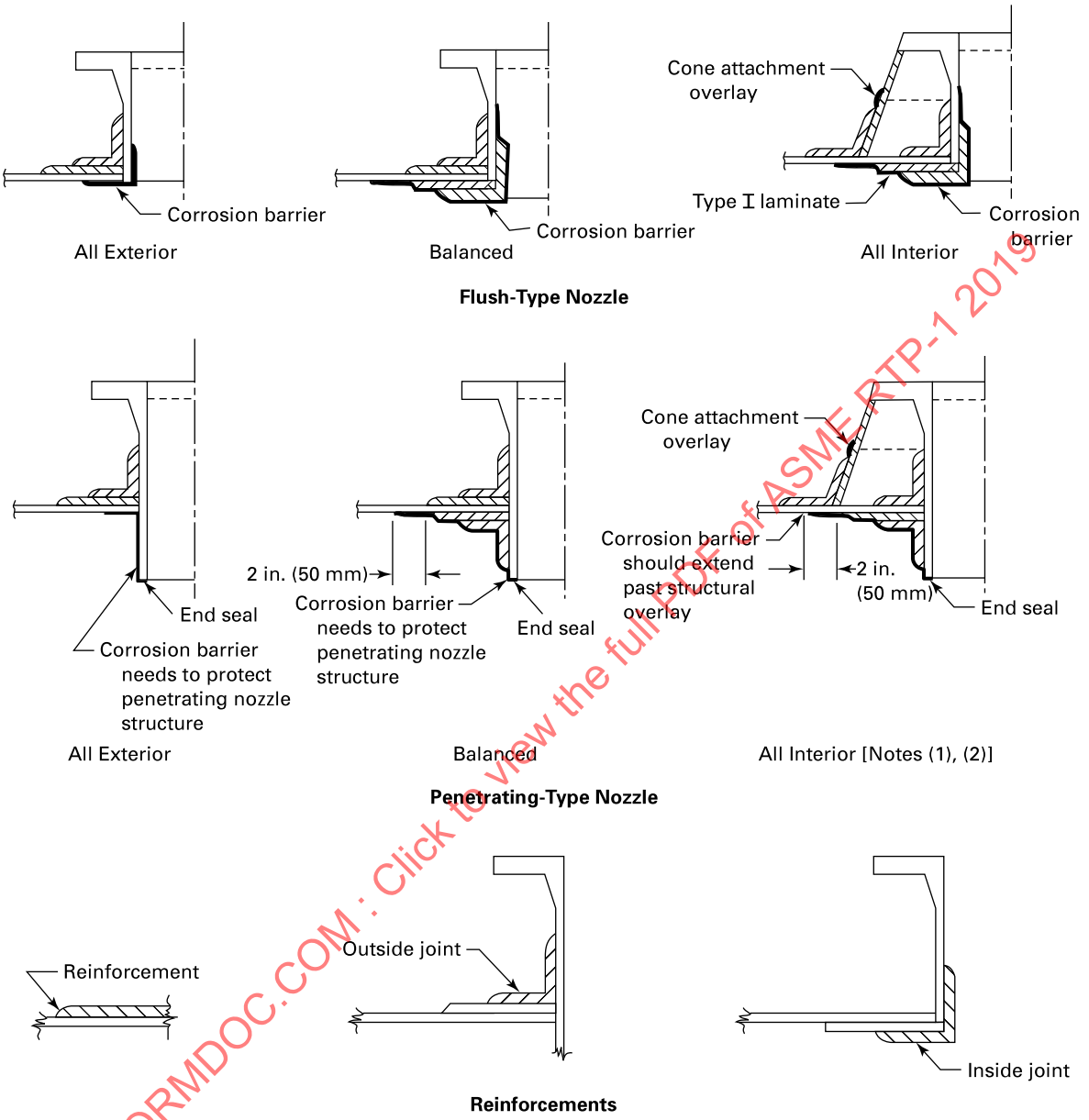

NOTES:
(1) The reinforcement(s) and joint(s) may be done in one operation.
(2) In highly corrosive environments, interior structural overlays are not recommended.

ASMENORMDOC.COM : Click to view the full PDF of ASME RTP-1 2019

Figure 4-13 Nozzle Gussets

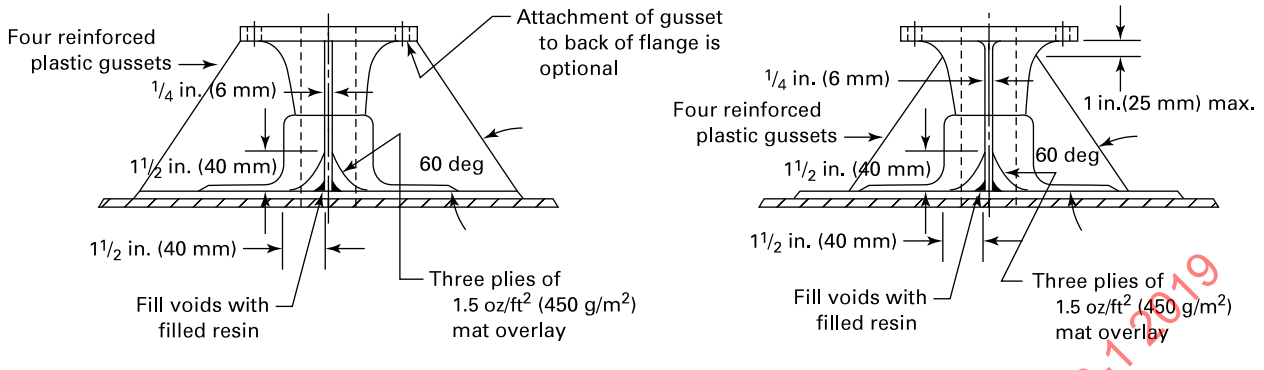

(a) Plate-Type Gussets [Note (1)]

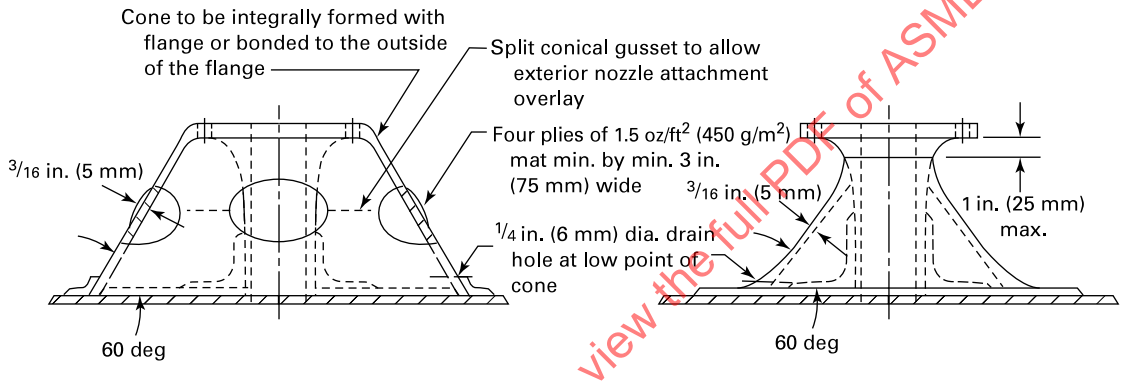

(b) Typical Cone-Type Gussets [Note (2)]

NOTES:

(1) Gussets are to be evenly spaced around nozzle. Gussets are to be added after complete assembly of nozzle on shell. Gussets are not normally required on nozzles over NPS 4 (DN 100).

(2) Conical gusset attachment to the shell or head shall be made after the installation of the external structural nozzle attachment overlay.

ASMENORMDOC.COM : Click to view the full PDF of ASME RTP-1 2019

Figure 4-14 Flange Tolerances

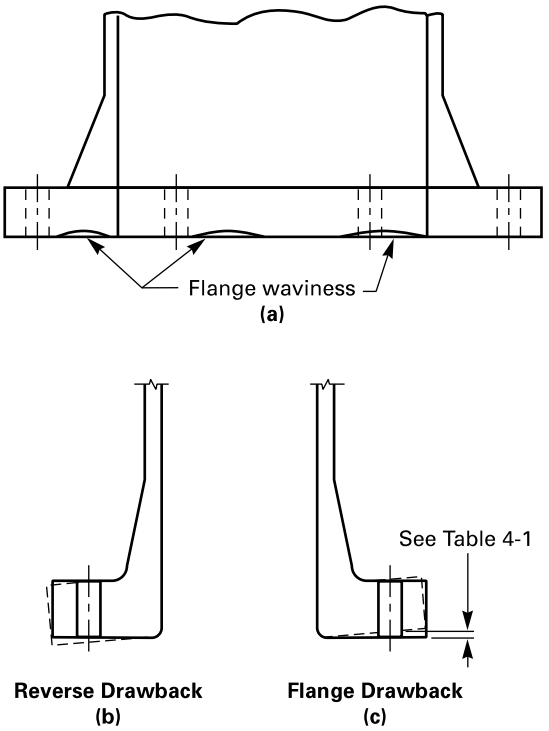

Figure 4-15 Flat Cored Bottom Knuckle Detail

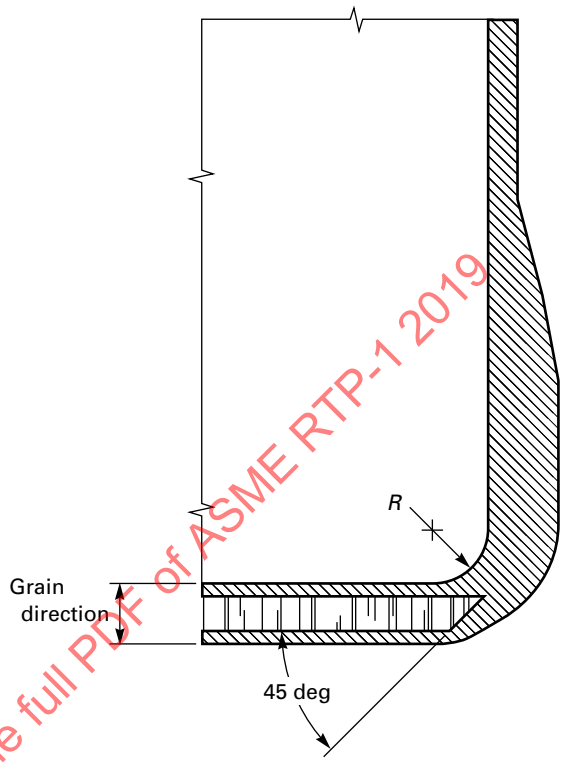

GENERAL NOTE: Refer to Figure 4-2 for flat-bottom tank corner detail.

Table 4-1 Flange Flatness Tolerance

Inside Diameter, in. (mm)	Tolerance, in. (mm)
2 to 84 (50 to 2 100)	+1/32 (0.8)
over 84 to 108 (2 100 to 2 700)	+1/16 (1.5)
over 108 to 144 (2 700 to 3 600)	+3/32 (2.4)

ASMENORMDOC.COM : Click to view the full PDF of ASME RTP-1 2019

(19)

Table 4-2 Typical Dimensions of Manways

Nominal Size, in.	Minimum Diameter of Flange and Cover, in. (mm)	Minimum Thickness of Flange and Cover, in. (mm)	Min. Manway Wall Thickness, in. (mm)	Diameter of Bolt Circle, in. [Notes(1)-(3)]	Number of Bolts	Bolt Hole Diameter, in.
Pressurized manway — up to 15 psig (103 kPag)						
20	27.50 (700)	1 (25)	0.38 (10)	25.00 (635.0)	20	¾
22	29.50 (750)	1 (25)	0.38 (10)	27.25 (692.2)	20	¾
24	32.00 (815)	1.25 (32)	0.38 (10)	29.50 (749.3)	20	¾
Manway — atmospheric pressure, up to 0.5 psig (3.4 kPag)						
20	27.50 (700)	0.38 (10)	0.25 (6)	25.00 635.0)	20	½
22	29.50 (750)	0.38 (10)	0.25 (6)	27.25 (692.2)	20	½
24	32.00 (815)	0.38 (10)	0.25 (6)	29.50 (749.3)	20	½

GENERAL NOTES:
(a) Bolt size equals bolt hole diameter minus ⅛ in.
(b) Gaskets shall be ⅛ in. (3 mm) thick full-face elastomeric material having a hardness of Shore A60 ±5.

NOTES:
(1) ±0.06 in. (1.5 mm) (ASME B16.5).
(2) ±0.03 in. (0.8 mm) center to center of adjacent bolt holes (ASME B16.5).
(3) ±0.06 in. (1.5 mm) eccentricity between bolt circle and center of nozzle.

Table 4-3 Shear Bond Length

Minimum Nominal Overlay Thickness, in. (mm)	Minimum Shear Length, h_s, in. (mm) [Note (1)]
¼ (6)	3 (75)
5/16 (8)	3 (75)
⅜ (10)	3 (75)
7/16 (11)	3½ (90)
½ (13)	4 (100)
9/16 (14)	4½ (115)
⅝ (16)	5 (125)
11/16 (17)	5½ (140)
¾ (19)	6 (150)
⅞ (22)	7 (175)
1 (25)	8 (200)

GENERAL NOTE: When internal overlay serves only as a corrosion barrier, the total shear length shall be placed on the exterior overlay.

NOTE: (1) h_s is total shear length ($h_o + h_i$). See Figures 4-4 and 4-5.

ASMENORMDOC.COM Click to view the full PDF of ASME RTP-1 2019

Part 5
Overpressure Protection

5-100 BASIS FOR DESIGN

5-110 Atmospheric Tanks

(a) Atmospheric tanks shall be directly vented to atmosphere through an open top or through a minimum height, permanently attached vent.

(b) Vents for atmospheric tanks shall have a cross-sectional area equal to or exceeding the combined areas of inlets or outlets, whichever is greater.

(c) Atmospheric tanks may not be equipped with a flanged vent or a removable vent.

(d) All atmospheric tanks shall be equipped with an overflow at or below the top of the shell and the overflow must have a cross-sectional area equal to or exceeding the combined areas of inlets.

5-120 Excessive Pressure

In view of the relatively low mechanical properties of RTP compared with metals, careful consideration must be given to excessive internal or external pressure.

5-130 Operating Characteristics

Operating conditions shall reflect both normal and abnormal operations relating to internal or external pressure, venting, vessel overflow location, and process upsets.

5-200 PROTECTION AGAINST OVERPRESSURE

All vessels within the scope of this Standard shall be provided with protection against internal and/or external pressure exceeding maximum allowable pressures. This shall be the responsibility of the User.

The size and location of all nozzles used for overpressure protection set forth in para. 5-300 shall be shown in the equipment sketch and nozzle schedule attached to the UBRS.

5-300 TYPE OF OVERPRESSURE PROTECTION

Protection against overpressure shall be accomplished by one or a combination of the following devices:

(a) direct spring-loaded safety or safety relief valves
(b) rupture disks
(c) deadweight loaded pallet-type vent valves
(d) free vents

5-400 LOCATION OF OVERPRESSURE PROTECTION DEVICES

Devices listed in paras. 5-300(a) through 5-300(d) shall be located in the top of the vessel above the maximum liquid level.

Overflows for vertical vessels shall be on or below the top head tangent line. Overflows for horizontal vessels shall be located in the head or shell below the top of the shell.

The User shall not use free vents as liquid overflows.

5-500 INSTALLATION PRACTICES

Unsecured (not locked or sealed open) block valves shall not be installed between the vessel and any relieving device.

5-600 OVERPRESSURE DEVICE SET PRESSURE

Relief devices shall be set no higher than the maximum allowable working pressure.

5-700 RELIEF DEVICE SIZING

5-710 Sizing of Spring or Deadweight Loaded Valves and Rupture Disks

Devices listed in paras. 5-300(a), (b), and (c) shall be sized in accordance with the device manufacturer's catalog so that at its full flow capacity the relief pressure shall not exceed 110% of the vessel MAWP.

5-720 Sizing of Vents and Overflows

Vents and overflows that discharge freely into the atmosphere shall be sized sufficiently to handle the flow displacement of all combined inlet and outlet nozzles without creating any pressure above the vessel's MAWP or any external pressure higher than the vessel's MAEWP.

5-800 DISCHARGE LINES FROM PRESSURE RELIEF DEVICES

Discharge lines from pressure relief devices shall be designed to facilitate drainage or shall be fitted with an open drain to prevent lodging in the discharge side of the safety device. Discharge lines shall lead to a safe place of discharge. The size of the discharge lines shall

ASMENORMDOC.COM : Click to view the full PDF of ASME RTP-1 2019

be such that any pressure that may exist or develop will not reduce the relieving capacity of the relieving device below that required to protect the vessel properly.

5-900 RESPONSIBILITY FOR DESIGN AND SELECTION

The design and/or selection of pressure relief devices, the sizing of mounting nozzle, and the size, length, and routing of discharge piping shall be the responsibility of the User and not that of the Fabricator or the Inspector.

ASMENORMDOC.COM : Click to view the full PDF of ASME RTP-1 2019

Part 6
Inspection and Tests

6-100 SCOPE

This Part covers inspection and testing of RTP corrosion resistant vessels. It is intended to ensure that a vessel has been designed and fabricated in accordance with the requirements of the latest revision of the design, the approved drawings, and this Standard.

This Part does not cover specifications, instructions, and inspections referred to in the User's Basic Requirements Specification (UBRS), which may be more restrictive than the requirements of this Standard and may require additional verification by the User's inspector. Nonmandatory Appendix NM-7 covers User's inspection.

6-200 INSPECTOR

See para. 1-400.

6-300 INSPECTION AND RESPONSIBILITY

(a) The Fabricator of a vessel has the responsibility to comply with all the requirements of this Standard, the design, and the UBRS. The Fabricator is additionally responsible for assuring that any RTP subassemblies or components fabricated by a Subcontractor that will become a portion of the vessel and are part of the scope of RTP-1 (see paras. 1-110 and 1-120) shall be fabricated by an ASME RTP-1 certified shop and are to be in full compliance with all the requirements of RTP-1. Partial Data Reports shall accompany any such subassembly or component and shall be signed by the Subcontractor's Certified Individual.

(b) Any subcontracted or outsourced subassembly or component to be furnished with a vessel by a Fabricator that will become a portion of the vessel, or a load-bearing accessory that will be attached to the vessel (i.e., a support), shall also be inspected by the Fabricator's inspector. Procedures and general requirements for acceptance or rejection shall be part of the Fabricator's Quality Control Program.

(c) The Fabricator shall have a written Quality Control Manual, to include defined procedures and forms so as to control the process of fabrication. The Fabricator's Quality Control Program shall be supervised by the Fabricator and shall be in effective operation throughout the process of fabrication. See Mandatory Appendix M-4.

(d) A copy of the Fabricator's Quality Control Manual shall be made available to the Inspector on request. The Fabricator's Quality Control Manual may contain proprietary information and procedures. No copies of the Fabricator's Quality Control Manual shall be removed from the Fabricator's premises without the Fabricator's permission. This security protection, however, is not to apply to quality control forms and checklists which may be a portion of the Quality Control Manual but are necessary to be used during fabrication to check and control the fabrication process.

(e) The Certified Individual's responsibility is to verify that the Fabricator's Quality Control Program is in effective operation via an annual audit as required in para. 1-410(a) and to additionally make such specific inspections and tests as are required by this Standard. The Inspector shall provide a complete report including all data as required in paras. 6-910 through 6-960.

(f) Prior to the start of fabrication, the Fabricator shall make available to the Inspector such records pertaining to the vessel as required to permit the Inspector to perform the inspections. These shall include drawings, material test results, the UBRS, the Fabricator's Design Report, and any other reports or records as required. The Fabricator shall provide for Inspector's hold points and verifications of satisfactory completion. Fabrication shall not proceed beyond a hold point until specified inspections have been made.

(g) The Fabricator shall make his/her quality control personnel available to the Inspector.

(h) The Fabricator shall make available to the Inspector any and all necessary tools and test equipment so the Inspector may conduct all inspections required by this Standard.

(i) Final acceptance of the vessel by the Certified Individual shall be obtained by the Fabricator prior to the application of the official ASME Certification Mark with RTP Designator. The Certified Individual shall sign the Fabricator's Certificate of Compliance on the Fabricator's Data Report only when the Certified Individual is satisfied that all requirements of this Standard have been met [see paras. 6-900(d) and 6-900(e)].

ASMENORMDOC.COM : Click to view the full PDF of ASME RTP-1 2019

6-400 CONDITIONS FOR INSPECTION

(a) The Fabricator shall ensure that the vessel is clean and free of foreign materials to permit the Inspector to inspect all accessible surfaces.

(b) The Fabricator shall position and ensure that the vessel is in suitable condition to permit reasonable and safe access for inspection.

(c) The Fabricator shall provide reasonable and safe means, such as ladders and/or platforms, to permit the Inspector to safely inspect accessible inner and outer surfaces of the vessel.

(d) The User's inspector should be familiar with the possible hazards and safety requirements associated with the use of all RTP materials and fabrication methods. The User's inspector should observe safety requirements set up by the Fabricator and should be alert to fabricating shop hazards that might be associated with hydrostatic testing of equipment.

(19) **6-500 EQUIPMENT DESIGN**

The Inspector shall examine the Fabricator's design records and reports and verify that the vessel conforms to the latest revision of approved drawings and the UBRS, and that the Fabricator's Design Report has been certified by a Qualified Designer.

6-600 MATERIALS

The Inspector shall verify that materials used in fabrication of a vessel comply with the requirements of this Standard and the UBRS.

6-700 FABRICATION

The Inspector shall establish hold points and make periodic inspections and measurements of the vessel as are required by this Standard to verify that fabrication is in accordance with the requirements of this Standard and the UBRS.

At the completion of each hold point inspection, the Inspector shall report results on forms provided in the Fabricator's Quality Control Program, and highlight any discrepancies requiring corrective action.

6-800 FABRICATOR'S QUALITY ASSURANCE PROGRAM

The Inspector shall make such checks as are necessary to verify that the Fabricator's Quality Assurance Program is in effective operation. In addition, the Certified Individual shall perform an annual audit of the Fabricator's Quality Assurance Program.

Any discrepancies shall be promptly brought to the Fabricator's attention for discussion and resolution.

6-900 FINAL INSPECTION

(a) At the time of final inspection, the Fabricator shall provide to the Inspector the final revision of all of the following documents:

(1) design drawings

(2) UBRS

(3) completed and signed copies of all forms from the Fabricator's Quality Control Manual that were used during fabrication to check and verify compliance with this Standard and the design

(4) any copies of Fabricator's Partial Data Reports, with signed Certificates of Compliance, applicable to the finished fabrication (see Form 1-3)

(5) copies of all inspection reports made by any inspector/Inspector during the course of fabrication

(6) completed original document of the Fabricator's Data Report, applicable to the vessel to be inspected, with the Certificate of Compliance signed and dated by the authorized representative of the Fabricator (see Form 1-2)

(7) copy of the final revision of the Fabricator's Design Report

(8) the nameplate that is to be applied to the vessel, so that the Inspector may verify that the nameplate meets the requirements of the UBRS and para. 1-540

(b) Design drawings shall show design thicknesses and the laminate reinforcing sequence for every section or member. If, during the course of fabrication, it was necessary to add repeatable units to the laminate [see para. 6-920(f)(4)], this change shall be noted and highlighted on the drawings provided to the Inspector.

(c) The Fabricator shall also make available to the Inspector all nozzle and manway cutouts, each identified clearly as to its point of origin on the vessel.

(d) Upon completion of final inspection, the Inspector shall prepare a brief report summarizing his/her inspection activities and findings, and submit the report to the Fabricator as an attachment to the Certificate of Compliance.

(e) When the Inspector has completed the inspections and found the results to be within required tolerances, the Inspector shall present his/her inspection report along with any findings to the Certified Individual. The Certified Individual shall sign and date the Certificate of Compliance prior to returning it to the Fabricator with the inspection report.

(f) Paragraphs 6-910 through 6-960 describe the minimum basic tests that shall be made, witnessed, or verified by the Inspector prior to or at the time of final inspection.

6-910 Resin Cure

(a) During the course of fabrication, the Fabricator shall make all such checks necessary to ensure that resin additives, promotion, catalyzation, dilution, and

ASMENORMDOC.COM : Click to view the full PDF of ASME RTP-1 2019

curing are controlled and are within the requirements of this Standard. The Fabricator's Quality Control Program shall include procedures and forms, to be used throughout fabrication, to control the ongoing process of resin handling and curing so as to ensure that cure is within required tolerance prior to the final inspection.

(b) The Inspector shall verify that the resin has properly cured by testing the internal (process exposed) surfaces of major equipment components and joints, such as heads, shell sections, head/shell and shell/shell juncture overlays, nozzle and manway necks NPS 18 (DN 450) diameter and larger, and manway covers and blind flanges.

Additionally, the following external surfaces shall be tested to verify proper resin cure: head/shell and shell/shell juncture overlays, and nozzle and manway juncture overlays. Testing shall be as follows:

(1) Surface hardness shall be determined in accordance with ASTM D2583, except D2583 paras. 6.1, 8.1, 8.2, and 10.1. Allowable surface temperature range shall be 50°F to 90°F (10°C to 32°C). Readings shall not be taken on pits, heavy mold release, or other irregularities that may affect the readings. Only dense resin-rich surfaces shall be tested. The Barcol reading will be the average of five impressions taken at various points broadly distributed about the component or joint so as to provide a representative hardness.

(2) If low Barcol readings are encountered on wax top-coated surfaces, retest after removing the wax by light sanding or scraping.

(3) Barcol test data shall verify that the surface hardness of laminates with glass surfacing veil or carbon surfacing veil has reached at least 90% of the hardness specified by the resin manufacturer for a clear resin casting.

(4) Laminates with organic surfacing veil may have a Barcol reading lower than 90% of the hardness as specified by the resin manufacturer for a clear resin casting. The minimum acceptable Barcol reading shall be established between the User and Fabricator prior to fabrication.

(5) Barcol instruments shall be calibrated prior to and during use using the test discs and procedure recommended by the manufacturer of the Barcol instrument.

(6) The Inspector shall confirm that minimum Barcol hardness values have been established, the test values are within acceptable limits, and the Barcol instrument has been calibrated.

(7) The Inspector shall verify that all potential air-inhibited interior surfaces and overlays, and other surfaces selected at the Inspector's option, shall pass an acetone sensitivity test. For this test, a few drops of acetone are applied to a 1-in.^{2} to 2-in.^{2} (650 mm^2 to 1 300 mm^2) area, which is rubbed slightly until the acetone has evaporated. Tackiness or softness indicates unacceptable cure of the surface resin.

(c) Failure to meet the requirements of these tests shall be considered a nonconformance and corrections shall be made by the Fabricator in accordance with Mandatory Appendix M-7.

(d) The Inspector shall include results and Barcol data from the above tests in the inspection report.

6-920 Dimensions and Laminate Thickness Checks

(a) During the course of fabrication, the Fabricator shall make checks to ensure that dimensions and laminate thicknesses are within the requirements of this Standard and the design. The Fabricator's Quality Control Program shall include procedures and forms, to be used throughout fabrication, to control the ongoing process of checking all dimensions and laminate thicknesses (to ensure that they are within required tolerances) prior to the final inspection.

(b) Refer to Figure 4-9 for mandatory dimensional tolerances. The Inspector shall verify that all these dimensions are within tolerances.

(c) Refer to Figures 4-1 through 4-5, Figure 4-7, and Figures 4-10 through 4-13 for details and tolerances on overlay, flange, nozzle, and manway designs. The Inspector shall select and check several of these details.

(d) Overlays at head-to-shell and shell-to-shell joints and at manways shall be closely inspected and shall conform to the requirements of Part 4.

(e) The Inspector shall select and check several laminate thicknesses critical to the safe performance of the equipment. Approved methods of measurement are outlined in para. 2A-400(e).

(f) *Laminate Thickness and Tolerances*

(1) The nature of existing practical RTP fabrication methods leads to nonparallel and somewhat irregular surfaces of a laminate. Consequently, a single thickness measurement at one point is not sufficient to characterize a laminate thickness at that area of a laminate. Additionally, the thickness measurement of one small area of laminate on a part of the equipment (such as a shell or head) is not sufficient to characterize the laminate thickness of that part. For purposes of characterizing the thickness of laminates, this shall be referred to as *laminate thickness variation.*

(2) The following procedures shall be used to determine thickness:

(-a) *Determining Average Spot Thickness of One Small Area or of a Small Component [Such as a NPS 10 (DN 250) Flange]*. Lightly mark a continuous circle between 4 in. (100 mm) and 12 in. (300 mm) diameter on the component/area to be thickness checked (on a small component/area that will not accommodate a 4 in. (100 mm) diameter circle, mark the circle as large as the small component/area will allow). Select six points to be measured for thickness so that all points are well distributed (not in a line) over the area of the

ASMENORMDOC.COM : Click to view the full PDF of ASME RTP-1 2019

circle. (A hole may occupy a portion of the area of the circle marked, such as on a flange face or at a point where a nozzle will penetrate a vessel wall.) Avoid selection of a spot to be measured that straddles an overlaid joint.

Average the six readings taken; this is the *average spot thickness* of the small area or small component. Record all six measurements in the inspection report.

(-b) Determining the Average Thickness of a Major Part of a Piece of Equipment [Such as a Head, Shell, Nozzle (or Subassembly), or Manway Wall; Body or Manway Flange]. Four average spot thickness measurements shall be taken, located at the discretion of the Inspector, so as to be broadly distributed over a representative area of the part. The Inspector shall locate one area to be measured at what appears to be the thinnest portion of the part and a second area at what appears to be the thickest portion of the part. Avoid selection of spots falling over joints (overlays).

The other two areas shall be located so as to achieve a representative distribution over the area of the part.

Average the four average spot thicknesses; this is the *average thickness of the major part.* Record all measurement data in the inspection report.

(-c) Special Measurement Practices. Cylindrical shells designed with tapered walls or stepped thickness walls require treatment as a multiplicity of parts, where each part to be measured shall represent a wall thickness zone as designated in the design.

The measurement of nozzle or manway cutouts, each to represent one average spot thickness, is a convenient means to arrive at the average thickness of a vessel head or shell.

(3) Refer to Subpart 2C for permissible tolerances on laminate thickness variation.

(4) Variations in thickness may be caused by factors such as resin viscosity, mat or chop density, wetout, fabrication technique, etc. Refer to Mandatory Appendix M-7, para. M7-640, for requirements and procedures to compensate for these variations.

(g) The Inspector shall include results of dimensional and laminate thickness tests in the inspection report.

(h) Balsa Wood Core Laminates. Balsa wood core laminates shall be subject to the same average spot thickness rules as outlined in (f). Average thickness records shall be taken on the interior and exterior laminate in accordance with (f).

(19) **6-930 Physical Property and Laminate Reinforcing Content Tests**

(a) The Fabricator is responsible for producing laminates that will meet or exceed permissible mechanical property values as used in the design and as are established as minimum within Subparts 2A and/or 2B. Laminates shall also be in accordance with the reinforcing sequence and minimum reinforcing content as established in Subparts 2A and/or 2B.

(b) During the course of fabrication, the Fabricator shall ensure that laminate reinforcing and mechanical properties are controlled and are within the requirements of this Standard and the design. The Fabricator's Quality Control Program shall include procedures and forms, to be used throughout fabrication, to control the ongoing process of checking laminate reinforcing and mechanical properties, and to ensure that they are within required tolerances prior to the final inspection.

All such ongoing checks and/or tests done to ensure quality control, but not including Proof Tests as described in (d), may be done by either the Fabricator or an independent testing laboratory and require certification only by the individual who conducted or supervised the testing.

(c) The Inspector shall visually inspect all nozzle and manway cutouts. At least one such cutout from each major component (or fabricated section if a component is fabricated in more than one section) that has a cutout shall be used to verify the reinforcing sequence in accordance with the design drawings. The Inspector shall note the results in the inspection report. With certain laminate reinforcing designs and some resins, it may not be possible to verify reinforcing sequence through visual inspection. In such cases, the Inspector shall require the Fabricator to conduct sufficient laminate burnout tests, in accordance with ASTM D2584, using samples taken from the cutouts, to verify reinforcing sequence through count after the burnout test. For each such test made, the reinforcing content weight percent shall also be determined and recorded in the inspection report.

(d) Laminate Proof Tests are mandatory for all vessels built to this Standard having a MAWP or MAEWP equal to or exceeding 2.0 psig (13.8 kPa). Additionally, Laminate Proof Tests are required on all vessels that are field fabricated and all vessels with an inside diameter equal to or greater than 16 ft (4.9 m).

(1) Fabricators shall verify through Proof Tests that the laminate mechanical property data, the reinforcing sequence, and reinforcing content weight percent data of the as-constructed head or cylindrical shell are in accordance with

(-a) the proof test values required in (3) or (4) shall meet or exceed design values.

(-b) the laminate sequence as specified in the design drawings

(2) Proof Tests may be performed by an independent testing laboratory (contracted by the Fabricator) or by the Fabricator, provided proper test equipment is available. The test results shall be accepted providing the laboratory maintains either ISO Certification that includes internal self audits and third party audits or the laboratory is accredited to conduct the test by the American Association for Laboratory Accreditation. If the laboratory conducting the testing services is not accredited or certified to conduct

ASMENORMDOC.COM : Click to view the full PDF of ASME RTP-1 2019

the tests, then the testing procedures shall be reviewed and witnessed. The User or User's agent shall specify acceptable parties to review the written procedures and witness the testing. In either case, the test results shall be reviewed by a Qualified Designer to determine if they meet the design requirements.

(3) For vessel shells constructed of laminates essentially isotropic in the hoop and axial directions (e.g., Type I or Type II laminates), at least one set of mechanical property tests (ASTM D638, ASTM D3039, or ASTM D5083) and one reinforcing content weight percent test (ASTM D2584) shall be carried out using laminate samples taken from nozzle, shell end trim, or manway cutouts. Data obtained from the tests shall be the tensile strength and tensile modulus of elasticity, the reinforcing content weight percent, and the reinforcing sequence.

(4) For cylindrical shells constructed of anisotropic laminates (e.g., filament wound laminates), the following mechanical property tests are required: flexural strength and modulus in the hoop and axial directions (corrosion barrier in compression; ASTM D790), and tensile strength and modulus in the axial direction (ASTM D638). The reinforcing content weight percent (ASTM D2584) and the reinforcing sequence shall also be determined.

(5) Specimen requirements shall be as follows:

(-a) Test specimens shall not be machined on the inner or outer surface.

(-b) Specimens prepared from cylinder cutouts for isotropic laminates as defined above shall be cut in the axial direction of the cylinder to minimize surface curvature.

(-c) Specimens prepared from flat laminates containing woven roving shall have their long axis parallel to the warp of the woven roving.

(-d) When the design requires that all or a portion of the corrosion barrier is to be excluded as a contributor to the structural strength of a laminate, then tests of laminates as fabricated would not yield correct data. In such cases, that portion to be excluded as a contributor to structural strength shall be removed from test specimens prior to testing. By so doing, tensile strength and tensile modulus test data produced may be compared with the actual structural design values used and the thicknesses of structural portions of laminates that were specified in the design.

This may be conveniently accomplished by placing a piece of release film on (or within) the corrosion barrier during lamination of the shell, at manway cutout location, or on an extended length of shell near the mandrel end.

CAUTION: Mark the release film location prominently! A failure to completely remove material covering release film could cause delamination during service.

Test samples shall then be prepared from material taken from the release film location.

(e) The Inspector shall include copies of all mechanical property and reinforcing content Proof Test reports in the inspection report.

6-940 Laminate Imperfections — Visual Inspection

(a) During the course of fabrication, the Fabricator shall make all such checks necessary to ensure that laminate imperfections (as defined in Table 6-1) are within the requirements of this Standard and the Visual Inspection Acceptance Level as specified in the UBRS. The Fabricator's Quality Control Program shall include procedures and forms to be used to control the ongoing process of laminate fabrication so as to ensure that imperfections are within required tolerances prior to the final inspection.

(b) Prior to making a visual examination, the Inspector shall review the UBRS to determine which Visual Inspection Acceptance Level has been specified.

(c) The Inspector shall visually check interior and exterior surfaces. (Inspection may be made with the aid of a light placed behind the section to detect air voids, delamination, lack of fiber wetting, and other imperfections as described in Table 6-1.)

(d) Visual inspection shall be made before an exterior pigmented coating or insulation is applied to the shell or heads of a vessel. Where exterior pigmentation or insulation has been specified, the Fabricator, User, and Inspector must discuss and agree on visual inspection methods and arrange for closely timed and scheduled inspections.

(e) The Inspector shall record the results of the visual inspection in the inspection report.

(f) *Balsa Wood Core Laminates*

(1) Visual inspection of the component shall be required from the interior side of the laminate to check for delamination of the balsa wood core.

(2) Laminates that are to have a balsa wood core applied over them after resin saturation and prior to curing shall be visually inspected prior to applying the balsa wood core.

(3) The Fabricator shall take the appropriate measures to ensure adhesion of the interior laminate to the balsa wood core.

6-950 Pressure Tests and Acoustic Emission Tests (19)

(a) A water fill hydrostatic test shall be performed on all vessels with MAWP above 0.50 psig (3.4 kPa). The test pressure at the top of the vessel shall be 110% to 120% of the design pressure.

(b) A vessel with MAWP at or below 0.5 psig (3.4 kPa) shall be filled with water to at least its full designated liquid capacity, regardless of the specific gravity of the material to be contained.

ASMENORMDOC.COM : Click to view the full PDF of ASME RTP-1 2019

(c) Vessels with an inside diameter less than or equal to 16 ft (4.9 m) and with MAEWP less than or equal to 6.0 in. (152 mm) of water, and vessels larger than 16-ft (4.9 m) inside diameter with MAEWP less than or equal to 1.0 in. (25 mm) of water, are exempt from vacuum testing. All other vessels designed for vacuum service shall be evacuated to the MAEWP.

WARNING: Suitable precautionary measures shall be taken to protect personnel and property from a catastrophic implosion failure during the test.

It should be noted that attainment of full vacuum is not practical. When the design vacuum cannot be achieved, the User or User's Agent and the Fabricator shall agree on the absolute internal pressure to be achieved during the test. Internal test pressure shall be 12 psig or lower for vessels with a design vacuum that exceeds 12 psig external pressure. Such agreement shall be reached prior to the start of fabrication and shall be documented in the UBRS and pressure test inspection report.

(d) The Fabricator shall have written procedures for pressure testing. The test pressure shall be held for a minimum of 2 hr. No visible leakage is permissible during the 2-hr hold on an internal pressure test. Some leakage is permissible during a vacuum test, provided the vacuum test pressure is held for the 2-hr minimum. (This may require continuous connection to the vacuum source.) Subsequent to all pressure testing, the vessel shall pass a visual inspection per para. 6-940. During pressure testing, vessels shall be supported similar to the way they will be supported in service (so that the loads imposed on the vessel and the supports are similar to those of the expected service loads). If the pressure test generates an upward force, all anchor bolts shall be secured. Vertical vessels may be hydrotested in the horizontal position if agreed upon by the User or User's Agent and Fabricator, and indicated in the UBRS. The pressure at the highest point of the vessel in the test position shall be equal to 110% to 120% of the total pressure (hydrostatic plus design) at the lowest point in the design position. The User is cautioned that the horizontal test of a vertical vessel will not simulate all of the loading conditions of its final installed position.

(e) When it is not practical to conduct a pressure test until the equipment has been installed in service position, the test may be conducted at the installation site.

(f) The Inspector shall witness all pressure tests, verify the test results, and record results of the test in the inspection report.

(g) If acoustic emission tests are required by the UBRS or are mandatory under design provisions of this Standard [see para. 3B-500(c)], the Inspector shall witness the tests and verify that the procedures used were in accordance with Mandatory Appendix M-8.

6-960 Procedures for Rectifying Nonconformities or Imperfections

Mandatory Appendix M-7 describes approved procedures for rectifying nonconformities or imperfections.

Mandatory documentation requirements for rectifying nonconformities or imperfections are outlined in Mandatory Appendix M-4, para. M4-400(e).

The Inspector shall include the documentation of nonconformity or imperfection rectification in the inspection report.

ASMENORMDOC.COM : Click to view the full PDF of ASME RTP-1 2019

(19)

Table 6-1 RTP Visual Inspection Acceptance Criteria

Definition of Visual Inspection Levels (to be Specified by User or User's Agent): Level ① = Critically Corrosion Resistant Level ② = Standard Corrosion Resistant		Maximum Size and Cumulative Sum of Imperfections Allowable [After Repair. See General Notes (a) and (b). Imperfections Subject to Cumulative Sum Limitation are Highlighted With an Asterisk.]						
		Inner Surface Veil(s), Surfacing Mat		Interior Layer [–0.125 in. (3 mm) Thick] Mat or Chopped Strand Spray Layers		Structural Layer Balance of Laminate (Including Outer Surface)		
Imperfection Name	**Definition of Imperfection**	**Level ①**	**Level ②**	**Level ①**	**Level ②**	**Level ①**	**Level ②**	**Notes**
Burned areas	Showing evidence of thermal decomposition through discoloration or heavy distortion	None	None	None	None	None	Never in more than one ply and not to exceed 16 in.^{2} (10,000 mm^2) in any vessel	Discoloration only, never delamination or decomposition
Chips (surface)	Small pieces broken off an edge or surface	*$^1/_8$ in. (3 mm) diameter max. by 30% of veil(s) thickness max.	*$^1/_8$ in. (3 mm) diameter max. by 50% of veil(s) thickness max.	...	...	*$^1/_4$ in. (6 mm) diameter or $^1/_2$ in. (13 mm) length max. by $^1/_{16}$ in. (1.5 mm) deep	*$^1/_2$ in. (13 mm) diameter or 1 in. (25 mm) length max. by $^1/_{16}$ in. (1.5 mm) deep	...
Cracks	Actual ruptures or debond of portions of the structure	None	None	None	None	None	None	Not to include areas to be covered by joints
Crazing (surface)	Fine cracks at the surface of a laminate	None	None	...	...	Max. 1 in. (25 mm) long by $^1/_{64}$ in. (0.40 mm) deep, max. density 3 in any 12″ × 12″ (300 mm × 300 mm) area	Max. 2 in. (50 mm) long by $^1/_{64}$ in. (0.40 mm) deep, max. density 5 in. (125 mm) any 12″ × 12″ (300 mm × 300 mm) area	...
Delamination (internal)	Separation of the layers in a laminate	None	None	None	None	None	*None in three plies adjacent to interior layer, none larger than 1 in.^{2} (650 mm^2) total area	...
Dry spot (surface)	Area of surface where the reinforcement has not been wetted with resin	None	None	...	...	None	None	...
Edge exposure	Exposure of multiple layers of the reinforcing matrix to the vessel contents, usually as a result of shaping or cutting a section to be secondary bonded (interior of vessel only)	None	None	...	...	None	None	Edges exposed to contents shall be covered with same number of veils as inner surface
Foreign inclusion	Particles included in a laminate that are foreign to its composition (not a minute speck of dust)	* $^3/_{16}$ in. (4.5 mm) long max. by dia. or thickness not more than 30% of veil(s) thickness	*$^1/_4$ in. (6 mm) long max. by dia. or thickness not more than 50% of veil(s) thickness	*$^1/_2$ in. (13 mm) long max. by dia. or thickness not more than 30% of interior layer thickness	*$^1/_2$ in. (13 mm) long max. by dia. or thickness not more than 50% of interior layer thickness	*Dime size, (18 mm) never to penetrate lamination to lamination	*Nickel size, (21 mm) never to penetrate lamination to lamination	Shall be fully resin wetted and encapsulated

ASMENORMDOC.COM : Click to view the full PDF of ASME RTP-1 2019

Table 6-1 RTP Visual Inspection Acceptance Criteria (Cont'd)

Definition of Visual Inspection Levels (to be Specified by User or User's Agent): Level ① = Critically Corrosion Resistant Level ② = Standard Corrosion Resistant		Maximum Size and Cumulative Sum of Imperfections Allowable [After Repair. See General Notes (a) and (b). Imperfections Subject to Cumulative Sum Limitation are Highlighted With an Asterisk.]						
		Inner Surface Veil(s), Surfacing Mat		Interior Layer [–0.125 in. (3 mm) Thick] Mat or Chopped Strand Spray Layers		Structural Layer Balance of Laminate (Including Outer Surface)		
Imperfection Name	**Definition of Imperfection**	**Level ①**	**Level ②**	**Level ①**	**Level ②**	**Level ①**	**Level ②**	**Notes**
Gaseous bubbles or blisters	Air entrapment within, on, or between plies of reinforcement, 1/64 in. (0.40 mm) diameter and larger	Max. diameter 1/16 in. (1.5 mm) by 30% of veil(s) thickness deep	Max. diameter 1/16 in. (1.5 mm) by 50% of veil(s) thickness deep	Max. diameter 1/8 in. (3 mm)	Max. diameter 1/8 in. (3 mm)	Max. diameter 3/16 in. (4.5 mm)	Max. diameter 1/4 in. (6 mm)	Shall not be breakable with a sharp point
		← Refer to User's Specification for quantity limitations →						
Pimples (surface)	Small, sharp, conical elevations on the surface of a laminate	*Max. height or diameter 1/64 in. (0.40 mm)	*Max. height or diameter 1/32 in. (0.80 mm)	...	...	← No limit →		Shall be fully resin filled and wetted; generally, captured sanding dust
Pit (surface)	Small crater in the surface of a laminate	*1/8 in. (3 mm) diameter max. by 30% of veil(s) thickness max.	*1/8 in. (3 mm) diameter max. by 50% of veil(s) thickness max.	...	...	*1/4 in. (6 mm) diameter max. × 1/16 in. (1.5 mm) deep max.	*1/4 in. (6 mm) diameter max. × 3/32 in. (2.5 mm) deep max.	No fibers may be exposed
Porosity (surface)	Presence of numerous visible tiny pits (pinholes), approximate dimension 0.005 in. (0.125 mm) (for example, 5 in any 1 in. × 1 in. (25 mm × 25 mm) area	None more than 30% of veil(s) thickness	None more than 50% of veil(s) thickness	...	...	None to fully penetrate the exterior gel coat or gel coated exterior veil; no quantity limit		No fibers may be exposed
Scratches (surface)	Shallow marks, grooves, furrows, or channels caused by improper handling	*None	*None	...	...	*None more than 6 in. (150 mm) long	*None more than 12 in. (300 mm) long	No fibers may be exposed
Blisters (surface)	Rounded elevations of the surface, somewhat resembling a blister on the human skin; not reinforced; fully resin filled	*None over 3/16 in. (4.5 mm) diameter by 1/16 in. (1.5 mm) in height	*None over 3/16 in. (4.5 mm) diameter by 1/16 in. (1.5 mm) in height	...	...	← No limit →		Drips loosely glued to the surface shall be removed
Wet-out (inadequate)	Resin has failed to saturate reinforcing (particularly woven roving)	None	None	None	None	Dry mat or prominent and dry woven roving pattern not acceptable; discernible but fully saturated woven pattern acceptable		Degree of saturation of layers of reinforcement may be determined by splitting cutouts
Wrinkles and creases	Generally linear, abrupt changes in surface plane caused by laps of reinforcing layers, irregular mold shape, or mylar overlap	Max. deviation 20% of wall or 1/16 in., (1.5 mm) whichever is less	Max. deviation 20% of wall or 1/8 in., (3 mm) whichever is less	...	...	Max. deviation 20% of wall or 1/8 in., (3 mm) whichever is less		Not to cause a cumulative linear defect (outside defect adding to inside defect)

ASMENORMDOC.COM : Click to view the full PDF of ASME RTP-1 2019

Table 6-1 RTP Visual Inspection Acceptance Criteria (Cont'd)

Definition of Visual Inspection Levels (to be Specified by User or User's Agent): Level ① = Critically Corrosion Resistant Level ② = Standard Corrosion Resistant		Maximum Size and Cumulative Sum of Imperfections Allowable [After Repair. See General Notes (a) and (b). Imperfections Subject to Cumulative Sum Limitation are Highlighted With an Asterisk.]						
		Inner Surface Veil(s), Surfacing Mat		Interior Layer [–0.125 in. (3 mm) Thick] Mat or Chopped Strand Spray Layers		Structural Layer Balance of Laminate (Including Outer Surface)		
Imperfection Name	Definition of Imperfection	Level ①	Level ②	Level ①	Level ②	Level ①	Level ②	Notes
Allowable cumulative sum of high-lighted imperfections	Maximum allowable in any 12 in. × 12 in. (300 mm × 300 mm) area	3	5	3	5	5	5	...
	Maximum allowable in any 36 in. × 36 in. (900 mm × 900 mm) area	15	20	20	30	30	40	...
Maximum % repairs	The maximum allowable area of repairs made in order to pass visual inspection	3%	10%	3%	10%	3% to structural, no limit to outer surface repairs	10% to structural, no limit to outer surface repairs	...

GENERAL NOTES:

(a) Above acceptance criteria apply to condition of laminate after repair and hydrotest.

(b) Noncatalyzed resin is not permissible in any area of the laminate.

(c) Refer to Mandatory Appendix M-7 for rules on repairs.

ASMENORMDOC.COM : Click to view the full PDF of ASME RTP-1 2019

Part 7
Shop Qualification

7-100 SCOPE

This Part covers the requirements a Fabricator shall meet in order to qualify capability in accordance with this Standard. Included are the Fabricator's facilities, personnel, Quality Control Program, and required demonstration of capability.

7-200 GENERAL

A Fabricator shall seek to fabricate vessels according to the rules of this Standard only in the general size range for which the shop has experience.

7-210 Shop Survey

Fabricators who desire a shop location to be certified according to the rules of this Standard shall be surveyed by an ASME survey team. The survey team shall verify that all requirements of Parts 7 and 8 are met.

7-300 FABRICATOR'S FACILITIES AND EQUIPMENT

(a) The shop area and field site shall have designated areas for

(1) storage of resin, catalyst, promoter, solvent, and other chemicals

(2) resin mixing and dispensing

(3) bulk reinforcement and core material storage

(4) tools and maintenance materials

(b) Head molds (other than cone shapes or flat covers) shall be as follows:

(1) ASME torispherical flanged and dished heads, a 2:1 semielliptical head, or a hemispherical head

(2) flanged flat head molds that will produce heads that satisfy para. 3A-260 and Figure 4-2

(c) Laboratory equipment shall be available for the quality control of bulk resin, reinforcing materials as received, and resin mixes as dispensed to fabrication personnel. Refer to Mandatory Appendices M-1 and M-2.

7-400 PERSONNEL

The Fabricator's organization shall include specific personnel designated for each function listed below:

(a) *Design and Drafting*. As an alternative, this function may be performed by outside qualified engineering personnel. Design and drafting will be in accordance with requirements in Parts 1, 3, 4, and 6 of this Standard.

(b) *Quality Control*. See Mandatory Appendix M-4.

(c) *Material Control and Issue*. This will include mixing and testing of resins, and inspection and cutting of reinforcement. See Mandatory Appendices M-1 and M-2.

(d) *Fabrication*

(e) *Laminators and Secondary Bonders*. Laminators and Secondary Bonders shall be qualified in accordance with Mandatory Appendix M-5.

7-500 QUALITY CONTROL PROGRAM, DOCUMENT HANDLING, AND RECORD SYSTEM

(a) The Fabricator shall establish and maintain an effective Quality Control Program throughout all phases of the fabricating process to ensure that all applicable requirements of this Standard are met. Refer to Part 6, Mandatory Appendix M-4, and Nonmandatory Appendix NM-6.

(b) The Fabricator shall have a procedure that ensures only the most current revision of the latest and/or correct drawings, specifications, purchase orders, and quality control procedures are used for procurement, fabrication, and inspection purposes.

(c) A record keeping system satisfying the requirements of this Standard shall be in use and available for audit by the Certified Individual, the Inspector, and the User's representative.

7-600 DEMONSTRATION OF CAPABILITY (DEMONSTRATION LAMINATES) (19)

(a) Each Fabricator's shop shall demonstrate the ability to fabricate laminates as required by the rules of this Standard. This initial demonstration qualifies the Fabricator to produce laminates by those specific processes qualified for a maximum period of 5 yr.

(b) Each Fabricator's shop must redemonstrate the ability to fabricate laminates, as required by the rules of this Standard, at no greater intervals than 5 yr. The Fabricator may redemonstrate the ability to fabricate a laminate using either of the following methods:

ASMENORMDOC.COM : Click to view the full PDF of ASME RTP-1 2019

(19) **Table 7-1 Required Resins and Acceptable Fabrication Processes for Demonstration Laminates**

Type [Note (1)]	Initial Demonstration Laminate Thickness, in. (mm)	Redemonstration Laminate Min. Thickness, in. (mm) [Note(2)]	Required Resins [Note (3)]	Fabrication Process [Note (4)]	Qualification
Type I	0.48 (12.2)	0.25 (6.4)	1 polyester or 1 vinyl ester	1, 2	All resins, all thicknesses
Type II	0.49 (12.4)	0.37 (9.4)	1 polyester or 1 vinyl ester	1, 2	All resins, all thicknesses
Filament wound	0.37 (9.4) min.	0.37 (9.4)	1 polyester or 1 vinyl ester	3	All resins, all thicknesses

GENERAL NOTES:
(a) A Fabricator shall qualify all fabrication processes to be used to construct vessels to this Standard.
(b) For initial certification, see para. M6-200(b).

NOTES:
(1) Designates laminate reinforcement type.
(2) For redemonstration laminates, the fabrication process for Types I and II laminates may be 1 or 2.
(3) Generic classes of resins required for qualification.
(4) Process employed to produce the laminate:
1 — Hand lay-up.
2 — Spray-up using a chopper gun device.
3 — See para. 7-620(b).

(1) produce acceptable demonstration laminates as required by the rules of this Standard for initial qualification

(2) provide acceptable Proof Tests for a specific type of laminate and specific process per para. 6-930(d) [all requirements of paras. 7-600 through 7-620 are met with the completion of a successful Proof Test]

(c) Subparts 2A and/or 2B provide specific rules governing all laminates and refer to design basis laminates that a Fabricator is required to make in order to establish values for strength, thickness, and glass content. The demonstration laminates required by this Part are for the purpose of qualifying the Fabricator and shop procedures. They may also be used to qualify Laminators (see Mandatory Appendix M-5). Demonstration laminates and design basis laminates are not the same in purpose; hence requirements in terms of configuration, quantity to be produced, and tests may differ.

(d) Initial demonstration laminates and the redemonstration of the Fabricator's ability to fabricate laminates are required for each type of laminate and each laminating process the Fabricator shall use on vessels fabricated to this Standard; refer to Table 7-1 [see (b)(2)].

(e) Each demonstration laminate shall be identified and labeled by the Fabricator in accordance with para. 7-900.

(f) Demonstration laminates shall be tested in accordance with this Standard by an independent testing laboratory. The independent testing laboratory shall return the remains of the demonstration laminate and specimens with a certified written report. The report shall state the results of the tests.

(g) A Fabricator's shop is qualified to produce a specific type of laminate by a specific process provided the certified test report indicates that the demonstration laminate meets or exceeds the requirements of this Standard (see para. 7-700).

(h) Upon the successful completion of a Demonstration Laminate Test Program, Fabricators shall complete a document of "Demonstration Laminate Certification." This document is to be maintained within the Fabricator's quality control files and a copy shall be made available to the User, User's Agent, or Inspector on request. In this document, the Fabricator shall certify, via the dated signature of the Fabricator's authorized agent, the following:

(1) The demonstration laminate samples were constructed according to all requirements of this Standard.

(2) Tests were conducted on the demonstration laminates according to all requirements of this Standard.

(3) The test data have been carefully examined by the Fabricator, and the results are in accordance with all requirements of this Standard.

(4) The next required date for demonstration of capability via demonstration laminates shall be indicated.

(5) Test reports from the independent testing laboratory are referenced by the specific date and/or reference number within the certification document and a copy attached thereto.

7-610 Hand Lay-Up and Spray-Up Demonstration Laminates (19)

(a) All Fabricators shall produce and qualify hand lay-up Types I and II laminates in accordance with requirements in Tables 7-1 through 7-3.

ASMENORMDOC.COM : Click to view the full PDF of ASME RTP-1 2019

(19) **Table 7-2 Dimensional Requirements for Hand Lay-Up and Spray-Up Demonstration Laminates**

Req. No.	Requirements
(1)	A demonstration laminate shall be square within ±0.3 deg, measuring 24 in. ±$^{1}/_{16}$ in. (600 mm ± 1.50 mm) on each side.
(2)	The peak deviation from flatness of the inner surface shall not exceed $^{3}/_{16}$ in. (4.5 mm)
(3)	The average spot thickness of a demonstration laminate shall be determined by +procedures outlined in para. 6-920 and shall be within tolerances established in Subpart 2C.
(4)	Edges of a demonstration laminate shall be smooth and not jagged. Edge indentation or chips shall not exceed $^{1}/_{32}$ in. (0.80 mm) in depth.
(5)	For demonstration laminates made by the spray-up process, a 24 in. × 24 in. (600 mm × 600 mm) test sample shall be cut from the center of an approximately 30 in. × 30 in. (750 mm × 750 mm) laminate.

(b) Fabricators who plan to produce laminates by the spray-up (chopper gun) process shall also produce and qualify spray-up Types I and II laminates in accordance with requirements in Tables 7-1 through 7-3.

(c) After fabrication, the Fabricator shall identify each demonstration laminate in accordance with the instructions in para. 7-900.

(d) The quality control records shall contain a description of the fabrication procedure used to produce each demonstration laminate.

(e) The mechanical properties of each demonstration laminate shall be determined in accordance with para. 7-1000.

(19) **7-620 Filament Wound Demonstration Laminates**

(a) Fabricators who plan to produce laminates by the filament winding process shall produce and qualify filament wound laminates in accordance with the requirements in Table 7-1. Qualification for filament winding shall be in addition to qualification for Type I or II laminates.

NOTE: Both qualifications are required for Fabricators planning to construct filament wound vessels to this Standard, as Type I or II laminates are required for the fabrication of heads or when joining the subassemblies of vessels together.

(b) Since there are many process variations employed to produce filament wound laminates, each requiring distinctly different tooling, controls, and skills, this Standard requires that a Fabricator qualify all the process variations to be used in the construction of filament wound vessels to this Standard.

Some examples of process variations, each requiring a demonstration laminate, are

(1) dry continuous filament winding
(2) wet (bath) continuous filament winding
(3) tape winding in conjunction with (1) or (2)
(4) spray-up in conjunction with (1) or (2)

It is possible to qualify more than one of the above variables in a single demonstration laminate, as long as the resulting laminating process shall routinely be employed to produce vessels to this Standard.

(c) Demonstration laminates shall have a Type I hand lay-up or spray-up liner over which the structural filament wound layer is applied. This liner shall exotherm and cool before the structural filament wound layer is applied.

(d) A minimum of one ply of 0.75-oz/ft^2 (225 g/m^2) chopped strand mat or an equivalent weight by the chopped spray method shall be applied over the liner immediately before starting the filament wound structural layer.

(e) A filament wound demonstration laminate shall be a 24 in. × 24 in. ±$^{1}/_{16}$ in. (600 mm × 600 mm ± 1.50 mm) section cut from a hoop, which wound on a mandrel with a minimum diameter of 8 ft (2.4 m) to minimize the effects of curvature on sample testing. The width of the hoop shall be greater than 24 in. (600 mm) by a margin sufficient to avoid turnaround areas in the 24 in. × 24 in. (600 mm × 600 mm) cut section from which test samples shall be taken.

(f) The thickness of the demonstration laminate shall be 0.37 in. (9.4 mm) minimum, but may be increased up to 0.63 in. (16 mm) to allow for variations in winding or laminating sequences that require thicknesses over 0.37 in. (9.4 mm) to complete.

(g) Filament wound demonstration laminates shall be tested in accordance with para. 7-1000. Tensile strength and tensile modulus per para. 7-1000(c) shall be obtained in the axial direction only. Also, disregard para. 7-1000(a)(2).

(h) Refer to para. 7-900(a)(4). Fabricators shall provide a comprehensive description of the filament wound laminate sequence.

7-700 MINIMUM TEST VALUES FROM DEMONSTRATION LAMINATES

(a) Type I or II Demonstration Laminates

(1) Dimensions shall be within tolerances outlined in Table 7-2.

(2) Barcol hardness readings shall show that 80% of the readings meet or exceed 90% of the resin manufacturer's published casting hardness data.

(3) Tensile strength and tensile modulus values shall meet or exceed the values given in Table 2A-3.

(b) Filament Wound Demonstration Laminates

(1) Dimensions shall be within tolerances outlined in paras. 7-620(e) and 7-620(f).

(2) Refer to (a)(2) for Barcol hardness requirements.

(3) Axial tensile strength and tensile modulus values shall meet or exceed those values given for a Type I laminate in Table 2A-3.

ASMENORMDOC.COM : Click to view the full PDF of ASME RTP-1 2019

(19) **Table 7-3 Reinforcement Requirements for Hand Lay-Up and Spray-Up Demonstration Laminates**

Laminate Type	Nominal Thickness, in. (mm) [Notes (1), (2)]	Liner Plies			Structural Plies									
		1	2	3	4	5	6	7	8	9	10	11	12	13
Type I	0.48 (12.2)	*V*	*M*	*M*	*M*	*M*	*M*	*M*	*M*	*M*	*M*	*M*	*M*	...
Type II	0.49 (12.4)	*V*	*M*	*M*	*M*	*R*	*M*	*R*	*M*	*R*	*M*	*M*	*R*	*M*

GENERAL NOTES:

(a) Actual thickness and glass content of each sequence of plies shall be established by each Fabricator based on the Fabricator's design basis laminate.

(b) Corrosion barrier (plies 1, 2, and 3) shall gel and exotherm before structural plies are added.

(c) Structural lay-up may be interrupted long enough to exotherm between adjacent *"MM"* plies. If required by fabrication procedure, location of exotherm plies may be changed by shifting ply 10 within the laminate body or by splitting an *"M"* ply into weight-equivalent layer(s).

(d) A weight equivalent layer or layers of chopped strand glass or mat may be used in place of layers of 1.5-oz/ft^2 (450 g/m^2) mat.

NOTES:

(1) Nominal thickness shall be calculated as follows:
V = 10 mil surface mat (veil) – 0.010 in./ply (0.25 mm/ply)
M = 1.5 oz/ft^2 mat – 0.043 in./ply (450 g/m^2 mat – 1.1 mm/ply)
R = 24 oz/yd^2 woven roving – 0.033 in./ply (810 g/m^2 woven roving – 0.84 mm/ply)

(2) This information is based on historical data and may not reflect all laminates made today. Laminates made today are often thinner and have a higher glass content than noted in the Table. The Table should be used for establishing minimum glass plies per nominal laminate thickness. Ply thicknesses should be based on design basis laminates.

7-800 DEMONSTRATION VESSEL

Fabricators shall design, fabricate, and satisfactorily test a demonstration vessel in accordance with instructions contained in Mandatory Appendix M-6.

The design and fabrication of the demonstration vessel requires a comprehensive understanding of this Standard. It involves a full demonstration of the Fabricator's ability to design, execute drawings, qualify demonstration laminates, establish design values from design basis laminates, qualify Laminators and Secondary Bonders, and fabricate under effective overview of the Fabricator's Quality Control Program, all in full accordance with the requirements of this Standard.

No Fabricator shall claim qualification to fabricate to this Standard until having satisfactorily completed and tested the demonstration vessel in accordance with the instructions in Mandatory Appendix M-6.

7-900 IDENTIFYING DEMONSTRATION LAMINATES

(a) Identification Report. A complete identification report shall accompany each demonstration laminate. This shall include the following:

(1) Fabricator's shop name, address, phone number

(2) identification of person fabricating the laminate

(3) date the laminate was completed

(4) fabrication process

(5) description of fabrication materials used

(-a) resin manufacturer's name and designation for resin

(-b) generic class of resin

(-1) polyester

(-2) vinyl ester

(-c) reinforcement manufacturer's name(s) and designation for reinforcement(s)

(b) Labeling. The Fabricator shall clearly label each demonstration laminate with the following:

(1) name of the Fabricator's shop and identification of person who fabricated the laminate

(2) date laminate was completed

(3) type of laminate (Type I, Type II, filament wound)

(4) inner surface and outer surface shall be identified

(5) the two warp strand edges on Type II laminates, and hoop and axial directions on filament wound laminates, shall be identified

(6) resin and reinforcement manufacturers and their Manufacturer's Specific Product Identifications (MSPI)

7-1000 LABORATORY TEST AND TEST REPORT REQUIREMENTS FOR DEMONSTRATION LAMINATES (19)

The demonstration laminate specimen shall be tested, and information recorded and reported, in accordance with the following requirements:

(a) Dimensional Measurements of the Demonstration Laminate

(1) The length and width of the demonstration laminate shall be measured and recorded.

(2) The flatness of the demonstration laminate shall be determined by measuring the maximum possible gap under a straightedge placed on the veil side and moved to achieve a maximum gap; this gap shall be recorded. (Does not apply to filament wound laminates.)

(3) The average thickness of the demonstration laminate shall be determined using the procedures outlined in para. 6-920(f)(2)(-a). All measurement data shall be

ASMENORMDOC.COM : Click to view the full PDF of ASME RTP-1 2019

recorded. Measurements should be taken at the approximate center of the demonstration laminate.

(4) The testing report shall summarize measurements taken and state compliance or nonconformance with the requirements of this Standard. Reference is made to Table 7-2, paras. 7-620(e) and 7-620(f), and Subpart 2C.

(b) Barcol Hardness and Acetone Sensitivity Test

(1) Barcol hardness shall be determined on the demonstration laminate inner surface in accordance with para. 6-910(b), and all Barcol readings shall be recorded.

(2) 80% of the Barcol hardness readings taken shall meet or exceed 90% of the resin manufacturer's published hardness data.

(3) An acetone sensitivity test shall be conducted in accordance with para. 6-910(b)(7).

(4) The testing report shall summarize the Barcol hardness measurements and the results of the acetone sensitivity test, and state compliance or nonconformance with the requirements of this Standard.

(c) Tensile Strength and Tensile Modulus of Elasticity

(1) Tensile strength and tensile modulus of elasticity shall be determined using the method given in ASTM D638, ASTM D3039, or ASTM D5083.

(2) Test specimens shall be taken from equally spaced areas on the demonstration laminate. Specimens shall be cut parallel to the edge of the laminate and the procedure must not chip, tear, or degrade the specimens. Type II test specimens shall be cut parallel to the labeled warp strand edge. The thickness of the specimens shall be the full thickness of the laminate and must not be machined on the inner or outer surfaces. Both hoop and axial test coupons are required for anisotropic laminates.

(3) Test specimens shall be machined to the dimensions shown in Figure 7-1.

(4) The testing report shall include the following data and shall state compliance or nonconformance with the requirements of this Standard (see para. 7-700):

(-a) testing speed, in./min (mm/min)

(-b) width and thickness of each specimen, in. (mm)

(-c) peak load for each specimen, lb (N)

(-d) tensile strength of each specimen, psi (MPa)

(-e) tensile modulus of elasticity of each specimen, psi (GPa)

(-f) average tensile strength, psi (MPa)

(-g) average tensile modulus, psi (GPa)

(d) Glass Content and Reinforcing Sequence

(1) The glass content weight percent shall be determined by the method given in ASTM D2584.

(2) A 1-in. (25 mm) wide strip shall be cut from the demonstration laminate. This strip shall be cut into three 1-in. (25 mm) long specimens.

(3) The testing report shall include the following data and shall state compliance or nonconformance with the requirements of this Standard (see para. 7-700):

(-a) pyrolysis temperature.

(-b) specimen weight before ignition, g.

(-c) weight of specimen plus crucible, before ignition and after ignition, g.

(-d) reinforcing sequence identification in the general form of Table 2A-2; report in drafting symbol style (by visual inspection). This identification is not required for Type I laminates.

(-e) ignition loss for each specimen, g.

(-f) resin content of each specimen and average, wt %.

(-g) glass content of each specimen and average, wt %.

ASMENORMDOC.COM : Click to view the full PDF of ASME RTP-1 2019

Figure 7-1 Dimensions for Tensile Test Specimen

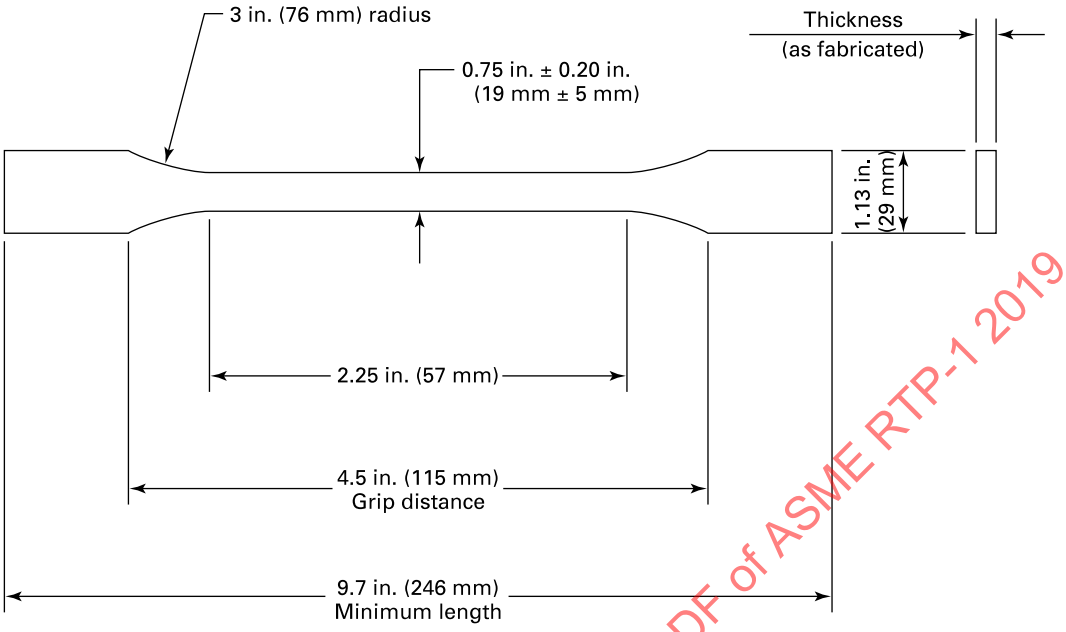

ASMENORMDOC.COM : Click to view the full PDF of ASME RTP-1 2019

Part 8
Certification

8-100 SCOPE

Part 8 provides rules for certification of Fabricators of RTP vessels.

8-200 GENERAL

A certified Fabricator is one who holds a valid ASME RTP-1 Certificate of Authorization. The Certificate of Authorization permits the Fabricator to stamp the vessel with the ASME Certification Mark with RTP Designator, certifying that the vessel complies with all requirements of this Standard and ASME CA-1.

The responsibilities set forth herein relate only to compliance with this Standard and are not to be construed as involving contractual or legal liabilities.

8-300 CERTIFICATION PROCESS

8-310 Application

(a) Application for ASME RTP-1 Certification and the Certification Mark stamp shall be in accordance with ASME CA-1, para. 2.1.

(b) When requested by the applicant on forms designated by ASME, ASME will arrange for an evaluation of the applicant's Quality Control Program and shop qualifications.

8-320 Quality Control Program

The Quality Control Program shall meet the requirements of paras. 1-500, 8-325, and ASME CA-1, paras. 2.2 and 2.3.

8-325 Changes to Quality Control Program. If the Certificate Holder wishes to make changes to the Quality Control Program, the Certificate Holder shall submit the proposed changes to ASME for approval, which shall accept or reject them in writing.

8-330 Evaluation of Quality Control Program

Evaluation of the Quality Control Program shall meet the requirements of ASME CA-1, paras. 2.2 and 2.3. The acceptance by ASME of a Quality Control Program shall not be interpreted to mean endorsement of technical capability to perform design work.

8-340 Evaluation of Shop Qualification

The evaluation shall be in accordance with Part 7.

8-350 Verification of Shop Qualification

An organization applying for a Certificate of Authorization shall have its shop(s) surveyed by an ASME-approved survey team to ensure that all requirements of the Standard are met.

8-400 ASME RTP-1 CERTIFICATE OF AUTHORIZATION HOLDER

A Fabricator shall obtain a valid Certificate of Authorization in accordance with para. 1-520 and ASME CA-1, in order to stamp the vessel.

8-410 Additional Responsibilities of the ASME RTP-1 Certificate Holder

Responsibilities include the following:

(a) evaluation and approval of material manufacturers, and suppliers of parts and subcontracted services, in accordance with Mandatory Appendix M-4

(b) establishing and maintaining a Quality Control Program in accordance with Mandatory Appendix M-4

(c) preparing and filing a Quality Control Program manual per ASME CA-1, para. 2.3.4 and Table 1

(d) furnishing the User or User's Agent with the appropriate Fabricator's Data Report(s)

(e) capability of testing per para. 6-950

(f) ability to meet the requirements of ASME CA-1, paras. 2.1, 5.2, and 5.3

8-420 Subcontracting

The Fabricator completing any vessel to be marked with the ASME Certification Mark with RTP Designator has the responsibility of ensuring that any work done by others complies with all the requirements of this Standard and ASME CA-1.

8-500 ISSUANCE OF CERTIFICATION

The requirements of ASME CA-1, para. 2.4 shall apply.

8-550 Maintaining Certification

The requirements of ASME CA-1, para. 2.5 shall apply.

ASMENORMDOC.COM : Click to view the full PDF of ASME RTP-1 2019

Figure 8-1 Official ASME Certification Mark With RTP Designator

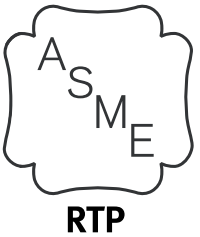

8-560 Renewal of Certification

The requirements of ASME CA-1, para. 2.6 shall apply.

8-570 Suspension of Certification

The requirements of ASME CA-1, para. 2.7 shall apply.

8-580 Withdrawal of Certification

The requirements of ASME CA-1, para. 2.8 shall apply.

8-600 DESIGNATED OVERSIGHT

The requirements of ASME CA-1, Section 3 shall apply.

8-700 DATA REPORTS

The requirements of paras. 1-520 and 8-410(d) shall apply.

8-800 ASME RTP CERTIFIED MARK AND CERTIFIED DESIGNATOR

8-810 Marking Items With the ASME Certification Mark and the RTP Certification Designator

(a) The official ASME Certification Mark with RTP Designator (as shown in Figure 8-1) shall be applied to a vessel built according to all provisions of this Standard and ASME CA-1, para. 5.1.

(b) The Fabricator who completes a vessel, and has held throughout its design and fabrication a valid Certificate of Authorization, and having the acceptance of the Certified Individual [see para. 6-300(i)], may then apply the ASME Certification Mark with RTP Designator, which together with the Fabricator's Data Report shall certify all requirements of this Standard have been met. The ASME Certification Mark with RTP Designator shall be applied after the successful completion of all tests required by paras. 6-910 through 6-960.

(c) RTP subassemblies or components of a vessel for which Partial Data Reports are required in Part 6 shall be marked by the component Fabricator with the following:

(1) the official ASME Certification Mark with RTP Designator shown in Figure 8-1 above the word "COMPONENT"

(2) name of the Fabricator of the part of the vessel, and certificate number, preceded by the words "Certified By"

8-820 Authorization and Time of Marking

The requirements of ASME CA-1, para. 5.2 shall apply.

8-830 Control

The requirements of ASME CA-1, para. 5.3 shall apply.

8-840 RTP Requirements for Nameplate Construction and Attachment

(a) The method for identifying a vessel built to this Standard shall be a nameplate not less than 4 in. × 6 in. in size. The nameplate shall be permanently attached to the vessel or to a corrosion-resistant bracket permanently attached to the vessel as follows:

(1) Paper nameplates shall be laminated to the vessel surface or to an RTP bracket using resin-wetted layers of fiberglass surfacing veil.

(2) Cast, etched, embossed, engraved, or stamped nameplates shall be permanently attached to a metal or RTP bracket. Easily removable fasteners such as screws, bolts, and drive pins are not acceptable attachment methods.

(3) In the case of an insulated vessel, the bracket shall have a standoff height of at least 1 in. (25 mm) more than the insulation thickness.

(b) The nameplate shall be marked with all information as required by para. 8-850.

(c) After attachment to the vessel or bracket, all data shall be visible and legible.

(d) Nameplates shall be located in such a position as to be easily visible after a vessel is installed. Users should designate required nameplate location prior to the time that drawings are approved for fabrication. Locations near manways, which after vessel installation would be near ground level or just above an operating platform, are recommended.

(e) In addition to the nameplate, Fabricators may affix or attach any such proprietary or User logos, or data plates, as desired, with no limitation on design, method of attachment, data content, or location, provided the structural integrity of the vessel or its usefulness is not compromised.

8-850 Requirements for RTP Nameplate Information and Marking

(a) Each nameplate shall be marked with the following:

(1) the official ASME Certification Mark with RTP Designator shown in Figure 8-1

ASMENORMDOC.COM : Click to view the full PDF of ASME RTP-1 2019

(2) name of the Fabricator of the vessel and certificate number

(3) Fabricator's serial number for the vessel

(4) year stamped

(5) User's identification number (if specified in the UBRS)

(6) Manufacturer's Specific Product Identification for resin

(7) appropriate Visual Inspection Level (Level 1 or Level 2)

(8) for vessels defined as "Atmospheric" in the UBRS (see also para. 3-300), the words

(-a) "Design Pressure — Atmospheric"

(-b) "Maximum Temperature"

(9) for other vessels

(-a) "Maximum Allowable Working Pressure at Maximum Temperature"

(-b) "Maximum Allowable External Working Pressure at Maximum Temperature"

(10) design basis specific gravity of contents

(11) the designation "Critical Service" if applicable

Specified pressures shall be gage pressures given in units as specified in the UBRS. Temperatures shall be in units specified in the UBRS.

(b) If the vessel is optionally registered, the National Board Mark and Registration Number shall be stamped on the nameplate. The legend "National Board Registration Number" is optional.

(c) Letters and figures indicating specific vessel design data shall be at least $^{5}/_{16}$ in. (7.5 mm) high. Preprinted legend letters and figures shall be at least $^{1}/_{8}$ in. (3 mm) high.

8-860 Requirements for RTP Nameplate Design

(a) Paper Nameplates

(1) Paper shall be at least 0.004 in. (0.1 mm) thick and of high quality, white bond or linen base.

(2) All markings shall be black, highly visible and readable, on a white background.

(3) Markings, including the ASME Certification Mark with RTP Designator, shall be made in indelible ink of such nature as not to be water or resin soluble.

(b) Cast, Etched, Embossed, Engraved, or Stamped Nameplates

(1) Material shall be 300 series stainless steel or other suitable corrosion-resistant material.

(2) Thickness shall be sufficient to resist distortion due to the application of the marking, but in no case shall be less than 0.020 in. (0.5 mm)

(3) Markings including the RTP Designator may be produced by casting, etching, embossing, stamping, or engraving. The ASME Certification Mark shall be stamped. All stamps for applying the ASME Certification shall be obtained from ASME.

ASMENORMDOC.COM : Click to view the full PDF of ASME RTP-1 2019

MANDATORY APPENDIX M-1
REINFORCEMENT MATERIALS RECEIVING PROCEDURES

M1-100 INTRODUCTION

All inspections and tests specified in this Appendix are to be performed by Fabricator personnel or an independent testing laboratory.

ARTICLE A
FIBERGLASS SURFACING VEIL, ORGANIC FIBER SURFACING VEIL, CARBON FIBER VEIL, AND FIBERGLASS CHOPPED STRAND MAT

M1A-100 INTRODUCTION

This Article specifies the minimum inspections and tests that shall be performed on the rolls of fiberglass surfacing veil, organic fiber surfacing veil, and fiberglass chopped strand mat that shall be used to fabricate equipment to this Standard.

M1A-200 ACCEPTANCE INSPECTION

Acceptance inspection shall include inspection of all rolls for proper packaging and identification, and contamination. This acceptance inspection is to be conducted on the unopened roll. Acceptance requirements and limits are as defined in para. M1A-410. Acceptance inspection shall include inspection of selected rolls for measurement of unit weight per ASQ Z1.4 criteria. Inspection for manufacturing imperfections shall be conducted during use of rolled goods. Acceptance requirements and limits are as defined in paras. M1A-420 and M1A-430.

The form shown in Form M1A-1, or a similar form that contains the provisions to record the results of these required inspections and certifications, if applicable, shall be used by the Fabricator and shall be retained in the inspection records. A separate form shall be used for each mat manufacturer, mat nomenclature, mat treatment, and mat unit weight.

In lieu of performing the above manufacturing inspections, measurements, and documentation, the Fabricator shall provide the User or User's Agent with a Certificate of Compliance from the material manufacturer. This Certificate shall ensure that materials were manufactured, inspected, and tested per the material supplier's specifications.

M1A-300 EQUIPMENT AND MEASURING TOOLS REQUIRED

M1A-310 Inspection Table and Lights

An inspection table and adequate overhead lighting that are suitable for the inspection and testing of the mat are required. The equipment used must not introduce contamination to the mat during inspection and testing.

M1A-320 Linear Measuring Tools

A standard linear measuring tool (longer than the width of the rolls) that measures the roll widths with minimum accuracy of $\pm\frac{1}{8}$ in. (±3 mm) is required. A 12 in. $\pm\frac{1}{32}$ in. × 12 in. $\pm\frac{1}{32}$ in. (300 mm ± 0.80 mm × 300 mm ± 0.80 mm) template is required.

M1A-330 Laboratory Balance

A laboratory balance that measures to 0.1 g is required.

M1A-400 PROCEDURES AND ACCEPTANCE LIMITS

M1A-410 Roll Identification and Package Inspection

The mat shall be packaged as shipped from the mat manufacturer's factory. If repackaging is required, the Fabricator shall ensure that a material Certificate of Compliance traceable to the original material is provided. The original labels can be modified in regards to number and width of rolls only. All other documentation shall remain unchanged. Verify and enter in the inspection record that the mat rolls as identified by the mat manufacturer have the same nomenclature as the mat specified to produce the laminate by Subparts 2A and 2B, and examine the packaging of the mat for damage that renders the mat unusable. Indicate acceptable rolls by recording the date and name of the person performing the examination in Form M1A-1, column 4.

For packaged mats that are found to be acceptable for further inspection and tests, enter the reinforcement production date and lot number in Form M1A-1, columns 2 and 3.

ASMENORMDOC.COM : Click to view the full PDF of ASME RTP-1 2019

(19)

Form M1A-1 Veil and Mat Reinforcement Log Sheet

Fabricator's name _____

Address _____

_____

_____

QC file no. _____

Mat manufacturer _____

Mat nomenclature _____

Mat treatment (if given) [Note (1)] _____

Mat weight [Note (2)] _____

1	2	3	4		5	6	7		8	
Roll No.	Reinforcement Production Date (if Given)	Lot No. [Note (1)]	Packaging Inspection		Width	Weight of ft^2 (m^2) Sample	Property Inspection (Cols. 5 and 6)		Visual Inspection	
			By	Date			By	Date	By	Date
1										
2										
3										
4										
5										
6										
7										
8										

Comments on visual and packaging inspection (indicate which roll):

_____

_____

GENERAL NOTE: This form may be reproduced and used without written permission from ASME if used for purposes other than republication.

NOTES:

(1) Lot, batch, product code, or other label identification.

(2) Manufacturer's label weight.

ASMENORMDOC.COM : Click to view the full PDF of ASME RTP-1 2019

M1A-420 Visual Inspection of Mat

(a) As the mat is used during fabrication, it shall be visually inspected for imperfections and contamination. Date and name of person performing visual inspection shall be recorded in Form M1A-1, column 8.

(b) The mat shall be uniform in color, texture, and appearance. Imperfections and/or contaminants shall be removed so as not to damage the mat or by making two parallel cuts across the width of the mat and discarding the rectangular section of the mat containing the defects. Contaminants do not include white or light gray binder spots.

NOTE: Examples of imperfections are holes, cuts, thin spots, or delaminations, i.e., separating into layers during unrolling. Examples of contaminants are dirt, oil, grease, and foreign objects.

(c) Rolls having any of the following defects shall not be used in laminates made to this Standard:

(1) wet spots

(2) water contamination

(3) bar marks

(4) lengthwise wrinkles exceeding 5 ft (1.5 m) in length

(19) ### M1A-430 Unit Weight of Mat

From the leading edge of each roll of mat that will be tested as per para. M1A-200, cut a 1-ft^2 (0.01 m^2)[10-ft^2 (0.1 m^2) for surfacing veil] sample using the template specified in para. M1A-320. If the roll is less than 12 in. (300 mm) wide, use the full width of the roll, but adjust the length of the sample (use the linear measuring tool specified in para. M1A-320). Any property measurement shall be conducted by unrolling only the quantity of material required to conduct the test. Using the laboratory balance required by para. M1A-330, weigh the sample of mat to the nearest 0.1 g. Convert the grams to ounces, if needed, by multiplying grams by 0.0352. If the sample from a roll falls outside the mat manufacturer's specified weight range, the roll of mat shall be rejected. Enter the values of weighed samples for acceptable and unacceptable rolls in the inspection form in Form M1A-1, column 6. Note the rejected rolls with the word "rejected" next to the recorded weight in column 6.

ARTICLE B
FIBERGLASS SPRAY-UP ROVING AND FILAMENT WINDING ROVING

M1B-100 INTRODUCTION

This Article specifies the minimum inspections and tests that are to be performed on fiberglass spray-up roving and filament winding roving that are to be used to fabricate equipment to this Standard.

M1B-200 ACCEPTANCE INSPECTIONS

Acceptance inspections shall include inspection of the roving balls for proper packaging, identification, and contamination. This acceptance inspection is to be conducted on the unopened roll. Acceptance requirements and limits are as defined in para. M1B-410. Acceptance inspection shall include inspection of selected rolls for measurement of roving yield per ASQ Z1.4 criteria. Inspection for manufacturing imperfections shall be conducted during use of roving balls. Acceptance requirements and limits are as defined in paras. M1B-420 and M1B-430.

The form shown in Form M1B-1, or a similar form that contains the provisions to record the results of inspections, shall be used by the Fabricator and shall be retained in the inspection records. A separate form shall be used for each roving manufacturer, roving nomenclature, and roving yield.

In lieu of performing the above inspections, measurements, and documentation, the Fabricator shall provide the User or User's Agent with a Certificate of Compliance from the material manufacturer. This Certificate shall ensure that materials were manufactured, inspected, and tested per the material supplier's specifications.

M1B-300 EQUIPMENT AND MEASURING TOOLS

M1B-310 Wrap Reel

A device may be used that provides a minimum of a 6 yd (5.5 m) sample measured and cut under sufficient tension to keep the strand taut. Equipment such as standard 36-in. or 54-in. (900 mm or 1 350 mm) yarn reel with adjustable transverse, four skein capacity is suggested.

M1B-320 Laboratory Balance

A laboratory balance that measures to 0.1 g is required.

M1B-400 PROCEDURES AND ACCEPTANCE LIMITS

M1B-410 Roving Identification and Package Inspection

The roving shall be packaged as shipped from the manufacturer's factory. The roving shall not be repackaged in the distribution of the material after the manufacturer has shipped the roving. Verify that the roving balls as identified by the manufacturer have the same nomenclature as the roving required by Part 2 and examine the packaging of the roving for damage that renders the roving unusable. Indicate acceptable roving by recording in Form M1B-1, column 4, the date and name of the person performing the examination.

For packaged rovings that are found to be acceptable for further inspection and tests, enter the reinforcement production date and lot number for each ball in Form M1B-1, columns 2 and 3.

ASMENORMDOC.COM : Click to view the full PDF of ASME RTP-1 2019

(19)

Form M1B-1 Roving Reinforcement Log Sheet

Fabricator's name _____

Address _____

_____

_____

Roving manufacturer _____

Roving nomenclature _____

Roving yield _____

QC file no. _____

1	2	3	4		5	6		7	
Ball No.	Reinforcement Production Date (if Given)	Lot No. [Note (1)]	Packaging Inspection		Yield	Property Inspection (Column 5)		Visual Inspection	
			By	Date		By	Date	By	Date
1									
2									
3									
4									
5									
6									
7									
8									

Comments on visual and packaging inspection (indicate which roll):

_____

_____

GENERAL NOTE: This form may be reproduced and used without written permission from ASME if used for purposes other than republication.

NOTE:

(1) Lot, batch, product code, or other label identification.

ASMENORMDOC.COM : Click to view the full PDF of ASME RTP-1 2019

M1B-420 Visual Inspection of Roving

(a) The roving ball shall be visually inspected for imperfections and contamination prior to use by the Fabricator. Record the date and the inspector's name in Form M1B-1, column 7. If any roving ball is rejected, record the reason in the comments section in Form M1B-1.

(b) Roving balls having any of the following defects shall not be used for laminates made to this Standard:

(1) any package that exhibits foreign matter such as dirt, oil, grease, waste glass fiber, or beads of glass such that it would detract from the performance or appearance of the finished product

(2) balls that have been contaminated by water

M1B-430 Measurement of Roving Yield

From one roving ball per shipment, obtain a minimum of a 6 yd (5.5 m) sample (length *A*) of roving as required by para. M1B-310. Roving shall be pulled from the same side of the package as used in the Fabricator's process. If the roving is pulled from the outside of the package, sufficient material shall be removed and discarded so that the sample will be taken from undisturbed material. Remove the sample from the wrap reel. Double the sample several times and tie with a single knot. Using the balance required by para. M1B-320, weigh the sample to the nearest 0.1 g. Convert grams to ounces by multiplying grams by 0.0352. Two specimens from each package shall be measured and the average computed. Record as weight *A*.

Calculate the yield, yd/lb, using the following formula:

$$\text{yield, yd/lb} = \frac{16\ \text{oz/lb} \times \text{length}\ A}{\text{weight}\ A,\ \text{oz}} = \frac{96}{\text{weight}\ A,\ \text{oz}}$$

Calculate the yield, km/g, using the following formula:

$$\text{yield, km/g} = \frac{\text{length}\ A,\ \text{m}}{1000\ \text{m/km} \times \text{wt}\ A,\ \text{g}}$$

Calculate the TEX, g/km, using the following formula:

$$\text{TEX, g/km} = \frac{1000\ \text{m/km} \times \text{weight}\ A,\ \text{g}}{\text{length}\ A,\ \text{m}}$$

Enter the yield of acceptable and unacceptable balls of roving in Form M1B-1, column 5. If the yield of the ball of roving is outside the manufacturer's specification, the remaining balls in the shipment are to be inspected per ASQ Z1.4 criteria, following the procedure specified in this paragraph. Balls whose yield is outside the manufacturer's specification shall not be used for laminates made to this Standard. Note the rejected roving balls with the word "rejected" next to the yield in column 5. Also, record the date and name of the person performing the yield measurement in column 6.

ARTICLE C
FIBERGLASS WOVEN ROVING FABRIC, FIBERGLASS UNIDIRECTIONAL FABRIC, AND FIBERGLASS NONWOVEN BIAXIAL FABRIC

M1C-100 INTRODUCTION

This Article specifies the minimum inspections and tests that are to be performed on the rolls of fiberglass woven roving fabric, fiberglass unidirectional fabric, and fiberglass nonwoven biaxial fabric that are to be used to fabricate equipment to this Standard.

M1C-200 ACCEPTANCE INSPECTIONS

Acceptance inspections shall include inspection of all fabric rolls for proper packaging and identification, and contamination. This acceptance inspection is to be conducted on the unopened roll. Acceptance requirements and limits are as defined in para. M1C-410. Acceptance inspection shall include inspection of selected rolls for measurement of unit weight and verification of construction of fabric per ASQ Z1.4 criteria. Inspection for manufacturing imperfections shall be conducted during use of rolled goods. Acceptance requirements and limits are as defined in paras. M1C-420 through M1C-450.

The form shown in Form M1C-1, or a similar form that contains the provisions to record the results of these required inspections, shall be used by the Fabricator and shall be retained in the inspection records. A separate form shall be used for each fabric manufacturer, fabric nomenclature, fabric unit weight [oz/yd^2 (g/m^2)], and fabric construction.

In lieu of performing the above inspections, measurements, and documentation, the Fabricator shall provide the User or User's Agent with a Certificate of Compliance from the material manufacturer. This Certificate shall ensure that materials were manufactured, inspected, and tested per the material supplier's specifications.

M1C-300 EQUIPMENT AND MEASURING TOOLS REQUIRED

M1C-310 Inspection Table and Lights

An inspection table and adequate overhead lighting that are suitable for the inspection and testing of the fabric are required. The equipment used shall not introduce contamination to the fabric during inspection and testing.

M1C-320 Linear Measuring, Marking, and Cutting Tools

(a) A standard linear measuring tool (longer than width of roll) that measures the roll widths with minimum accuracy of ±$^1/_8$ in. (±3 mm) is required.

ASMENORMDOC.COM : Click to view the full PDF of ASME RTP-1 2019

(19)

Form M1C-1 Fabric Reinforcement Log Sheet

Fabricator's name _____

Address _____

_____

_____

QC file no. _____

Fabric manufacturer _____

Fabric nomenclature _____

Fabric weight _____

Fabric construction _____

1	2	3	4		5	6	7	8		9	
Roll No.	Reinforcement Production Date (if Given)	Lot No. [Note (1)]	Packaging Inspection		Width	Weight	Construction	Property Inspection (Cols. 5, 6, and 7)		Visual Inspection	
			By	Date				By	Date	By	Date
1											
2											
3											
4											
5											
6											
7											
8											

Comments on visual and packaging inspection (indicate which roll):

_____

_____

GENERAL NOTE: This form may be reproduced and used without written permission from ASME if used for purposes other than republication.

NOTE:

(1) Lot, batch, product code, or other label identification.

ASMENORMDOC.COM : Click to view the full PDF of ASME RTP-1 2019

(b) A 3 in. ±$^{1}/_{32}$ in. (76 mm ± 0.80 mm) square template is required.

(c) A fine-point felt-tip pen and scissors are required.

M1C-330 Laboratory Balance

A laboratory balance that measures to 0.1 g is required.

M1C-400 PROCEDURES AND ACCEPTANCE LIMITS

M1C-410 Roll Identification and Package Inspection

The fabric shall be packaged as shipped from the manufacturer's factory. The fabric shall not be repackaged in the distribution of the material after the manufacturer has shipped the fabric. Verify that the fabric rolls as identified by the manufacturer have the same nomenclature as the fabric required by Part 2, and examine the packaging of the fabric for damage that renders the fabric unusable. Indicate acceptable rolls by recording the date and name of the person performing the examination in Form M1C-1, column 4.

For packaged rolls that are found to be acceptable for further inspection and tests, enter the fabric production date and lot number in Form M1C-1, columns 2 and 3.

M1C-420 Visual Inspection of Fabric

(a) As fabric is used, it shall be visually inspected for imperfections and contaminations by the Fabricator. Record date and name of inspector in Form M1C-1, column 9. If a roll is rejected, record the reason under the comments section in Form M1C-1.

(b) Fabric shall be uniform in color, texture, and appearance. The following imperfections and/or contaminations shall be removed from fiberglass woven roving and fiberglass nonwoven biaxial fabric by making two parallel cuts across the width of the fabric and discarding the rectangular sections of fabric containing the following defects:

(1) dirt spots [$^{3}/_{16}$ in. to $^{3}/_{4}$ in. (4.5 mm to 19 mm) in diameter] in excess of one per 10 lineal feet (3 lineal meters) (*dirt spots* are defined as all foreign matter, dirt, grease spots, etc.)

(2) missing ends for more than 2 consecutive feet (600 consecutive millimeters) in length

(3) fuzz clumps or loops greater than 1 in. (25 mm) in height from the surface

(c) Fiberglass woven and fiberglass nonwoven biaxial fabric having any of the following defects shall not be used for laminates made to this Standard:

(1) dirt spots in excess of $^{3}/_{4}$ in. (19 mm) in diameter (*dirt spots* are defined as all foreign matter, dirt, grease spots, etc.)

(2) more than 11 missing ends, either individual picks or any combination of individual and multiple (2, 3, 4, or 5) ends in any consecutive 100 lineal feet (30.5 lineal meters)

(3) fuzz clumps or loops that prevent the proper laydown of the fabric and that cannot be easily removed

(4) rolls that have been contaminated by water

(d) Fiberglass unidirectional fabric shall be uniform in color, texture, and appearance. The following imperfections and/or contaminations shall be removed from the fabric by making two parallel cuts across the width of the fabric and discarding the rectangular sections of fabric containing the following defects:

(1) dirt spots [$^{3}/_{16}$ in. to $^{3}/_{4}$ in. (4.5 mm to 19 mm) in diameter] in excess of one per 10 lineal feet (3 lineal meters) (*dirt spots* are defined as all foreign matter, dirt, grease spots, etc.).

(2) missing ends in any direction less than one per lineal foot (per 300 lineal millimeters).

(3) areas of the fabric less than 6 in. × 6 in. (150 mm × 150 mm) where rovings are disoriented or looped less than 1 in. (25 mm) in height from the surface. The number of these areas shall not exceed two per 5 lineal yards (per 4.6 lineal meters) of fabric. If so, the roll shall not be used for laminates made to this Standard.

(4) weft tails exceeding 1 in. (25 mm) or less than $^{1}/_{8}$ in. (3 mm) in length.

(5) bias exceeding ±10 deg from 0 deg/180 deg in a warp (machine direction) product or from 90 deg/270 deg in a weft (fill direction) product.

(e) Fiberglass unidirectional fabric rolls having any of the following defects shall not be used for laminates made to this Standard:

(1) dirt spots in excess of $^{3}/_{4}$ in. (19 mm) in diameter (*dirt spots* are defined as all foreign matter, dirt, grease spots, etc.)

(2) missing ends in any direction more than one per lineal foot of fabric

(3) areas of the fabric greater than 6 in. × 6 in. (150 mm × 150 mm) where rovings are disoriented or looped less than 1 in. in height from the surface

(4) areas of the fabric where rovings are disoriented or looped greater than 1 in. (25 mm) in height from the surface

(5) rolls that have been contaminated by water or other substances

M1C-430 Width Measure of Fabric

With the linear measuring tool given in para. M1C-320, measure the width of the fabric at least 1 yd (1 m) from the beginning (leading) edge of the roll and at two additional positions at least 6 in. (150 mm) apart. Follow the manufacturer's definition for the width of the particular fabric (see note below). Measure to the nearest $^{1}/_{8}$ in. (3 mm). Average the three measurements and enter the measured width of acceptable and unacceptable rolls in the

ASMENORMDOC.COM : Click to view the full PDF of ASME RTP-1 2019

inspection form shown in Form M1C-1. Note the rejected rolls with the word "rejected" next to the width in column 5. Rolls with variations greater than ±½ in. (±13 mm) shall not be used in laminates made to this Standard.

Record the date and name of the person performing the width, weight, and construction measurements in column 8.

NOTE: Due to the methods of manufacturing fabrics, there are different ways of describing widths of fabrics.

M1C-440 Unit Weight of Fabric

Unroll the fabric on the inspection table and lay flat. Pull one fill pick from the sample or mark a line across the width of the fabric. Measure from the pulled pick or line using a 36-in. (915 mm) rule meeting the accuracy requirements of para. M1C-320. Pull another fill pick or mark off the 36-in. (915 mm) sample for cutting. Cut the 36-in. (915-mm) long sample across the width of the fabric using scissors. Measure the width of the fabric according to para. M1C-430. Weigh the sample to the nearest 0.1 g. Convert grams to ounces by multiplying grams by 0.0352. Calculate the unit weight in ounces per square yard using the following formula:

$$\frac{\text{weight, oz}}{\text{yd}^2} = \frac{\text{36 in.}}{\text{square yard}} \times \frac{\text{sample weight, oz}}{\text{sample width, in.}}$$

Calculate the weight in grams per square meter using the following formula:

$$\frac{\text{weight, g}}{\text{m}^2} = \frac{\text{sample weight, g}}{\text{0.915 m} \times \text{sample width, m}}$$

Rolls whose weight per square yard (meter) are outside the manufacturer's specification shall not be used for laminates made to this Standard. Enter the weight per square yard (meter) of acceptable and unacceptable rolls in the inspection report shown in Form M1C-1. Note the rejected rolls with the word "rejected" next to the weight in column 6.

M1C-450 Construction

Unroll the fabric on the inspection table and lay flat. Perform the verification of construction in an area at least 1 yd (1 m) from the beginning of the roll and one-tenth of the width from the edge of the fabric. For example, on 60 in. (1 500 mm) material start at least 6 in. (150 mm) from one edge and 1 yd (1 m) from the beginning of the fabric. Using the template required by para. M1C-320, measure a 3-in. (76 mm) square and count the number of warp strands (if applicable) to the nearest half strand in the section. Repeat this three times diagonally across the fabric. Add the total warp strands counted in the three 3-in. (76 mm) squares and divide by nine. This will give picks per inch (per 25 millimeters) in the warp of the fabric. Repeat for the fill (weft) strands if applicable. Rolls whose picks per inch (per 25 millimeters) in either warp or fill are outside the manufacturer's specification shall not be used for laminates made to this Standard. Enter the picks per inch (per 25 millimeters) in the warp and fill of acceptable and unacceptable rolls to the nearest 0.1 picks in Form M1C-1, column 7.

ARTICLE D
FIBERGLASS MILLED FIBERS

M1D-100 INTRODUCTION

This Article specifies the minimum inspections and tests that are to be performed on the packages of fiberglass milled fiber that are to be used to fabricate equipment to this Standard.

M1D-200 ACCEPTANCE INSPECTIONS (19)

Acceptance inspections shall include inspection of the milled fiber for proper packaging and identification, and visual inspection for contamination. Acceptance requirements and limits are defined in paras. M1D-410 and M1D-420(a).

The form shown in Form M1D-1, or a similar form that contains the provisions to record the results of these required inspections, shall be used by the Fabricator and shall be retained in the inspection records. A separate form shall be used for each milled fiber manufacturer, milled fiber nomenclature, and milled fiber length.

In lieu of performing the above inspections, measurements, and documentation, the Fabricator shall provide the User or User's Agent with a Certificate of Compliance from the material manufacturer. This Certificate shall ensure that materials were manufactured, inspected, and tested per the material supplier's specifications.

M1D-300 EQUIPMENT REQUIRED

An inspection table and adequate overhead lighting that are suitable for the inspection of the milled fiber are required. The equipment used must not introduce contamination to the milled fiber during inspection.

M1D-400 PROCEDURES AND ACCEPTANCE LIMITS

M1D-410 Package Identification and Inspection

The milled fiber shall be packaged as shipped from the manufacturer's factory. The milled fiber shall not be repackaged in the distribution of the material after the manufacturer has shipped the milled fiber. Verify that the milled fiber as identified by the manufacturer has the same nomenclature as the milled fiber required by Part 2, and examine each package of milled fiber for damage that renders it unusable. Indicate acceptable

ASMENORMDOC.COM : Click to view the full PDF of ASME RTP-1 2019

milled fibers by recording date and name of the person performing the examination in Form M1D-1, column 4.

For packaged milled fiber that is found to be acceptable for further inspection, enter the reinforcement production date and lot number for each package of milled fibers used in Form M1D-1, columns 2 and 3.

M1D-420 Visual Inspection of Milled Fiber

(a) As milled fiber is used, it shall be visually inspected for contamination by the Fabricator. Record the date and the inspector's name in Form M1D-1, column 5.

(b) Packages having contamination of the milled fiber evident in the form of water, oil, grease, or clumping together shall be rejected.

(c) Record the results of the visual inspection of each package of milled fiber in the inspection report.

ASMENORMDOC.COM : Click to view the full PDF of ASME RTP-1 2019

(19)

Form M1D-1 Milled Fiber Reinforcement Log Sheet

Fabricator's name _____

Address _____

_____

_____

Fiber manufacturer _____

Fiber nomenclature _____

Fiber length _____

QC file no. _____

1	2	3	4		5	
Package No.	Reinforcement Production Date (if Given)	Lot No. [Note (1)]	Packaging Inspection		Visual Inspection	
			By	Date	By	Date
1						
2						
3						
4						
5						
6						
7						
8						

Comments on visual and packaging inspection (indicate which package):

_____

_____

GENERAL NOTE: This form may be reproduced and used without written permission from ASME if used for purposes other than republication.
NOTE:
(1) Lot, batch, product code, or other label identification.

ASMENORMDOC.COM : Click to view the full PDF of ASME RTP-1 2019

MANDATORY APPENDIX M-2
MATRIX MATERIALS RECEIVING PROCEDURES

M2-100 INTRODUCTION

This Appendix's Articles A (Visual Inspection Requirements), B (Specific Gravity), C (Viscosity, Brookfield Method), and D (Room Temperature Gel Time) specify the minimum requirements for the inspections and tests that shall be performed by the Fabricator or an independent testing laboratory on resins and curing agents (curing agents include accelerators, promoters, and peroxides as required for specific resins systems).

The Fabricator may use a Certificate of Analysis prepared by the manufacturer as a means of satisfying the requirements of Mandatory Appendix M-2, M2-100 and Articles A through D in lieu of inspections and tests being performed by the Fabricator or an independent testing laboratory on resins and curing agents, under the following conditions:

(a) The product is accompanied by a manufacturer's prepared Certificate of Analysis, which states the test methods and procedures were followed to obtain the results.

(b) The Fabricator accepts the Certificate of Analysis.

(c) The Fabricator determines the products are the ones that were ordered and they meet the labeling requirements of Mandatory Appendix M-2, Article A with the following exceptions:

(1) M2A-200(a)(3): the appearance (color, clarity, absence of solids, gels, and dirt) may be determined by the manufacturer.

(2) M2A-200(a)(4): specific gravity, viscosity, and room temperature gel time may be determined by test methods established and performed by the manufacturer.

(3) M2A-200(a)(5): results of specific tests need not be recorded on the Resin Log Sheet (Form M2E-1), provided the Certificate of Analysis is noted in the Log Sheet by a traceable identification and is available for review by concerned parties.

(4) M2A-200(b)(6): testing of proper curing activity need not be performed on curing agents by the Fabricator nor recorded on the Curing Agents Log Sheet (Form M2E-2), provided the Certificate of Analysis is noted in the Log Sheet by traceable identification and is available for review by concerned parties.

If a Certificate of Analysis is not acceptable to the Fabricator, then these inspections shall be performed on at least one random sample from each lot or batch of material received from a supplier. If any containers or packages are damaged, then the contents of each damaged container shall be inspected according to the procedures of this section. The requirements of this Appendix shall be completed prior to use of resins and curing agents for fabrication of equipment to this Standard.

M2-200 SAFETY (19)

See Safety Data Sheets (SDS) for materials to be used.

ARTICLE A
VISUAL INSPECTION REQUIREMENTS

M2A-100 INTRODUCTION

This Article specifies the steps that shall be followed when inspecting resins and curing agents that are to be used to fabricate vessels to this Standard.

M2A-200 REQUIREMENTS

(a) Resins, before use, shall comply with the following:

(1) They shall be checked to ensure they are the products ordered.

(2) They shall have proper labeling for the specified product, including the manufacturer's product name and identifying number.

(3) A sample shall be of normal color and clarity for the specific resin, free from solid or gelled particles and dirt as determined by visual examination.

(4) They shall be within the manufacturer's specification limits for specific gravity, viscosity, and room temperature gel time as determined by the test methods of Articles B through D, unless the Fabricator has developed and implemented written test method procedures documented in their Quality Control program that develops the data required to be documented on the Resin Log Sheet.

(5) Results of visual examinations and specific tests shall be recorded on the Resin Log Sheet, Form M2E-1.

(b) Curing agents, before use, shall comply with the following:

(1) They shall be checked to ensure they are the products ordered.

(2) They shall have proper labeling for the specified product, including the manufacturer's product name and identifying number.

ASMENORMDOC.COM : Click to view the full PDF of ASME RTP-1 2019

(3) They shall have no layering or separation into two or more phases.

CAUTION: Layering or separation presents potential hazard; contact supplier immediately at emergency telephone numbers shown on the Curing Agents Log Sheet for instructions if layering is observed.

(4) In the case of liquids, they shall be free of sediment or suspended solids.

(5) They shall have proper curing activity as defined by the Fabricator's process and/or manufacturer's specification, as determined by the room temperature gel time test (see Article D).

(6) Results of visual examination and gel time testing shall be recorded on the Curing Agents Log Sheet, Form M2E-2.

M2A-300 ACCEPTANCE CRITERIA

Materials failing visual inspection criteria or failing to meet the manufacturer's specifications in any prescribed test shall not be used unless

(a) in consultation with the manufacturer's QC contact (shown on log sheet), corrective sampling procedures are undertaken that result in the material passing visual examination

(b) test result differences are shown, by retest, to be caused by procedural differences in testing rather than by differences in quality of materials

ARTICLE B
SPECIFIC GRAVITY

M2B-100 INTRODUCTION

This Article specifies the procedure that shall be used to determine the specific gravity. This is accomplished by weighing a standard volume of liquid at a specific temperature and converting this weight to specific gravity.

M2B-200 APPARATUS

The following apparatus is required:

(a) laboratory balance (0.1 g sensitivity)

(b) weight per gallon cup (water capacity 83.3 ml) with lid (Gardner catalog No. CG 9652 or equivalent)

(c) thermometer (ASTM No. 17C)

M2B-300 PROCEDURE

(a) Precondition the resin sample and weight per gallon cup for 20 min at 77°F ± 0.2°F (25°C ± 0.1°C). Insert the cup and the resin sample separately in a large beaker. Place in a 77°F (25°C) water bath.

(b) Tare weigh the empty cup and lid to ±0.1 g.

(c) Fill the cup to the brim with bubble-free resin.

(d) Place the cover on the cup and force it down to seat fully.

(e) Wipe the cup clean on the outside.

(f) Weigh the filled cup to ±0.1 g.

M2B-400 CALCULATIONS

(U.S. Customary Units)

$$\text{density, lb/gal} = \frac{\text{weight of full cup, g} - \text{tare weight, g}}{10}$$

$$\text{specific gravity} = \frac{\text{density, lb/gal}}{8.33}$$

(SI Units)

$$\text{density, g/mL} = \frac{\text{weight of full cup, g} - \text{tare weight, g}}{83.3\ \text{mL}}$$

$$\text{specific gravity} = \frac{\text{density, g/mL}}{0.9982\ \text{g/mL}}$$

M2B-500 REPORT

Record specific gravity on the Resin Log Sheet, Form M2E-1.

ARTICLE C
VISCOSITY, BROOKFIELD METHOD

M2C-100 INTRODUCTION

The Brookfield method determines the viscosity and thixotropic index of a resin using a Brookfield viscometer. It is applicable for both thixotropic and nonthixotropic resins. However, close control of resin temperature and careful maintenance of the Brookfield viscometer are required to obtain accurate viscosity values.

M2C-200 APPARATUS

The following apparatus is required:

(a) viscometer suitable for measuring Brookfield viscosity (calibrated via manufacturer's directions)

(b) 250 ml polypropylene beakers

(c) constant temperature water bath at 77°F ± 1°F (25°C ± 0.5°C)

(d) thermometer (ASTM No. 17C)

(e) stirring rod or spatula that will not absorb resin or additives

(f) timer, reading in 0.1 min

M2C-300 PROCEDURE FOR TEMPERATURE ADJUSTMENT

(a) Fill beaker with material to be tested.

(b) Immerse covered beaker in agitated 77°F (25°C) water bath and allow to come to temperature, 77°F ± 1°F (25°C ± 0.5°C). The temperature adjustment may

ASMENORMDOC.COM : Click to view the full PDF of ASME RTP-1 2019

be hastened by spatula agitation of the sample (avoid air entrapment).

(c) Check temperature using ASTM No. 176 thermometer.

M2C-400 PROCEDURE FOR THIXOTROPIC RESINS

(a) Vigorously agitate the resin with a spatula until it is thoroughly mixed minimizing entrapment of air, replace cover on beaker, and return to water bath for a minimum of 5 min or until all visible entrapped air is gone.

(b) Level Brookfield viscometer, and attach spindle and guard as designated by resin manufacturer.

(c) Remove beaker from bath, place open beaker in position under Brookfield viscometer, and center and immerse spindle to middle of the notch.

(d) Set speed to 6 RPM, and start Brookfield viscometer and timer. After 1 min, increase speed to 60 RPM. At 2 min on timer, stop viscometer, and read. Reduce speed to 6 RPM, and take final reading 1 min after restarting. Record the 60 RPM and 6 RPM values.

(e) Repeat steps (a) through (d) above for second reading at each spindle speed.

M2C-500 PROCEDURE FOR NONTHIXOTROPIC RESINS

(a) Level Brookfield viscometer, and attach spindle and guard as designated by resin manufacturer.

(b) Remove beaker from bath, place open beaker in position under Brookfield viscometer, and center and immerse spindle to middle of the notch.

(c) Run viscosity at 60 RPM for 1 min with a spindle chosen so that the Brookfield pointer falls approximately in the midrange of the recording dial. Alternatively, run at RPM and spindle recommended by resin manufacturer. Record the value.

(d) Repeat steps (a) through (c) above for second result.

M2C-600 CALCULATIONS

(a) Determine viscosity by multiplying the values obtained in paras. M2C-400 and M2C-500 with the Brookfield constant for the particular spindle number and RPM used to obtain the value.

(b) If the two results for a particular spindle and speed do not agree within ±50 centipoise, repeat the test.

(c) Determine thixotropic index as viscosity at 6 RPM divided by viscosity at 60 RPM.

M2C-700 REPORT

Report the following on the Resin Log Sheet, Form M2E-1:

(a) Brookfield viscometer spindle and speed

(b) viscosity in centipoise at 77°F (25°C) average of two trials at both 6 RPM and 60 RPM

ARTICLE D
ROOM TEMPERATURE GEL TIME

M2D-100 INTRODUCTION

This Article specifies the procedure that shall be used to determine the room temperature 77°F (25°C) gel time of resins that have been properly mixed with correctly proportioned amounts of accelerator, promoter, and peroxide curing agents.

M2D-200 APPARATUS

The following apparatus is required:

(a) constant temperature water bath at 77°F ± 1°F (25°C ± 0.5°C)

(b) polypropylene graduated beaker, 8.45 oz (250 ml), minimum

(c) stirring rods or spatulas that will not absorb resin or additives

(d) laboratory timer, calibrated in units of 0.1 min

(e) laboratory balance (0.1 g) sensitivity

(f) graduated syringes, delivery 0.003 oz to 0.1 oz (0.1 ml to 3.0 ml)

(g) thermometer (ASTM No. 17C)

M2D-300 PROCEDURE

(a) Place 100 g of resin to be tested into a clean 250 ml polypropylene beaker. Place charged beaker in the constant temperature bath previously set at 77°F ± 2°F (25°C ± 0.5°C) for a minimum of 20 min until the resin in the beaker is stabilized throughout at 77°F ± 2°F (25°C ± 1°C).

(b) Add controlled promoters and/or accelerators individually, stirring with the metal spatula between each addition until they are thoroughly dispersed (1 min for each addition). The quantities and precision of amounts are to be as specified by the resin supplier.

NOTE: It is recommended that wooden tongue depressors not be used, since they will absorb curing components and may also leach undesirable contaminants into the resin solution.

(c) After addition of the promoters and accelerators, allow the resin to rest in the control temperature bath. When enough of the entrapped air from stirring has left the sample to allow visual examination, check the sample for good dispersion, particularly of cobalt additives. Any signs of striations or strings of the cobalt will require remixing.

ASMENORMDOC.COM : Click to view the full PDF of ASME RTP-1 2019

(d) Add the required concentration of the peroxide catalyst and mix vigorously with a clean metal spatula for 1 min. Start the timer simultaneously with the start of mixing.

WARNING: Peroxides will react violently if placed in direct contact with metallic promoters or organic accelerators. Extreme care must be taken to avoid this. Refer carefully to peroxide manufacturer's instructions for safe handling of these materials.

(e) Return the polypropylene beaker with the remaining resin to the constant temperature bath. Periodically probe the resin solution with the spatula until such time that the resin turns very thick and will "snap" or break evenly when the probe is lifted from the resin. When the snap occurs, stop the timer and record the time lapse as "gel time."

M2D-400 REPORT

Record the room temperature 77°F(25°C) gel time on the Resin Log Sheet, Form M2E-1.

ARTICLE E
RESIN AND CURING AGENTS LOG SHEETS

See Forms M2E-1 and M2E-2 for the Resin and Curing Agents Log Sheets.

ARTICLE F
COMMON ADDITIVES

M2F-100 INTRODUCTION

This Article specifies the minimum inspections by the Fabricator that must be performed prior to the acceptance and use of any of the common additives in the resin.

M2F-200 DEFINITION AND LIMITS

M2F-210 Thixotropic Agents

Thixotropic agents are flame-processed silicon dioxides that are used to adjust the resin flow characteristics. The laminating resin shall contain *not* more than 1.5 parts per 100 parts resin by weight.

M2F-220 Flame Retardant Synergists

Flame retardant synergists are antimony oxides that are added to halogenated resins to enhance their measured flame retardant characteristics when measured per ASTM E84. The laminating resin shall not contain more than 5 parts antimony oxide per 100 parts resin by weight. When predispersed concentrates are used, the laminating resin shall contain not more than 5 parts active antimony oxide by weight. No more than 10 parts of the predispersed concentrate per 100 parts resin by weight is permissible.

M2F-230 Ultraviolet Light Absorbers

Ultraviolet light absorbers are organic compounds that, by converting photochemical energy to thermal energy, effectively stabilize resin binders against the deteriorating effects of ultraviolet light. Only the outer surface resin-rich layer may contain the ultraviolet light absorber.

M2F-240 Pigments

Pigments are compounds that provide coloration and/or opacity. Only the outer surface resin-rich layer may contain pigment.

M2F-300 ACCEPTANCE INSPECTION

(a) The package for each of the common additives shall be inspected at the time of delivery. Acceptance requirements are defined in para. M2F-400.

(b) The form shown in Form M2F-1, or a similar form that contains the provisions to record the results of these required inspections, shall be used by the Fabricator and shall be retained in the inspection records.

M2F-400 ACCEPTANCE CRITERIA

(a) The primary package shall be clearly labeled by the additive manufacturer to identify the contained product by manufacturer, name, and lot number.

The primary container shall be free from damage (breakage, tear, or puncture). There shall be no visible sign that any part of the primary container wall has at any time been saturated with a liquid such as water.

(b) For additives found to be acceptable, the Fabricator must list the manufacturer's name, product name, product lot number, and purpose of additive on the inspection form. In the space next to "As Received," the inspector will sign his/her name and record the date.

M2F-500 INSPECTION IN USE

At the time of use, additives shall be visually inspected for contamination. Solid contaminants may be removed and discarded. Any portion of a product that has been agglomerated by exposure to a liquid contaminant must be removed and discarded before the remainder can be added to a resin.

When contamination is found, the Fabricator must enter the date, describe the condition, and initial the entry on the original Common Additives Log Sheet (see Form M2F-1).

ASMENORMDOC.COM : Click to view the full PDF of ASME RTP-1 2019

(19)

Form M2E-1 Resin Log Sheet

Manufacturer _____ QC Contact _____

Resin _____ Address _____

Spindle no. _____ Telephone no. _____

Emergency telephone no. _____

Date	Lot No.	Gel Time @ 77°F (25°C) (Minutes)	Viscosity @ 77°F (25°C) (cps)		Specific Gravity @ 77°F (25°C)	Visual Examination
			@ 60 rpm	@ 6 rpm		
Manufacturer's Specification:						

GENERAL NOTE: This form may be reproduced and used without written permission from ASME if used for purposes other than republication.

ASMENORMDOC.COM : Click to view the full PDF of ASME RTP-1 2019

(19)

Form M2E-2 Curing Agents Log Sheet

Manufacturer _____

Curing agent _____

Standard resin _____

QC contact _____

Address _____

Telephone no. _____

Emergency telephone no. _____

Date	Lot No.	Gel Time @ 77°F (25°C) (Minutes)	Visual Examination

GENERAL NOTE: This form may be reproduced and used without written permission from ASME if used for purposes other than republication.

ASMENORMDOC.COM : Click to view the full PDF of ASME RTP-1 2019

(19)

Form M2F-1 Common Additives Log Sheet

	Raw Materials Inspection	Inspector	Date
Manufacturer	As Received		
	In Use Quality Problems		
Product Name			
Lot Number			
Additive Purpose			
Manufacturer	As Received		
	In Use Quality Problems		
Product Name			
Lot Number			
Additive Purpose			
Manufacturer	As Received		
	In Use Quality Problems		
Product Name			
Lot Number			
Additive Purpose			
Manufacturer	As Received		
	In Use Quality Problems		
Product Name			
Lot Number			
Additive Purpose			

GENERAL NOTE: This form may be reproduced and used without written permission from ASME if used for purposes other than republication.

ASMENORMDOC.COM : Click to view the full PDF of ASME RTP-1 2019

MANDATORY APPENDIX M-3
CALCULATIONS USING THE CLASSICAL LAMINATION THEORY (CLT) ANALYSIS METHOD

ASMENORMDOC.COM : Click to view the full PDF of ASME RTP-1 2019

M3-100 SCOPE

This Appendix sets forth the micromechanics and classical lamination theory (CLT) analysis method to be used to calculate the laminate properties needed for design and analysis in Subpart 3A and the stress, strain, and strength analysis for Subpart 3B. The geometric and lamina notations used are defined in Figures M3-1 through M3-4.

The CLT method consists of integrating through the thickness of a laminate the physical and mechanical properties of each lamina of a laminate to determine the physical and mechanical properties of the total laminate. The constitutive equations thus formed (the ABD matrix) allow calculations of stresses and strains on a ply-per-ply basis for applied loads or applied deformations.

Direct calculation of laminate properties according to para. M3-400 is required for Subpart 3B design. However, the extensive calculations required for Subpart 3B are not necessary for Subpart 3A, and they would limit its usefulness. For Subpart 3A design, the minimum properties in Table 2A-3 or the properties from demonstration/qualification testing may be used. Paragraphs M3-200 (physical properties), M3-300 (micromechanics theory), M3-310 (unidirectional composites), and M3-320 (random-oriented fibers) present a shorter method for determining lamina elastic properties that may be used with Subpart 3A design rules instead of the equations in paras. M3-400 and M3-600.

The equations defining the theory of failure for use with Subpart 3B design are given in para. M3-500. They give rules for calculating the strength ratio, R, at a point from the stiffness coefficients and the resultant forces and moments at that point.

The elastic properties of oriented and random glass-fiber-reinforced laminas have been calculated from the theory of composite micromechanics. Per para. 2-320, only glass fibers are allowed for structural fiber reinforcement, and thus, the simplified micromechanics equations are based on isotropic fibers and isotropic resins. The micromechanics equations presented for oriented fiber composites are based on the work of Z. Hashin as modified by R. M. Christiansen and are used in MIL-HDBK-17-3F. The equations attributed originally to Halpin-Tsai as presented in the Delaware Composites Design Encyclopedia are also acceptable, as the results are nearly identical. The mechanical properties of randomly reinforced in-plane composites are computed by integrating the calculated oriented fiber properties of a fictitious laminate with the same resin and fiber properties but at volume fraction of the random lamina over all directions between 0 deg and 180 deg.

The properties of each lamina calculated as described above are used to assemble the CLT matrices and used for the subsequent laminate calculations.

Figure M3-1 Moment Resultants

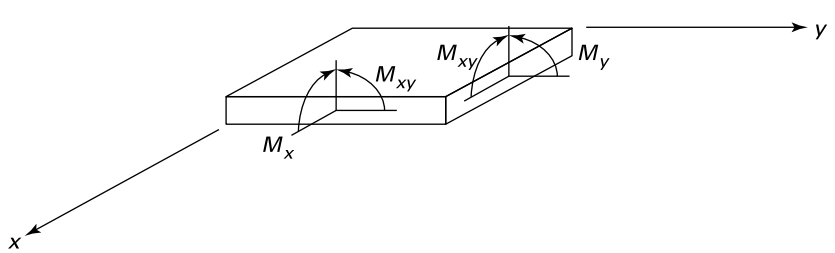

GENERAL NOTE: Units are in.-lb/in. (N·mm/mm).

A limitation of basic CLT is that all calculations are performed about the mid-thickness of the laminate, and thus, it is only valid for balanced (equal numbers of lamina of each orientation above and below the mid-thickness) and symmetric (the laminate sequences are mirror images about the mid-thickness) laminates. In other words, the neutral axis of the laminate for bending in both in-plane directions must be at the mid-thickness of the laminate. This basic CLT does, however, predict the flexural properties correctly, as the results are independent of the plane about which the calculations are performed. To calculate the tensile properties, it is needed to determine the neutral axes in bending for the two structural directions. A simplified approach is shown in the design example in para. M3-610. Paragraph M3-620 demonstrates advanced laminate analysis techniques. The strain limits used for predicting strength have not been changed from ASME RTP-1-2007.

M3-110 Notations Commonly Used in Laminate Analysis

In CLT analysis of plate structures, it is conventional to use 1 and 2 as the principal axes of the material (local axes), defined as the fiber direction and transverse to the fiber direction, respectively, for an individual ply of the laminate, and 3 is in the through-the-thickness direction. The in-plane shear properties that are in the 1-2 direction are commonly compacted to be called the 6 direction.

The x and y directions (global or structural) are then the in-plane structural axes of the principal directions of the structure. Then, z is in the thickness direction. Laminate theory for a cylinder typically uses x as the axial direction and y as the hoop direction.

The angle between the material principal axes and the structural axes of a unidirectional layer is commonly called theta, θ (see Figure M3-4), and the conventional notation is 0 deg for axial, and 90 deg for hoop.

A ply is a lamina of the total laminate lay-up. A cover is defined as a layer of a plus-minus laminate or one layer of a hoop filament winding.

When CLT analysis is applied to thin wall shells, the usual notation for the structural directions are R (radial) for through the thickness, Z for the axial direction, and θ for the angle between the axial direction of the shell and the fiber direction. The 1, 2, and 6 conventions defined above are typically used for the laminas that comprise the shell laminate.

Figures M3-1 through M3-4 show the notation conventions. Note that $N_{xy} = N_{yx}$, and $M_{xy} = M_{yx}$. N_{xy} is the in-plane shear resultant, and M_{xy} produces a saddle-type deformation with the diagonal corners moving equally up and down but in opposite directions. The in-plane force resultants have units of pounds per unit width, and the moment resultants have units of inch-pound per unit width, as is conventional in plate and shell theory.

M3-200 PRELIMINARY CALCULATIONS FOR THE CLT METHOD (19)

Typically, the weight per area of the fiber reinforcement, density of the fiber, and density of the resin for a composite lamina are known. The thickness is then the unknown variable that defines each lamina. If the laminate physically exists, the layer thicknesses can be measured microscopically from the edge of a sample. If the laminate does not physically exist for testing purposes, then either the glass content or thickness is assumed for each lamina and the corresponding value calculated. The volume fraction of glass fiber or the thickness for each lamina of the laminate are calculated using the micromechanics in the equations in para. M3-300.

All laminates designed on the basis of this initial assumption (thickness or volume fraction) must be checked after fabrication to confirm the assumed value is reasonable and based on testing or published data.

ASMENORMDOC.COM : Click to view the full PDF of ASME RTP-1 2019

Figure M3-2 Force Resultants

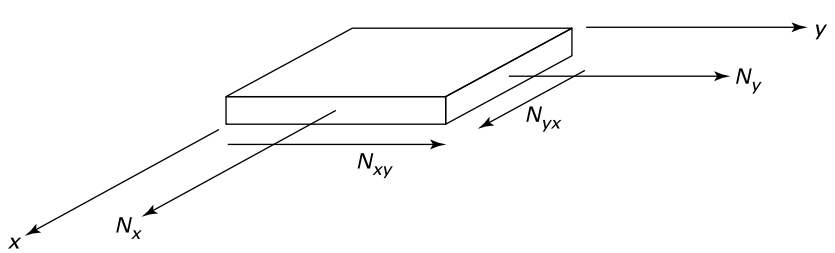

GENERAL NOTE: Units are lb/in. (N/mm).

Figure M3-3 Geometry and Notation of an *n*-Layered Laminate

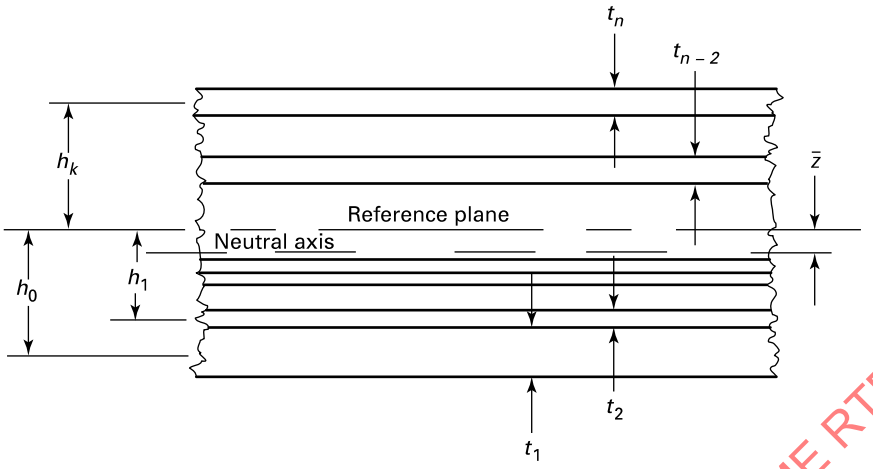

Figure M3-4 Coordinate Systems

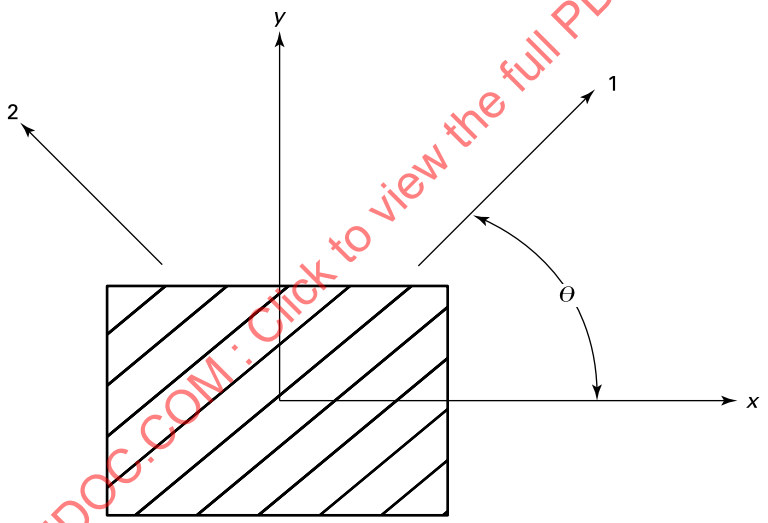

Legend:
x–y = vessel coordinates
1–2 = material coordinates

ASMENORMDOC.COM : Click to view the full PDF of ASME RTP-1 2019

The equations in the following example can be used to calculate the preliminary physical and mechanical properties of each lamina or ply. The numerical material properties are for the resin and fibers used for the filament wound portion of the designs for the examples in paras. M3-610 and M3-620.

(U.S. Customary Units)
Thickness: t = 0.021 in.
Weight per area of fiber reinforcement: W = 1.508 lb/ft^2 for the entire laminate, where the weights for the components are as follows:

W = 0.0938 lb/ft^2 for chopped strand mat (CSM)
= 6.90 × 10^{-3}lb/ft for c-veil
= 0.142 lb/ft^2 for 225-yield glass roving at 8 strands per inch
= 0.0926 lb/ft^2 for 24-oz/yd^2 woven roving with 5/4 construction in the warp direction, and 0.0741 lb/ft^2 in the weft direction

Specific gravity of resin: SG_r = 1.2964
Density of resin: $\rho_m = SG_r \times 0.0361$ lb/in.^{3} = 0.0468 lb/in.^{3}
Density of fiber: ρ_f = 0.0943 lb/in.^{3}
Fiber volume per unit area: = v_f = W/ρ_f = 1.508 in.^{3}/ft^2
Resin volume per unit area: $v_r = 144t - v_f$ = 1.545 in.^{3}/ft^2

Volume fraction fiber: $V_f = \dfrac{v_f}{v_f + v_r} = 0.495$

Weight fraction fiber: $W_f = \dfrac{V_f\rho_f}{V_f\rho_f + (1 - V_f)\rho_m} = 0.664$

Density of composite: $\rho_c = \rho_m(1 - V_f) + \rho_f V_f$ = 0.0703 lb/in.^{3}

(SI Units)
Thickness: t = 0.53 mm
Weight per area of fiber reinforcement: W = 7.363 kg/m^2 for the entire laminate, where the weights for the components are as follows:

W = 0.458 kg/m^2 for chopped strand mat (CSM)
= 0.034 kg/m^2 for c-veil
= 0.694 kg/m^2 for 2 200 tex glass roving at 3.1 per centimeter
= 0.452 kg/m^2 for 810 g/m^2 woven roving with 5/4 construction warp direction, and 0.362 kg/m^2 in the weft direction

Specific gravity of resin: SG_r = 1.2964
Density of resin: $\rho_m = SG_r \times 1\,000$ = 1 296 kg/m^3
Density of fiber: ρ_f = 2 610 kg/m^3
Fiber volume per unit area: $v_f = W/\rho_f$ = 2.660 × 10^{-4} m^3/m^2)
Resin volume per unit area: $v_r = t/1\,000 - v_f$ = 2.725 × 10^{-4} m^3/m^2

Volume fraction fiber: $V_f = \dfrac{v_f}{v_f + v_r} = 0.495$

Weight fraction fiber: $W_f = \dfrac{V_f\rho_f}{V_f\rho_f + (1 - V_f)\rho_m} = 0.664$

Density of composite: $\rho_c = \rho_m(1 - V_f) + \rho_f V_f$ = 1 946 kg/m^3

The material properties at the design temperature of the fiber and resin are generally known, and some typical properties are shown below.

(U.S. Customary Units)
Volume fraction fiber: V_f = 0.495
Volume fraction matrix: $V_m = 1 - V_f$ = 0.505
Modulus of matrix: E_m = 4.000 × 10^5 psi
Poisson's ratio of matrix: ν_m = 0.35

Shear modulus of matrix (assumed isotropic): $G_m = \dfrac{E_m}{2(1 + \nu_m)} = 1.481 \times 10^5$ psi

ASMENORMDOC.COM : Click to view the full PDF of ASME RTP-1 2019

Modulus of fiber: $E_f = 10.5 \times 10^6$
Poisson's ratio of fiber: $\nu_f = 0.22$

Shear modulus of fiber (assumed isotropic): $G_f = \dfrac{E_f}{2\left(1+\nu_f\right)} = 4.303 \times 10^6$ psi

(SI Units)
Volume fraction fiber: $V_f = 0.495$
Volume fraction matrix: $V_m = 1 - V_f = 0.505$
Modulus of matrix: $E_m = 2\,760$ MPa
Poisson's ratio of matrix: $\nu_m = 0.35$

Shear modulus of matrix (assumed isotropic): $G_m = \dfrac{E_m}{2(1+\nu_m)} = 1\,020$ MPa

Modulus of fiber: $E_f = 72\,400$ MPa
Poisson's ratio of fiber: $\nu_f = 0.22$

Shear modulus of fiber (assumed isotropic): $G_f = \dfrac{E_f}{2\left(1+\nu_f\right)} = 29\,700$ MPa

The glass fiber volume fraction, orientation, and resin modulus at the operating temperature are then used to determine the mechanical properties of each lamina or layer from the appropriate equations in paras. M3-310 (unidirectional lamina) and M3-320 (random-oriented lamina). The effective properties, such as thermal expansion and moisture absorbance expansion, and transport properties, such as thermal conductivity, can also be determined but are considered out of the scope of this Standard.

M3-300 MICROMECHANICS EQUATIONS FOR A UNIDIRECTIONAL LAMINA

Notation is that used by MIL-HDBK-17-3F. The subscript *f* refers to fiber, and *m* refers to matrix. The subscript 1 refers to the fiber direction, and subscript 2 refers to the transverse to the fiber direction. *V* refers to volume fraction, and υ refers to Poisson's ratio.
Plane strain bulk modulus for isotropic fibers:

$$K_f = \frac{E_f}{2\left(1 - \upsilon_f - 2\upsilon_f{}^2\right)}$$

Plane strain bulk modulus for isotropic matrix:

$$K_m = \frac{E_m}{2\left(1 - \upsilon_m - 2\upsilon_m{}^2\right)}$$

Plane strain bulk modulus, psi (MPa):

$$k_{\text{star}} = \frac{K_m\left(K_f + G_m\right) \times V_m + K_f(K_m + G_m) \times V_f}{\left(K_f + G_m\right) \times V_m + (K_m + G_m) \times V_f}$$

Modulus in the fiber direction, psi (MPa):

$$E_1 = E_m \times V_m + E_f \times V_f + \frac{4(\upsilon_f - \upsilon_m)^2 \times V_m \times V_f}{\dfrac{V_m}{K_f} + \dfrac{V_f}{K_m} + \dfrac{1}{G_m}}$$

Major Poisson's ratio:

$$\upsilon_{12} = \upsilon_m \times V_m + \upsilon_f \times V_f + \frac{(\upsilon_f - \upsilon_m) \times \left(\dfrac{1}{K_m} - \dfrac{1}{K_f}\right) \times V_m \times V_f}{\dfrac{V_m}{K_f} + \dfrac{V_f}{K_m} + \dfrac{1}{G_m}}$$

ASMENORMDOC.COM : Click to view the full PDF of ASME RTP-1 2019

A three-phase concentric cylinder model produces a quadratic equation for G_2, which is G_{23} in laminate theory:

$$A\left(\frac{G_2}{G_m}\right)^2 + 2B\left(\frac{G_2}{G_m}\right) + C = 0$$

where

$$\begin{aligned}
A &= 3V_f \times V_m{}^2 \times (\gamma - 1)\left(\gamma + \eta_f\right) + \left[(\gamma) \times \eta_m + \eta_f\eta_m - \left(\gamma \times \eta_m - \eta_f\right)V_f{}^3\right] \\
&\quad \times \left[V_f\,\eta_m \times (\gamma - 1) - (\gamma \times \eta_m + 1)\right] \\
B &= -3V_f \times V_m{}^2 \times \left(\gamma - 1\right)\left(\gamma + \eta_f\right) + \frac{1}{2}\left[\gamma \times \eta_m + (\gamma - 1) \times V_f + 1\right] \\
&\quad \times \left[(\eta_m - 1)\left(\gamma + \eta_f\right) - 2\left(\gamma \times \eta_m - \eta_f\right)\times V_f{}^3\right]\ldots \\
&\quad + \frac{V_f}{2} \times (\eta_m + 1)(\gamma - 1) \times \left[\gamma + \eta_f + \left(\gamma \times \eta_m - \eta_f\right)V_f{}^3\right] \\
C &= 3V_f \times V_m{}^2 \times (\gamma - 1)\left(\gamma + \eta_f\right) + \left[\gamma \times \eta_m + (\gamma - 1)V_f + 1\right] \times \left[\gamma \times \eta_f + \left(\gamma \times \eta_m - \eta_f\right)V_f{}^3\right] \\
\gamma &= \frac{G_f}{G_m} \\
\eta_f &= 3 - 4\upsilon_f \\
&\text{or} \\
&= 1 + 2\frac{G_f}{K_f}
\end{aligned}$$

Solving for the positive root of G_2 produces the following:
Transverse shear modulus, psi (MPa):

$$G_2 = \frac{-G_m\left[\left(4B^2 - 4AC\right)^{\frac{1}{2}} + 2B\right]}{2A}$$

Transverse Young's modulus, psi (MPa):

$$E_2 = \frac{4k_{\text{star}} \times G_2}{k_{\text{star}} + m \times G_2}$$

where

$$m = 1 + \frac{4k_{\text{star}} \times \upsilon_{12}{}^2}{E_1}$$

In-plane shear modulus, psi (MPa):

$$G_1 = G_m + \frac{V_f}{\dfrac{1}{G_f - G_m} + \dfrac{V_m}{2G_m}}$$

Note that G_1 is also referred to as G_{12} in laminate theory.
Transverse Poisson's ratio:

$$\upsilon_{23} = \frac{k_{\text{star}} - m \times G_2}{k_{\text{star}} + m \times G_2}$$

Modulus of elasticity in normal direction, psi (MPa):

$$E_{33} = E_{22}$$

ASMENORMDOC.COM : Click to view the full PDF of ASME RTP-1 2019

Minor Poisson's ratio:

$$\upsilon_{21} = E_2 \times \frac{\upsilon_{12}}{E_1}$$

M3-310 Micromechanics of Unidirectional Fiber Composites

The following example shows the application of the basic equations for the micromechanics of a unidirectional lamina with the properties of the fibers and resin shown in para. M3-200: The notation for k_{star} is used in the Halpin-Tsai equations, and K_T is used in the MIL-HDBK-17-3F equations; they have identical values. The values for E_f, E_m, G_m, ν_f, and ν_m are from the equations in para. M3-200.

Plane strain bulk modulus for isotropic fibers:

$$K_f = \frac{E_f}{2\left(1 - \upsilon_f - 2\upsilon_f{}^2\right)} = 7.684 \times 10^6 \text{ psi } (53\,000 \text{ MPa})$$

Plane strain bulk modulus for isotropic matrix:

$$K_m = \frac{E_m}{2\left(1 - \upsilon_m - 2\upsilon_m{}^2\right)} = 4.938 \times 10^5 \text{ psi } (34\,100 \text{ MPa})$$

Plane strain bulk modulus for the lamina, $K_T = k_{\text{star}}$:

$$k_{\text{star}} = \frac{K_m\left(K_f + G_m\right) \times V_m + K_f(K_m + G_m) \times V_f}{\left(K_f + G_m\right) \times V_m + (K_m + G_m) \times V_f} = 1.028 \times 10^6 \text{ psi } (70\,900 \text{ MPa})$$

$$K_T = 1.028 \times 10^6 \text{ psi } (70\,900 \text{ MPa})$$

Young's modulus in the fiber direction:

$$E_1 = E_m \times V_m + E_f \times V_f + \frac{4(\upsilon_f - \upsilon_m)^2 \times V_m \times V_f}{\frac{V_m}{K_f} + \frac{V_f}{K_m} + \frac{1}{G_m}} = 5.400 \times 10^6 \text{ psi } (37\,200 \text{ MPa})$$

Note that E_1 is also referred to as E_{11} in laminate theory.

Poisson's ratio for load in the fiber direction:

$$\upsilon_{12} = \upsilon_m \times V_m + \upsilon_f \times V_f + \frac{(\upsilon_f - \upsilon_m)\left(\frac{1}{K_m} - \frac{1}{K_f}\right) \times V_m \times V_f}{\frac{V_m}{K_f} + \frac{V_f}{K_m} + \frac{1}{G_m}} = 0.28$$

Transverse shear modulus:

$$G_2 = \frac{-G_m\left[\left(4B^2 - 4AC\right)^{\frac{1}{2}} + 2B\right]}{2A} = 3.943 \times 10^5 \text{ psi } (2\,720 \text{ MPa})$$

where

ASMENORMDOC.COM : Click to view the full PDF of ASME RTP-1 2019

$$
\begin{aligned}
A &= 3V_f \times V_m{}^2 \times (\gamma - 1)\left(\gamma + \eta_f\right) + \left[(\gamma) \times \eta_m + \eta_f \eta_m - \left(\gamma \times \eta_m - \eta_f\right) \times V_f{}^3\right] \\
&\quad + \left[\times V_f{}^3\right] \times \left[V_f \eta_m (\gamma - 1) - (\gamma \times \eta_n + 1)\right] \\
B &= 3V_f \times V_m{}^2 \times (\gamma - 1)\left(\gamma + \eta_f\right) + \frac{1}{2}\left[\gamma \times \eta_m + (\gamma - 1)V_f + 1\right] \\
&\quad \times \left[(\eta_m - 1)\left(\gamma + \eta_f\right) - 2\left(\gamma \times \eta_m - \eta_f\right) \times V_f{}^3\right] \ldots \\
&\quad + \frac{V_f}{2} \times (\eta_m + 1)(\gamma - 1) \times \left[\gamma + \eta_f + \left(\gamma \times \eta_m - \eta_f\right) V_f{}^3\right] \\
C &= 3V_f \times V_m{}^2 \times (\gamma - 1)\left(\gamma + \eta_f\right) + \left[\gamma \times \eta_m + (\gamma - 1)V_f + 1\right] \times \left[\gamma + \eta_f + \left(\gamma \times \eta_m - \eta_f\right) V_f{}^3\right] \\
\gamma &= \frac{G_f}{G_m} \\
\eta_f &= 3 - 4\upsilon_f = 2.120 \\
&\quad \text{or} \\
&= 1 + 2\frac{G_f}{K_f} = 2.120 \\
\eta_m &= 3 - 4\upsilon_m
\end{aligned}
$$

Transverse to the fiber direction Young's modulus:

$$E_2 = \frac{4K_T \times G_2}{K_T + mG_2} = 1.122 \times 10^6 \text{ psi } (7\,740 \text{ MPa})$$

where

$$
\begin{aligned}
m &= 1 + \frac{4K_T \times \upsilon_{12}{}^2}{E_1} \\
E_1 &= 5.400 \times 10^6 \text{ psi } \left(37\,200 \text{ MPa}\right) \\
\upsilon_{12} &= 0.28
\end{aligned}
$$

In-plane shear modulus:

$$G_1 = G_m + \frac{V_f}{\dfrac{1}{G_f - G_m} + \dfrac{V_m}{2G_m}} = 4.025 \times 10^5 \text{ psi } (2\,780 \text{ MPa})$$

Poisson's ratios:

$$\upsilon_{21} = \upsilon_{12} \times \frac{E_2}{E_1} = 0.058$$

$$
\begin{aligned}
\upsilon_{23} &= \frac{E_2}{2G_2} - 1 = 0.42 \\
&\quad \text{or} \\
&= \frac{k_{\text{star}} - mG_2}{k_{\text{star}} + mG_2} = 0.42
\end{aligned}
$$

The properties of the lamina that involve through-the-thickness properties are not required for the CLT analyses but are included for information only. Note that calculation of G_{23} is needed for calculating E_2.

M3-320 Micromechanics of Randomly Distributed Fiber-Reinforced Composites

For random-reinforced lamina, the fictitious properties for a continuous, unidirectional lamina with the thickness and weight of reinforcement are calculated as in para. M3-310, and the average properties are determined by integrating over all directions from 0 deg to 180 deg. It is assumed that the lengths of the random strands exceed the critical fiber length

ASMENORMDOC.COM : Click to view the full PDF of ASME RTP-1 2019

[approximately 0.4 in. (10 mm) with 400-ksi (2 760-MPa) strength in the fiber] and exceed 200-psi (1.38-MPa) shear strength at the fiber–resin interface.

The average material properties of a random 1.5-oz/ft^2 (450-g/m^2) chopped strand mat (CSM) material can be defined as follows:

Reduced stiffness:

$$Q_{CSM} = \frac{1}{\pi}\int_0^{\pi} T^{-1} Q T^{-T} d\theta$$

Inverse transformation matrix:

$$rT^{-1} = \begin{bmatrix} m^2 & n^2 & 2mn \\ n^2 & m^2 & -2mn \\ -mn & mn & m^2 - n^2 \end{bmatrix}$$

Transpose of the inverse of the transformation matrix:

$$T^{-T} = \begin{bmatrix} m^2 & n^2 & -mn \\ n^2 & m^2 & mn \\ 2mn & -2mn & m^2 - n^2 \end{bmatrix}$$

These matrix equations can be expanded to yield the following:

$$Q_{11CSM} = \frac{1}{\pi}\left[\int_0^{\pi}\left[q_{11} \times \cos(\theta)^4 + 2\left(q_{12} + 2q_{66}\right) \times \sin(\theta)^2 \times \cos(\theta)^2 + q_{22} \times \sin(\theta)^4\right] d\theta\right]$$

$$Q_{12CSM} = \frac{1}{\pi}\left[\int_0^{\pi}\left[\left(q_{11} + q_{22} - 4q_{66}\right) \times \sin(\theta)^2 \times \cos(\theta)^2 + q_{12} \times \left(\sin(\theta)^4 + \cos(\theta)^4\right)\right] d\theta\right]$$

$$Q_{66CSM} = \frac{1}{\pi}\left[\int_0^{\pi}\left[\left(q_{11} + q_{22} - 2q_{12}\right) \times \sin(\theta)^2 \times \cos(\theta)^2 + q_{66} \times \left(\cos(\theta)^2 - \sin(\theta)^2\right)^2\right] d\theta\right]$$

where the stiffnesses of the CSM are as follows:

$$q_{11} = \frac{E_1}{1 - \upsilon_{12} \times \upsilon_{21}}$$

$$q_{12} = \frac{\upsilon_{12} \times E_2}{1 - \upsilon_{12} \times \upsilon_{21}}$$

$$q_{22} = \frac{E_2}{1 - \upsilon_{12} \times \upsilon_{21}}$$

$$q_{66} = G_{12}$$

These equations are integrated and reduce to the following:

$$Q_{11CSM} = \frac{3}{8} \times q_{11} + \frac{1}{4} \times q_{12} + \frac{1}{2} \times q_{66} + \frac{3}{8} \times q_{22}$$

$$Q_{12CSM} = \frac{1}{8} \times q_{11} + \frac{1}{8} \times q_{22} - \frac{1}{2} \times q_{66} + \frac{3}{4} \times q_{12}$$

$$Q_{66CSM} = \frac{1}{8} \times q_{11} + \frac{1}{8} \times q_{22} - \frac{1}{4} \times q_{12} + \frac{1}{2} \times q_{66}$$

By definition, the properties of an isotropic material (E, G, and υ) are as follows:

ASMENORMDOC.COM : Click to view the full PDF of ASME RTP-1 2019

$$Q_{11CSM} = \frac{E}{1 - \upsilon^2}$$

$$Q_{12CSM} = \frac{\upsilon E}{1 - \upsilon^2}$$

$$Q_{66CSM} = G$$

Substituting into the integrated equations produces the following:

$$\frac{E}{1 - \upsilon^2} = \frac{3}{8} \times \frac{E_1}{1 - \upsilon_{12} \times \upsilon_{21}} + \frac{1}{4} \times \frac{\upsilon_{12} \times E_2}{1 - \upsilon_{12} \times \upsilon_{21}} + \frac{1}{2} \times G_{12} + \frac{3}{8} \times \frac{E_2}{1 - \upsilon_{12} \times \upsilon_{21}}$$

$$\frac{\upsilon E}{1 - \upsilon^2} = \frac{1}{8} \times \frac{E_1}{1 - \upsilon_{12} \times \upsilon_{21}} + \frac{1}{8} \times \frac{E_2}{1 - \upsilon_{12} \times \upsilon_{21}} - \frac{1}{2} \times G_{12} + \frac{3}{4} \times \frac{\upsilon_{12} \times E_2}{1 - \upsilon_{12} \times \upsilon_{21}}$$

$$G = \frac{1}{8} \times \frac{E_1}{1 - \upsilon_{12} \times \upsilon_{21}} + \frac{1}{8} \times \frac{E_2}{1 - \upsilon_{12} \times \upsilon_{21}} - \frac{1}{4} \times \frac{\upsilon_{12} E_2}{1 - \upsilon_{12} \times \upsilon_{21}} + \frac{1}{2} \times G_{12}$$

Defining $\Delta = 1 - \upsilon_{12} \times \upsilon_{21}$ results in the following three equations:

$$\frac{E}{1 - \upsilon^2} = \frac{3}{8} \times \frac{E_1}{\Delta} + \frac{1}{4} \times \frac{\upsilon_{12} \times E_2}{\Delta} + \frac{1}{2} \times G_{12} + \frac{3}{8} \times \frac{E_2}{\Delta} \tag{1}$$

$$\frac{\nu E}{1 - \upsilon^2} = \frac{1}{8} \times \frac{E_1}{\Delta} + \frac{1}{8} \times \frac{E_2}{\Delta} - \frac{1}{2} \times G_{12} + \frac{3}{4} \times \frac{\upsilon_{12} \times E_2}{\Delta} \tag{2}$$

$$G = \frac{1}{8} \times \frac{E_1}{\Delta} + \frac{1}{8} \times \frac{E_2}{\Delta} - \frac{1}{4} \times \left(\frac{\upsilon_{12} \times E_2}{\Delta}\right) + \frac{1}{2} \times G_{12} \tag{3}$$

Equation (2) is for 1.5-oz/ft^2 (450-g/m^2) chopped strand mat using the fiber and resin properties from para. M3-200.

Equation (3), for G, is uncoupled from the first two equations. Solving for υ and E completes the calculations.

$$\upsilon = \frac{E_1 + E_2 - 4G_{12} \times \Delta + 6 \times \upsilon_{12} \times E_2}{3E_2 + 3E_1 + 2\upsilon_{12} \times E_2 + 4G_{12} \times \Delta}$$

$$E = \frac{{E_2}^2 + 2E_2 \times E_1 + 4E_2 \times G_{12} \times \Delta + {E_1}^2 + 4E_1 \times G_{12} \times \Delta - 4{\upsilon_{12}}^2 \times {E_2}^2 + 8\upsilon_{12} \times E_2 \times G_{12} \times \Delta}{(3E_2 + 3E_1 + 2\upsilon_{12} \times E_2 + 4G_{12} \times \Delta) \times \Delta}$$

M3-330 Micromechanics of Unidirectional Fiber Composites (19)

The following example shows random reinforcement micromechanics calculations with weight reinforcement W = 0.09375 lb/ft^2 (0.458 kg/m^2).

(U.S. Customary Units)

Input and Preliminary Calculations for 1.5 oz/ft^2 CSM

Thickness: t = 0.043 in.

Specific gravity of resin: SG_r = 1.296

Density of resin: $\rho_m = SG_r \times 0.0361$ lb/in.^{3} = 0.0468 lb/in.^{3}

Density of fiber: ρ_f = 0.0943 lb/in.^{3}

Fiber volume per unit area: $\upsilon_f = \frac{W}{\rho_f}$ = 0.9942 in.^{3}/ft^2

Resin volume per unit area: $\upsilon_r = 144t - \upsilon_f$ = 5.198 in.^{3}/ft^2

Volume fraction fiber: $V_f = \frac{\upsilon_f}{\upsilon_f + \upsilon_r} = 0.161$

Weight fraction fiber: $W_f = \frac{V_f \rho_f}{V_f \rho_f + \left(1 - V_f\right) \times \rho_m} = 0.278$

ASMENORMDOC.COM : Click to view the full PDF of ASME RTP-1 2019

Density of composite: $\rho_c = \rho_m(1 - V_f) + \rho_f V_f = 0.0545$ lb/in.^{3}

Fiber and Matrix Properties
Volume fraction fiber: $V_f = 0.161$
Volume fraction matrix: $V_m = 1 - V_f = 0.840$
Modulus of matrix: $E_m = 4.000 \times 10^5$ psi
Modulus of fiber: $E_f = 10.5 \times 10^6$ psi
Poisson's ratio of fiber: $\nu_f = 0.22$
Poisson's ratio of matrix: $\nu_m = 0.35$

Shear modulus of matrix (assumed isotropic): $G_m = \dfrac{E_m}{2(1+\nu_m)} = 1.481 \times 10^5$ psi

Shear modulus of fiber (assumed isotropic): $G_f = \dfrac{E_f}{2(1+\nu_f)} = 4.303 \times 10^6$ psi

(SI Units)
Input and Preliminary Calculations for 450 g/m^2 CSM
Thickness: $t = 1.09$ mm
Specific gravity of resin: $SG_r = 1.296$
Density of resin: $\rho_m = SG_r \times 1\,000 = 1\,296$ kg/m^3
Density of fiber: $\rho_f = 2\,610$ kg/m^3

Fiber volume per unit area: $\upsilon_f = \dfrac{W}{\rho_f} = 1.754 \times 10^{-4}$ m^3/m^2

Resin volume per unit area: $\upsilon_f = t/1\,000 - \upsilon_f = 9.169 \times 10^{-4}$ m^3/m^2

Volume fraction fiber: $V_f = \dfrac{\upsilon_f}{\upsilon_f + \upsilon_r} = 0.161$

Weight fraction fiber: $W_f = \dfrac{V_f \rho_f}{V_f \rho_f + \left(1 - V_f\right) \times \rho_m} = 0.278$

Density of composite: $\rho_c = \rho_m(1 - V_f) + \rho_f V_f = 1\,507$ kg/m^3

Fiber and Matrix Properties
Volume fraction fiber: $V_f = 0.161$
Volume fraction matrix: $V_m = 1 - V_f = 0.840$
Modulus of matrix: $E_m = 2\,760$ MPa
Modulus of fiber: $E_f = 72\,400$ MPa
Poisson's ratio of fiber: $\nu_f = 0.22$
Poisson's ratio of matrix: $\nu_m = 0.35$

Shear modulus of matrix (assumed isotropic): $G_m = \dfrac{E_m}{2(1+\nu_m)} = 1\,020$ MPa

Shear modulus of fiber (assumed isotropic): $G_f = \dfrac{E_f}{2(1+\nu_f)} = 29\,700$ MPa

Micromechanics for a unidirectional composite based on the random reinforcement properties given above are as follows:
Plane strain bulk modulus for isotropic fibers:

$$K_f = \frac{E_f}{2\left(1 - \nu_f - 2\nu_f{}^2\right)} = 7.684 \times 10^6 \text{ psi } (53\,000 \text{ MPa})$$

Plane strain bulk modulus for isotropic matrix:

$$K_m = \frac{E_m}{2\left(1 - \nu_m - 2\nu_m{}^2\right)} = 4.938 \times 10^5 \text{ psi } (3\,410 \text{ MPa})$$

Plane strain bulk modulus for the lamina:

ASMENORMDOC.COM : Click to view the full PDF of ASME RTP-1 2019

$$K_T = k_{\text{star}} = \frac{K_m\left(K_f + G_m\right) \times V_m + K_f(K_m + G_m) \times V_f}{\left(K_f + G_m\right)V_m + (K_m + G_m)V_f} = 6.048 \times 10^5 \text{ psi } (4170 \text{ MPa})$$

Young's modulus in the fiber direction:

$$E_1 = E_m \times V_m + E_f \times V_f + \frac{4(\nu_f - \nu_m)^2 \times V_m \times V_f}{\frac{V_m}{K_f} + \frac{V_f}{K_m} + \frac{1}{G_m}} = 2.023 \times 10^6 \text{ psi } (14000 \text{ MPa})$$

Poisson's ratio for load in the fiber direction:

$$\nu_{12} = \nu_m \times V_m + \nu_f \times V_f + \frac{(\nu_f - \nu_m)\left(\frac{1}{K_m} - \frac{1}{K_f}\right) \times V_m \times V_f}{\frac{V_m}{K_f} + \frac{V_f}{K_m} + \frac{1}{G_m}} = 0.32$$

Transverse shear modulus:

$$G_2 = \frac{-G_m\left[\left(4B^2 - 4AC\right)^{\frac{1}{2}} + 2B\right]}{2A} = 1.922 \times 10^5 \text{ psi } (1330 \text{ MPa})$$

where

$$\begin{aligned}
A &= 3V_f{V_m}^2 \times (\gamma - 1)\left(\gamma + \eta_f\right) + \left[(\gamma) \times \eta_m + \eta_f\eta_m - \left(\gamma \times \eta_m - \eta_f\right){V_f}^3\right] \\
&\quad \times \left[V_f\eta_m \times (\gamma - 1) - (\gamma \times \eta_m + 1)\right] \\
B &= 3V_f \times {V_m}^2 \times \left(\gamma - 1\right)\left(\gamma + \eta_f\right) + \frac{1}{2}\left[\gamma \times \eta_m + (\gamma - 1) \times V_f + 1\right] \\
&\quad \times \left[(\eta_m - 1)\left(\gamma + \eta_f\right) - 2\left(\gamma \times \eta_m - \eta_f\right) \times {V_f}^3\right] \ldots \\
&\quad + \frac{V_f}{2} \times (\eta_m + 1)(\gamma - 1) \times \left[\gamma + \eta_f + \left(\gamma \times \eta_m - \eta_f\right){V_f}^3\right] \\
C &= 3V_f \times {V_m}^2 \times (\gamma - 1)\left(\gamma + \eta_f\right) + \left[\gamma \times \eta_m + (\gamma - 1) \times V_f + 1\right] \times \left[\gamma + \eta_f + \left(\gamma \times \eta_m - \eta_f\right) \times {V_f}^3\right] \\
\gamma &= \frac{G_f}{G_m} \\
\eta_f &= 3 - 4\upsilon_f = 2.120 \\
&\text{or} \\
&= 1 + 2\frac{G_f}{K_f} = 2.120 \\
\eta_m &= 3 - 4\upsilon_m
\end{aligned}$$

Transverse Young's modulus:

$$E_2 = \frac{4K_T \times G_2}{K_T + mG_2} = 5.663 \times 10^5 \text{ psi } (3900 \text{ MPa})$$

where

$$\begin{aligned}
m &= 1 + \frac{4K_T \times {\nu_{12}}^2}{E_1} \\
E_1 &= 2.023 \times 10^6 \text{ psi } (14000 \text{ MPa}) \\
\nu_{12} &= 0.32
\end{aligned}$$

ASMENORMDOC.COM : Click to view the full PDF of ASME RTP-1 2019

Note that E_2 is also referred to as E_{22} in laminate theory.
Plane strain bulk modulus for the lamina:

$$k_{\text{star}} = K_m + \frac{V_f}{\dfrac{1}{K_f - K_m} + \dfrac{V_m}{K_m + G_m}} = 6.048 \times 10^5 \text{ psi } (4\,170 \text{ MPa})$$

In-plane shear modulus:

$$G_1 = G_m + \frac{V_f}{\dfrac{1}{G_f - G_m} + \dfrac{V_m}{2G_m}} = 2.004 \times 10^5 \text{ psi } (1\,380 \text{ MPa})$$

Poisson's ratios:

$$\nu_{21} = \nu_{12} \times \frac{E_2}{E_1} = 0.09$$

$$\upsilon_{23} = \frac{E_2}{2G_2} - 1 = 0.47$$

or

$$= \frac{k_{\text{star}} - mG_2}{k_{\text{star}} + mG_2} = 0.47$$

Micromechanics of random composites that are isotropic in-plane for the CSM material are as follows:
Young's modulus:

$$E = \frac{E_{11}{}^2 + 4E_{11} \times G_{12} \times \Delta + 2E_{11} \times E_{22} + 8\upsilon_{12} \times E_{22} \times G_{12} \times \Delta - 4\upsilon_{12}{}^2 \times E_{22}{}^2 + 4E_{22} \times G_{12} \times \Delta + E_{22}{}^2}{\Delta(3E_{11} + 2\upsilon_{12} \times E_{22} + 3E_{22} + 4G_{12} \times \Delta)} = 1.025 \times 10^6 \text{ psi } (7\,070 \text{ MPa})$$

where

$E_{11} = E_1$
$E_{22} = E_2$
$G_{12} = G_1$
$\Delta = 1 - \upsilon_{12} \times \upsilon_{21} = 0.97$

In-plane shear modulus:

$$G = \frac{E_{11} - 2\upsilon_{12} \times E_{22} + E_{22} + 4G_{12} \times \Delta}{8\Delta} = 3.863 \times 10^5 \text{ psi } (2\,660 \text{ MPa})$$

In-plane Poisson's ratio:

$$\nu = \frac{E_{11} + 6\upsilon_{12} \times E_{22} + E_{22} - 4G_{12} \times \Delta}{3E_{11} + 2\upsilon_{12} \times E_{22} + 3E_{22} + 4G_{12} \times \Delta} = 0.33$$

The predicted properties of the lamina that involve through-the-thickness properties are not required for the CLT analyses but are included for information only.

(19) M3-400 THE CLT ANALYSIS PROCEDURE

The use of the CLT analysis equations do not require any sophisticated or complex mathematical calculations, but the enormity of the arithmetic for most laminates generally requires using a computer program for speed and accuracy. There are a number of commercial programs available.

Other valid statements of lamination analysis may be used in place of the equations herein, but it is the responsibility of the Qualified Designer to show that they are mathematically and physically consistent with the equations herein.

The basic constitutive equations for laminate theory are shown in the matrix below.

ASMENORMDOC.COM : Click to view the full PDF of ASME RTP-1 2019

$$\begin{bmatrix} N_x \\ N_y \\ N_{xy} \\ M_x \\ M_y \\ M_{xy} \end{bmatrix} = \begin{bmatrix} A_{11} & A_{12} & A_{16} & B_{11} & B_{12} & B_{16} \\ A_{21} & A_{22} & A_{26} & B_{21} & B_{22} & B_{26} \\ A_{61} & A_{62} & A_{66} & B_{61} & B_{62} & B_{66} \\ B_{11} & B_{12} & B_{16} & D_{11} & D_{12} & D_{16} \\ B_{21} & B_{22} & B_{26} & D_{21} & D_{22} & D_{26} \\ B_{61} & B_{62} & B_{66} & D_{61} & D_{62} & D_{66} \end{bmatrix} \times \begin{bmatrix} \varepsilon_{xo} \\ \varepsilon_{yo} \\ \gamma_{xyo} \\ \kappa_x \\ \kappa_y \\ \kappa_{xy} \end{bmatrix}$$

N_x, N_y, and N_{xy} are the force resultants [lb/in. (N/mm)]. M_x, M_y, and M_{xy} are the moment resultants [in.-lb/in. (N·mm/mm)]. ε_{xo}, ε_{yo}, and ε_{xyo} are the midplane strains, and κ_x, κ_y, and κ_{xy} are the curvatures.

Explicit expansion of the above matrix:

$$\begin{bmatrix} N_x \\ N_y \\ N_{xy} \\ M_x \\ M_y \\ M_{xy} \end{bmatrix} = \begin{bmatrix} A_{11} \times \varepsilon_{xo} + A_{12} \times \varepsilon_{yo} + A_{16} \times \gamma_{xyo} + B_{11} \times \kappa_x + B_{12} \times \kappa_y + B_{16} \times \kappa_{xy} \\ A_{21} \times \varepsilon_{xo} + A_{22} \times \varepsilon_{yo} + A_{26} \times \gamma_{xyo} + B_{21} \times \kappa_x + B_{22} \times \kappa_y + B_{26} \times \kappa_{xy} \\ A_{61} \times \varepsilon_{xo} + A_{62} \times \varepsilon_{yo} + A_{66} \times \gamma_{xyo} + B_{61} \times \kappa_x + B_{62} \times \kappa_y + B_{66} \times \kappa_{xy} \\ B_{11} \times \varepsilon_{xo} + B_{12} \times \varepsilon_{yo} + B_{16} \times \gamma_{xyo} + D_{11} \times \kappa_x + D_{12} \times \kappa_y + D_{16} \times \kappa_{xy} \\ B_{21} \times \varepsilon_{xo} + B_{22} \times \varepsilon_{yo} + B_{26} \times \gamma_{xyo} + D_{21} \times \kappa_x + D_{22} \times \kappa_y + D_{26} \times \kappa_{xy} \\ B_{61} \times \varepsilon_{xo} + B_{62} \times \varepsilon_{yo} + B_{66} \times \gamma_{xyo} + D_{61} \times \kappa_x + D_{62} \times \kappa_y + D_{66} \times \kappa_{xy} \end{bmatrix}$$

where

$$A_{ij} = \sum_{k=1}^{n} \left[\mathrm{Q\,bar}_{ij_k} [(h_k) - (h_{k-1})] \right]$$

$$B_{ij} = \frac{1}{2} \sum_{k=1}^{n} \left[\mathrm{Q\,bar}_{ij_k} \left[(h_k)^2 - (h_{k-1})^2 \right] \right]$$

$$D_{ij} = \frac{1}{3} \sum_{k=1}^{n} \left[\mathrm{Q\,bar}_{ij_k} \left[(h_k)^3 - (h_{k-1})^3 \right] \right]$$

h_k = the vectorial distance from the geometric reference midplane of the laminate (defined as $z = 0$) to the upper surface of the nth lamina. The neutral axes in the x and y directions may be different from the midplane, depending on the laminate sequence. Any dimension below the midplane is negative, and any dimension above the midplane is positive. h_0 is then the distance from the midplane to the bottom of the laminate and is negative (see Figure M3-3).

i, j = 1, 2, 6

n = total number of plies

The Qbar equations are as follows:

$$\mathrm{Q\,bar}_{11} = Q_{11} \times m^4 + Q_{22} \times n^4 + 2(Q_{12} + 2Q_{66}) \times m^2 \times n^2$$

$$\mathrm{Q\,bar}_{22} = Q_{11} \times n^4 + Q_{22} \times m^4 + (Q_{12} + 2Q_{66}) \times 2m^2 \times n^2$$

$$\mathrm{Q\,bar}_{12} = (Q_{11} + Q_{22} - 4Q_{66}) \times m^2 \times n^2 + Q_{12}\left(m^4 + n^4\right)$$

$$\mathrm{Q\,bar}_{16} = -m \times n^3 \times Q_{22} + m^3 \times n \times Q_{11} - mn\left(m^2 - n^2\right)(2Q_{66} + Q_{12})$$

$$\mathrm{Q\,bar}_{26} = m \times n^3 \times Q_{11} - m^3 \times n \times Q_{22} + mn\left(m^2 - n^2\right) \times (2Q_{66} + Q_{12})$$

ASMENORMDOC.COM : Click to view the full PDF of ASME RTP-1 2019

$$Q\,bar_{66} = (Q_{11} + Q_{22} - 2Q_{12}) \times m^2 \times n^2 + Q_{66}\left(m^2 - n^2\right)^2$$

where

m = cosine

n = sine of the angle between material and structural axes per Figure M3-4

$Q_{11} = \dfrac{E_1}{\Delta}$

$Q_{12} = Q_{21} = \dfrac{\upsilon_{12} \times E_2}{\Delta} = \dfrac{\upsilon_{21} \times E_1}{\Delta}$

$Q_{22} = \dfrac{E_2}{\Delta}$

$Q_{66} = G_1$

$\Delta = 1 - \upsilon_{12} \times \upsilon_{21}$

E_1, E_2, G_{12}, and G_{21} are from test data or the micromechanics calculations performed above in para. M3-300.

Typically, the force and moment resultants are known, and it is necessary to invert the 6 × 6 ABD matrix in the first matrix to solve for the midplane strains and curvatures.

The compliance equations are shown in the matrix below.

$$\begin{bmatrix} \varepsilon_{xo} \\ \varepsilon_{yo} \\ \gamma_{xyo} \\ \kappa_x \\ \kappa_y \\ \kappa_{xy} \end{bmatrix} = \begin{bmatrix} S_{11} & S_{12} & S_{13} & S_{14} & S_{15} & S_{16} \\ S_{21} & S_{22} & S_{23} & S_{24} & S_{25} & S_{26} \\ S_{31} & S_{32} & S_{33} & S_{34} & S_{35} & S_{36} \\ S_{41} & S_{42} & S_{43} & S_{44} & S_{45} & S_{46} \\ S_{51} & S_{52} & S_{53} & S_{54} & S_{55} & S_{56} \\ S_{61} & S_{62} & S_{63} & S_{64} & S_{65} & S_{66} \end{bmatrix} \times \begin{bmatrix} N_x \\ N_y \\ N_{xy} \\ M_x \\ M_y \\ M_{xy} \end{bmatrix}$$

The midplane strains and curvatures are then used to calculate stresses and strains in the structural directions for each lamina.

The strain vector with the midplane strains and curvatures and the ABD matrix have been calculated; thus, the left-hand side of the first matrix is determined, and the stress strain equations for a laminate are as follows:

$$\begin{bmatrix} \varepsilon_x \\ \varepsilon_y \\ \gamma_{xy} \end{bmatrix} = \begin{bmatrix} \varepsilon_{xo} \\ \varepsilon_{yo} \\ \gamma_{xyo} \end{bmatrix} + z \begin{bmatrix} \kappa_x \\ \kappa_y \\ \kappa_{xy} \end{bmatrix} \begin{bmatrix} \sigma_x \\ \sigma_y \\ \sigma_{xy} \end{bmatrix}_k = \begin{bmatrix} Q\,bar_{11} & Q\,bar_{12} & Q\,bar_{16} \\ Q\,bar_{12} & Q\,bar_{22} & Q\,bar_{26} \\ Q\,bar_{16} & Q\,bar_{26} & Q\,bar_{66} \end{bmatrix}_k \times \begin{bmatrix} \varepsilon_x \\ \varepsilon_y \\ \gamma_{xy} \end{bmatrix}$$

Transformation of the material strains to the structural strains:

$$\begin{bmatrix} \varepsilon_x \\ \varepsilon_y \\ \frac{1}{2}\gamma_{xy} \end{bmatrix} = \begin{bmatrix} m^2 & n^2 & -2mn \\ n^2 & m^2 & 2mn \\ mn & -mn & m^2 - n^2 \end{bmatrix} \begin{bmatrix} \varepsilon_1 \\ \varepsilon_2 \\ \frac{1}{2}\gamma_6 \end{bmatrix}$$

Transformation of the structural strains to the material strains:

$$\begin{bmatrix} \varepsilon_1 \\ \varepsilon_2 \\ \frac{1}{2}\gamma_6 \end{bmatrix} = \begin{bmatrix} m^2 & n^2 & 2mn \\ n^2 & m^2 & -2mn \\ -mn & mn & m^2 - n^2 \end{bmatrix} \begin{bmatrix} \varepsilon_x \\ \varepsilon_y \\ \frac{1}{2}\gamma_{xy} \end{bmatrix}$$

Transformation of the structural stresses to the material stresses:

$$\begin{bmatrix} \sigma_1 \\ \sigma_2 \\ \sigma_6 \end{bmatrix} = \begin{bmatrix} m^2 & n^2 & 2mn \\ n^2 & m^2 & -2mn \\ -mn & 2mn & m^2 - n^2 \end{bmatrix} \begin{bmatrix} \sigma_x \\ \sigma_y \\ \sigma_{xy} \end{bmatrix}$$

Transformation of the material stresses to the structural stresses:

ASMENORMDOC.COM : Click to view the full PDF of ASME RTP-1 2019

$$\begin{bmatrix} \sigma_x \\ \sigma_y \\ \sigma_{xy} \end{bmatrix} = \begin{bmatrix} m^2 & n^2 & 2mn \\ n^2 & m^2 & -2mn \\ -mn & 2mn & m^2 - n^2 \end{bmatrix} \begin{bmatrix} \sigma_1 \\ \sigma_2 \\ \sigma_6 \end{bmatrix}$$

NOTE: The engineering shear strain $\gamma_{,xy}$, is not a tensorial quantity as it doesn't rotate per the transformation equations. The tensorial shear strain is defined as $\varepsilon_{xy} = \frac{1}{2}\gamma_{xy}$. The shear stresses do transform as tensorial quantities.

Effective material properties in the structural axes are calculated from the following:

$$E_x = \frac{1}{t \times S_{11}} = \frac{A_{11} \times A_{22} - A_{12}{}^2}{t \times A_{22}}$$

$$E_y = \frac{1}{t \times S_{22}} = \frac{A_{11} \times A_{22} - A_{12}{}^2}{t \times A_{11}}$$

$$G_{xy} = \frac{1}{t \times S_{33}} = \frac{A_{66}}{t}$$

$$\upsilon_{xy} = \frac{-S_{12}}{S_{11}} = \frac{A_{12}}{A_{22}}$$

where the S_{ij} terms are from the compliance matrix, the A_{ij} terms are from the stiffness matrix, and t is the total thickness of the laminate.

NOTE: These are only valid for balanced and symmetric laminates; all the B_{ij} terms are 0, and there is no coupling of extensional and bending loads.

M3-500 THE QUADRATIC INTERACTION CRITERION

M3-510 Notation and Equations (19)

In general, a plate lamina has five independent uniaxial ultimate strengths: tensile and compressive strengths in the principal direction of greater strength, tensile and compressive strengths in the direction of lesser strength, and shear strength with respect to a pure shear stress in the principal directions. Type I laminates are treated as isotropic herein, so any direction can be considered as a principal direction. In Type II, laminates are modeled as two orthogonal plies.

For Type X laminates, the principal direction of greater strength is aligned with continuous roving, and the principal direction of lesser strength is perpendicular to the roving. Further, the five strength values may be unequal. The quadratic interaction criterion defines the interactions between the five strengths in cases when more than one component of stress is applied to the lamina, and it defines allowable stress states in terms of the strengths.

The criteria in para. 3B-500 are applied to each lamina separately, and if one or more lamina fail the criteria, the corresponding load on the vessel is not allowed. The prediction of resin failure does not constitute failure as there may be transverse fibers in that load direction to protect in any further deformation. Advanced techniques, such as progressive failure analyses, are allowed if performed by the Qualified Designer with the caveat that any resin failure in the corrosion barrier may likely lead to premature failure of the vessel.

The strength ratio is the ratio of the stress capacity to a calculated stress for a particular layer. The allowable stress ratios are given in para. 3B-500. This strength theory defines a failure envelope for combined stresses acting concurrently. The Tsai-Wu version of stress ratios are calculated using the quadratic interaction equation shown below.

$$R^2\left(F_{xx} \times \sigma^2{}_x + 2F_{xy} \times \sigma_x \times \sigma_y + F_{yy} \times \sigma^2{}_y + F_{ss} \times \sigma_s\right)^2 + R\left(F_x \times \sigma_x + F_y \times \sigma_y\right) - 1 = 0$$

The strength ratio for each lamina is then given by the following:

$$R = \frac{-H \pm \sqrt{H^2 + 4G}}{2G}$$

where

$G = F_{xx} \times \sigma^2{}_x + 2F_{xy} \times \sigma_x \times \sigma_y + F_{yy} \times \sigma^2{}_y + F_{ss} \times \sigma^2{}_s$

ASMENORMDOC.COM : Click to view the full PDF of ASME RTP-1 2019

$H = F_x \times \sigma_x + F_y \times \sigma_y$

The strength coefficients are calculated based on the tested strengths of each lamina or the strain limits given below:

$$F_{ss} = \frac{1}{S^2}$$

$$F_x = \frac{1}{X} - \frac{1}{X_c}$$

$$F_{xx} = \frac{1}{X \times X_c}$$

$$F_{xy} = -\frac{1}{2}\sqrt{F_{xx} \times F_{yy}}$$

$$F_y = \frac{1}{Y} - \frac{1}{Y_c}$$

$$F_{yy} = \frac{1}{Y \times Y_c}$$

NOTE: The F_{xy} term is a biaxial term and is assumed to be equal to the equation given above.

where

S = the ultimate in-plane shear strength
X = the ultimate tensile strength in the fiber direction
X_c = the ultimate compressive strength in the fiber direction
Y = the ultimate tensile strength transverse to the fiber direction
Y_c = the ultimate compressive strength transverse to the fiber direction

The layer strengths may be determined from test data for each lamina or may be calculated from the strain limits below.

$$S = \epsilon_{xy} \times G_{xy}$$

$$X = \epsilon_{xt} \times E_x$$

$$X_c = \epsilon_{xc} \times E_x$$

$$Y = \epsilon_{yt} \times E_y$$

$$Y_c = \epsilon_{yc} \times E_y$$

where E_x in the fiber direction, E_y transverse to the fiber direction, and G_{xy} in-plane are the elastic moduli that are determined by testing or the micromechanics equations in para. M3-300. It is assumed that the tensile and compressive moduli are equal.

The allowable strain limits can be measured from testing, or the following strain limits may be used (these are unchanged from ASME RTP-1–2007):

Layer Type	Random Fiber	Oriented Fiber
ε_{xt}	0.0150	0.0200
ε_{xc}	0.0200	0.0120
ε_{yt}	0.0150	0.0015
ε_{yc}	0.0200	0.0080
ε_{xy}	0.0268	0.0268

ASMENORMDOC.COM : Click to view the full PDF of ASME RTP-1 2019

Caution should be used where the resin strain-to-failure properties at the worst-case design temperature are less than the strains listed above.

If the F_{xy} term is set to 0, which usually has a minimal effect on the results, the fiber- and matrix-dominated strengths become uncoupled and produce the following equations:

Fiber failure:

$$R^2 \times F_{xx} \times \sigma^2{}_x + R \times F_x \times \sigma_x - 1 = 0$$

Matrix failure:

$$R^2(F_{yy} \times \sigma y^2 + F_{ss} \times \sigma^2{}_s) + R \times F_y \times \sigma_y - 1 = 0$$

This is referred to in the literature as the Hahn, Erikson, and Tsai failure theory.

M3-520 Calculation of Layer Strains and Stresses

The stresses and strains are calculated per the procedures in para. M3-400.

M3-530 Calculation of Strength Ratios

The strength ratio, which is the ratio of the stress capacity of a single layer relative to the stress generated by an applied loading condition, is calculated using the stresses from para. M3-400 and the appropriate quadratic interaction equation in para. M3-510.

M3-600 DESIGN EXAMPLE CALCULATIONS

(19)

To illustrate the CLT method, assume a cylinder laminate construction of *VMM* $(\pm 54 \text{ deg})_3$ *MRM*. The layer of surfacing veil, *V*, is 0.11-oz/ft^2 (34-g/m^2) glass fiber veil 0.013 in. (0.33 mm) thick, and the mat layers, *M*, are 1.5-oz/ft^2 (450-g/m^2) chopped strand mat 0.043 in. (1.09 mm) thick. The filament wound layers $(\pm 54)_3$ consist of three wind pattern closures with a wind angle of 54 deg relative to the mandrel axis, using 225-yard/lb (2 200 Tex) roving and with a roving spacing of 8 strands per inch (3.1 strands per centimeter) of band width with a total thickness of 0.127 in. (3.23 mm) [0.021 in. (0.53 mm) per ply or 0.042 in. (1.08 mm) per layer or cover]. The woven roving layer, *R*, consists of 24-oz/yd^2 (810-g/m^2) fabric with a 5 × 4 weave style, with the warp fibers [5 rovings per inch (2.0 strands per centimeter)] in the axial direction, and the weft fibers [4 rovings per inch (1.6 strands per centimeter)] in the hoop direction, with a total thickness of 0.039 in. (0.99 mm) per layer. The glass fiber used is E glass with a density, D_f, of 0.0943 lb/in.^{3} (2 610 kg/m^3). The tensile modulus is 10.5 × 10^6 psi (72 400 MPa), and the Poisson's ratio is 0.22. The resin density, D_r, is 0.0468 lb/in.^{3} (1 295 kg/m^3). The tensile modulus of the matrix at the design temperature is 400,000 psi (2 760 MPa), and the resin Poisson's ratio is 0.35. The total thickness of the laminate is 0.351 in. (8.92 mm).

M3-610 Cylinder Simplified Design Example Calculations

The following assumptions are inherent to the simplified calculations in eqs. (1), (2), and (3) below.

(a) The ratio of the cylinder radius to the cylinder thickness is sufficiently large that membrane theory is applicable. This is typically given as $R/t > 10$. The loads are global.

(b) The lay-up is balanced and symmetric. All the $B_{ij} = 0$, and the A and D matrices become uncoupled.

(c) Properties are calculated about the mid-thickness of the laminate. This means the lay-up sequence does not affect the calculations. This implies that the extensional and flexural moduli are equivalent.

(d) All materials behave linearly elastically.

(e) In general, this lay-up and properties cannot be used for evaluating any local loads on the cylinder, such as pipe supports or platform clips.

The following loads can be applied to the cylinder and converted to membrane loads for a cylinder of radius *R*; Z refers to the axial direction, and θ refers to the hoop direction:

Membrane Cylinder Loads

A = axial load, lb (N), where tension is positive
H = static head, psi (MPa)
M = cylindrical bending moment, in.-lb (N·mm)
P = pressure, psi (MPa), where internal pressure is positive
R = cylinder radius, in. (mm)
S = shear load, lb (N)
T_0 = torque, in.-lb (N·mm)

ASMENORMDOC.COM : Click to view the full PDF of ASME RTP-1 2019

(19)

Table M3-1 Properties for Materials in the Design Example

Material	E_{11}	E_{22}	G_{12}	ν_{12}	Ply Thickness	Number of Plies	Thickness [Note (1)]	α, deg
			U.S. Customary Units					
c-veil	5.492×10^5 psi	5.492×10^5 psi	2.049×10^5 psi	0.34	0.013 in.	1	0.013 in.	0
1.5-oz/ft^2 mat	1.025×10^6 psi	1.025×10^6 psi	3.863×10^5 psi	0.33	0.043 in.	4	0.172 in.	0
24-oz/yd^2 woven roving								
Weft direction	3.643×10^6 psi	7.641×10^5 psi	2.748×10^5 psi	0.30	0.017 in.	1	0.017 in.	90
Warp direction	3.532×10^6 psi	7.476×10^5 psi	2.688×10^5 psi	0.30	0.022 in.	1	0.022 in.	0
Filament wound roving	5.398×10^6 psi	1.122×10^6 psi	4.025×10^5 psi	0.28	0.021 in.	6	0.127 in.	54
			SI Units					
c-veil	3 790 MPa	3 790 MPa	1 410 MPa	0.34	0.33 mm	1	0.33 mm	0
450-g/m^2 mat	7 070 MPa	7 070 MPa	2 660 MPa	0.33	1.09 mm	4	4.37 mm	0
810-g/m^2 woven roving								
Weft direction	25 100 MPa	5 270 MPa	1 900 MPa	0.30	0.43 mm	1	0.43 mm	90
Warp direction	24 400 MPa	5 160 MPa	1 850 MPa	0.30	0.56 mm	1	0.56 mm	0
Filament wound roving	37 200 MPa	7 740 MPa	2 780 MPa	0.28	0.53 mm	6	3.23 mm	54

NOTE: (1) Total thickness for all layers in the design example laminate = 0.351 in. (8.92 mm).

Equivalent Membrane Loads Applied to the Laminate

Axial load, lb/in. (N/mm):

$$NZ = \frac{PR}{2} + \frac{A}{2\pi R} \pm \frac{M}{\pi R^2} \tag{1}$$

Hoop load, lb/in. (N/mm):

$$NT = PR + HR \tag{2}$$

In-plane shear load, lb/in. (N/mm):

$$NZT = \frac{S}{\pi R} + \frac{To}{\pi R^2} \tag{3}$$

M3-611 Lamina Mechanical Properties Using Micromechanics. Using the fiber and matrix properties and the fiber orientations, the corresponding tensile modulus in the *x* and *y* directions, in-plane shear modulus, and Poisson's ratios are obtained from the appropriate equations in paras. M3-310 and M3-320 for all the layers in the laminate. This results in the properties for each of the materials given in the design example, as shown in Table M3-1.

The A matrix and A inverse matrices are then calculated using the following:

(a) A Matrix

(U.S. Customary Units)

$$\begin{bmatrix} 5.076 \times 10^5 & 2.425 \times 10^5 & 0.000 \\ 2.425 \times 10^5 & 6.657 \times 10^5 & 0.000 \\ 0.000 & 0.000 & 2.567 \times 10^5 \end{bmatrix} \text{lb/in.}$$

(SI Units)

$$\begin{bmatrix} 8.889 \times 10^4 & 4.247 \times 10^4 & 0.000 \\ 4.247 \times 10^4 & 1.166 \times 10^5 & 0.000 \\ 0.000 & 0.000 & 4.496 \times 10^4 \end{bmatrix} \text{N/mm}$$

where the determinent of matrix A is 7.165×10^{16} (lb/in.)^3 [3.849×10^{14} (N/mm)^3].

ASMENORMDOC.COM : Click to view the full PDF of ASME RTP-1 2019

(b) A Inverse Matrix

(U.S. Customary Units)

$$\begin{bmatrix} 2.385 \times 10^{-6} & -8.689 \times 10^{-7} & 0.000 \\ -8.689 \times 10^{-7} & 1.819 \times 10^{-6} & 0.000 \\ 0.000 & 0.000 & 3.896 \times 10^{-6} \end{bmatrix} \text{in./lb}$$

(SI Units)

$$\begin{bmatrix} 1.362 \times 10^{-5} & -4.962 \times 10^{-6} & 0.000 \\ -4.962 \times 10^{-6} & 1.039 \times 10^{-5} & 0.000 \\ 0.000 & 0.000 & 2.225 \times 10^{-5} \end{bmatrix} \text{mm/N}$$

The effective mechanical and physical properties for use in Subpart 3A design are as follows:

Effective Mechanical Properties	Values	
	U.S. Customary Units	SI Units
E-Z	1.195×10^6 psi	8 240 MPa
E-θ	1.567×10^6 psi	10 800 MPa
G-Z	7.314×10^5 psi	5 040 MPa
ν-θZ	0.48	0.48
ν-Zθ	0.36	0.36

Effective Physical Properties	Values	
	U.S. Customary Units	SI Units
Density	0.0608 lb/in.^{3}	1 683 kg/m^3
Glass volume fraction	0.294	0.294
Glass weight fraction	0.456	0.456

M3-620 Advanced Design Example Calculations

This CLT calculation includes the effects of the unbalanced laminate sequence. The hoop and axial extensional moduli are influenced by the coupling effects in the B_{ij} matrix. The hoop and axial moduli in flexure are based on bending about the neutral axes in the x (axial) and y (hoop) directions.

The reductions of several or more plies to three plies that represents the actual in-plane and bending responses can also be referred to as smeared properties or "macros."

The woven roving layer is modeled as three unidirectional layers oriented at 0 deg and 90 deg. The thickness of these layers is proportioned with respect to the weave style (5/9 for axial and 4/9 for hoop). However, the distance z between the reference plane and the centroid of this layer is taken to the center of the total layer to prevent an unbalanced calculation of the flexural properties. The neutral axes in bending in the x and y direction are equal for this macro. Paragraph M3-640 demonstrates the macro formulation.

The filament wound layers are also input into the CLT equations as a balanced and symmetric laminate with three layers, and the resultant effective properties are then used in the subsequent CLT analysis as these layers with the calculated "smeared" properties. The neutral axes in bending in the x and y directions are equal for this macro.

The lamina input (developed from the micromechanics in paras. M3-310 and M3-320) for the laminate theory calculations are shown in Table M3-2.

ASMENORMDOC.COM : Click to view the full PDF of ASME RTP-1 2019

The following are the classical laminate theory calculations for the ABD matrices from para. M3-400:

(U.S. Customary Units)

Mechanical		ABD, lb/in., lb, in.-lb							Midsurface Strain		Thermal		Moisture
N_x	=	5.076×10^5	2.425×10^5	0.000	-5.720×10^3	1.810×10^3	0.000	×	ε_{xo}	−	N_{xt}	−	N_{xm}
N_y	=	2.425×10^5	6.657×10^5	0.000	1.810×10^3	-2.079×10^3	0.000	×	ε_{yo}	−	N_{yt}	−	N_{ym}
N_{xy}	=	0.000	0.000	2.567×10^5	0.000	0.000	1.771×10^3	×	γ_{xyo}	−	N_{xyt}	−	N_{xym}
M_x	=	-5.720×10^3	1.810×10^3	0.000	4.658×10^3	1.399×10^3	91.10	×	κ_x	−	M_{xt}	−	M_{xm}
M_y	=	1.810×10^3	-2.079×10^3	0.000	1.399×10^3	4.744×10^3	173.6	×	κ_y	−	M_{yt}	−	M_{ym}
M_{xy}	=	0.000	0.000	1.771×10^3	91.10	173.6	1.461×10^3	×	κ_{xy}	−	M_{xyt}	−	M_{xym}

Midplane Strain and Curvature		ABD Inverse, $(\text{lb/in.})^{-1}$, lb^{-1}, $(\text{in.-lb})^{-1}$							Mechanical		Thermal		Moisture
ε_{xo}	=	2.464×10^{-6}	-9.169×10^{-7}	-3.217×10^{-10}	4.153×10^{-6}	-2.568×10^{-6}	4.662×10^{-8}	×	N_x	+	N_{xt}	+	N_{xm}
ε_{yo}	=	-9.169×10^{-7}	1.849×10^{-6}	5.041×10^{-10}	-2.405×10^{-6}	1.872×10^{-6}	-7.307×10^{-8}	×	N_y	+	N_{yt}	+	N_{ym}
γ_{xyo}	=	-3.217×10^{-10}	5.041×10^{-10}	3.929×10^{-6}	4.421×10^{-8}	1.624×10^{-7}	-4.784×10^{-6}	×	N_{xy}	+	N_{xyt}	+	N_{xym}
κ_x	=	4.153×10^{-6}	-2.405×10^{-6}	4.421×10^{-8}	2.431×10^{-4}	-7.409×10^{-5}	-6.408×10^{-6}	×	M_x	+	M_{xt}	+	M_{xm}
κ_y	=	-2.568×10^{-6}	1.872×10^{-6}	1.624×10^{-7}	-7.409×10^{-5}	2.353×10^{-4}	-2.354×10^{-5}	×	M_y	+	M_{yt}	+	M_{ym}
κ_{xy}	=	4.662×10^{-8}	-7.307×10^{-8}	-4.784×10^{-6}	-6.408×10^{-6}	-2.354×10^{-5}	6.935×10^{-4}	×	M_{xy}	+	M_{xyt}	+	M_{xym}

(SI Units)

Mechanical		ABD, N/mm, N, N·mm							Midsurface Strain		Thermal		Moisture
N_x	=	8.889×10^4	4.247×10^4	0.000	-2.544×10^4	8.051×10^3	0.000	×	ε_{xo}	−	N_{xt}	−	N_{xm}
N_y	=	4.247×10^4	1.166×10^5	0.000	8.051×10^3	-9.248×10^3	0.000	×	ε_{yo}	−	N_{yt}	−	N_{ym}
N_{xy}	=	0.000	0.000	4.496×10^4	0.000	0.000	7.878×10^3	×	γ_{xyo}	−	N_{xyt}	−	N_{xym}
M_x	=	-2.544×10^4	8.051×10^3	0.000	5.263×10^5	1.581×10^5	1.029×10^4	×	κ_x	−	M_{xt}	−	M_{xm}
M_y	=	8.051×10^3	-9.248×10^3	0.000	1.581×10^5	5.360×10^5	1.961×10^4	×	κ_y	−	M_{yt}	−	M_{ym}
M_{xy}	=	0.000	0.000	7.878×10^3	1.029×10^4	1.961×10^4	1.651×10^5	×	κ_{xy}	−	M_{xyt}	−	M_{xym}

Midplane Strain and Curvature		ABD Inverse, $(\text{N/mm})^{-1}$, N^{-1}, $(\text{N·mm})^{-1}$							Mechanical		Thermal		Moisture
ε_{xo}	=	1.407×10^{-5}	-5.236×10^{-6}	-1.837×10^{-9}	9.336×10^{-7}	-5.773×10^{-7}	1.048×10^{-8}	×	N_x	+	N_{xt}	+	N_{xm}
ε_{yo}	=	-5.236×10^{-6}	1.056×10^{-5}	2.878×10^{-9}	-5.407×10^{-7}	4.208×10^{-7}	-1.643×10^{-8}	×	N_y	+	N_{yt}	+	N_{ym}
γ_{xyo}	=	-1.837×10^{-9}	2.878×10^{-9}	2.244×10^{-5}	9.939×10^{-9}	3.651×10^{-8}	-1.075×10^{-6}	×	N_{xy}	+	N_{xyt}	+	N_{xym}
κ_x	=	9.336×10^{-7}	-5.407×10^{-7}	9.939×10^{-9}	2.152×10^{-6}	-6.558×10^{-7}	-5.672×10^{-8}	×	M_x	+	M_{xt}	+	M_{xm}
κ_y	=	-5.773×10^{-7}	4.208×10^{-7}	3.651×10^{-8}	-6.558×10^{-7}	2.083×10^{-6}	-2.083×10^{-7}	×	M_y	+	M_{yt}	+	M_{ym}
κ_{xy}	=	1.048×10^{-8}	-1.643×10^{-8}	-1.075×10^{-6}	-5.672×10^{-8}	-2.083×10^{-7}	6.138×10^{-6}	×	M_{xy}	+	M_{xyt}	+	M_{xym}

ASMENORMDOC.COM : Click to view the full PDF of ASME RTP-1 2019

The following are the calculations for the ABD matrices developed from the neutral axes in the x (axial) and y (hoop) directions from para. M3-400:

ABD Matrix From Bending x Worksheet

(U.S. Customary Units)

ABD, lb/in., lb, in.-lb					
5.076×10^5	2.425×10^5	0.000	0.000	4.542×10^3	0.000
2.425×10^5	6.657×10^5	0.000	4.542×10^3	5.421×10^3	0.000
0.000	0.000	2.567×10^5	0.000	0.000	4.665×10^3
0.000	4.542×10^3	0.000	4.594×10^3	1.470×10^3	91.10
4.542×10^3	5.421×10^3	0.000	1.470×10^3	4.781×10^3	173.6
0.000	0.000	4.664×10^3	91.10	173.6	1.533×10^3

(SI Units)

ABD, N/mm, N, N·mm					
8.889×10^4	4.247×10^4	0.000	0.000	2.020×10^4	0.000
4.247×10^4	1.166×10^5	0.000	2.020×10^4	2.411×10^4	0.000
0.000	0.000	4.496×10^4	0.000	0.000	2.075×10^4
0.000	2.020×10^4	0.000	5.191×10^5	1.661×10^5	1.029×10^4
2.020×10^4	2.411×10^4	0.000	1.661×10^5	5.402×10^5	1.961×10^4
0.000	0.000	2.075×10^4	1.029×10^4	1.961×10^4	1.732×10^5

ABD Matrix From Bending y Worksheet

(U.S. Customary Units)

ABD, lb/in., lb, in.-lb					
5.014×10^5	2.082×10^5	0.000	-2.937×10^3	2.372×10^3	0.000
2.082×10^5	5.697×10^5	0.000	2.372×10^3	0.000	0.000
0.000	0.000	2.072×10^5	0.000	0.000	2.223×10^3
-2.937×10^3	2.372×10^3	0.000	4.617×10^3	1.420×10^3	0.000
2.372×10^3	0.000	0.000	1.420×10^3	4.597×10^3	0.000
0.000	0.000	2.223×10^3	0.000	0.000	1.410×10^3

(SI Units)

ABD, N/mm, N, N·mm					
8.781×10^4	3.646×10^4	0.000	-1.306×10^4	1.055×10^4	0.000
3.646×10^4	9.977×10^4	0.000	1.055×10^4	0.000	0.000
0.000	0.000	3.629×10^4	0.000	0.000	9.888×10^3
-1.306×10^4	1.055×10^4	0.000	5.217×10^5	1.604×10^5	0.000
1.055×10^4	0.000	0.000	1.604×10^5	5.194×10^5	0.000
0.000	0.000	9.888×10^3	0.000	0.000	1.593×10^5

ASMENORMDOC.COM : Click to view the full PDF of ASME RTP-1 2019

The following are the effective material properties for the laminate

Material Properties	Values: U.S. Customary Units	Values: SI Units
E_x	1.187×10^6 psi	8 180 MPa
E_y	1.549×10^6 psi	10 700 MPa
ν_{xy}	0.36	0.36
ν_{yx}	0.49	0.49
G_{xy}	7.047×10^5 psi	4 860 MPa
E_x flexural	1.142×10^6 psi	7 870 MPa
E_y flexural	1.179×10^6 psi	8 130 MPa
ν_{xy} flexural	0.30	0.30
ν_{yx} flexural	0.31	0.31
D_x flexural	4.550×10^3 lb-in.	5.141×10^5 N·mm
D_y flexural	4.701×10^3 lb-in.	5.311×10^5 N·mm
E_{sx} extensional	5.065×10^5 lb-in.	5.723×10^7 N·mm
E_{sy} extensional	6.613×10^5 lb-in.	7.472×10^7 N·mm
Mid-thickness	0.176 in.	4.47 mm
Neutral axis x	0.164 in.	4.17 mm
Neutral axis y	0.172 in.	4.37 mm

where the following assumptions have been made:

(a) Extension E_x and ν_{xy} and flexural E_x and ν_{xy} are calculated based on the neutral x axis, such that an extensional load N_x produces no curvature in the x direction, and an M_x bending load produces no x direction extension.

(b) Extensional E_y and ν_{yx} and flexural E_y and ν_{yx} are calculated based on the neutral y axis, such that an extensional load N_y produces no curvature in the y direction, and an M_y bending load produces no y-direction extension.

(c) In-plane G_{xy} is assumed to be the average of the G_{xy} calculated using the x and y neutral axes.

NOTES:

(1) These are one-dimensional values, and the full ABD matrix needs to be used for laminates that have B_{ij} terms present to determine the actual response of the laminate because of the additional coupling terms.

(2) These predicted material properties using the advanced CLT are within a few percent of those calculated using the simplified design example in para. M3-610 for the E_x (E_z) and E_y (E_θ) values.

M3-630 Stresses, Strains, and Strength Ratios Example

Using the simplified design calculation example in para. M3-610 and assuming a biaxial pressure of 10.0 psig (6.89×10^{-2} MPa) and an inside diameter of 120 in. (3 050 mm), the stresses, strains, and strength ratios are calculated; results are shown Table M3-3.

A comparison of the calculated R values shows that there is close agreement between the four strength theories.

M3-640 Macro or Smeared Property Formulation

Resin crazing is allowed in the laminate, except for the liner materials. Filament wound, unidirectional, and woven roving materials can produce an artificially low R value due to loads transverse to the fiber directions. Then, load transverse to the fiber direction may be protected due to the adjacent transverse fibers. The strength of the macro is not compromised, provided there is no fiber failure.

This example is based on the woven roving with properties as calculated in para. M3-310 and used in the design example.

The woven roving layer is modeled as a balanced and symmetric three-ply laminate as shown in Table M3-4. All the effective elastic properties and strengths per strain limits of this three-ply model can be determined as shown in this Table.

The strengths for this macro are based on the strain allowables in para. M3-310 and by discounting the strength of the transverse plies. The tensile strength in the 1 direction is the product of the strain allowable (0.020) and E_x, which is 46,900 psi (323.4 MPa). The tensile strength in the 2 direction is the product of the strain allowable (0.020) and E_y, which results in a strength of 40,520 psi (279.4 MPa). The other strengths are determined in a similar way, and the result is the following:

ASMENORMDOC.COM : Click to view the full PDF of ASME RTP-1 2019

(U.S. Customary Units)

Equivalent Macro Layer	E_{11}, psi	E_{22}, psi	ν_{12}	G_{12}, psi	t, in.	1 Tens, psi	1 Comp, psi	2 Tens, psi	2 Comp, psi	Shear, psi
24-oz/yd^2 woven roving, smeared	2.345×10^6	2.026×10^6	0.11	2.714×10^5	0.039	46,900	24,310	40,520	16,210	7,274

(SI Units)

Equivalent Macro Layer	E_{11}, MPa	E_{22}, MPa	ν_{12}	G_{12}, MPa	t, mm	1 Tens, MPa	1 Comp, MPa	2 Tens, MPa	2 Comp, MPa	Shear, MPa
810 g/m^2 woven roving, smeared	16 200	14 000	0.11	1 870	0.99	323.4	167.6	279.4	111.8	50.15

The effect of this formulation is similar to a progressive failure analysis where the transverse properties are assumed to be diminished in the original model. This is a conservative approach, as there may be no resin crazing for the design loads.

This approach also applies to unidirectional axial plies with hoop winds.

ASMENORMDOC.COM : Click to view the full PDF of ASME RTP-1 2019

(19)

Table M3-2 Lamina Input for CLT Calculations

Material	E_1	E_2	ν_{12}	G_{12}	Thickness, t [Note (1)]	α, deg
U.S. Customary Units						
c-veil	5.492×10^5 psi	5.492×10^5 psi	0.34	2.049×10^5 psi	0.013 in.	Random
1.5-oz/ft^2 mat	1.025×10^6 psi	1.025×10^6 psi	0.33	3.863×10^5 psi	0.043 in.	Random
1.5-oz/ft^2 mat	1.025×10^6 psi	1.025×10^6 psi	0.33	3.863×10^5 psi	0.043 in.	Random
Filament wound roving	5.400×10^6 psi	1.122×10^6 psi	0.28	4.025×10^5 psi	0.032 in.	54
Filament wound roving	5.400×10^6 psi	1.122×10^6 psi	0.28	4.025×10^5 psi	0.064 in.	−54
Filament wound roving	5.400×10^6 psi	1.122×10^6 psi	0.28	4.025×10^5 psi	0.032 in.	54
1.5-oz/ft^2 mat	1.025×10^6 psi	1.025×10^6 psi	0.33	3.863×10^5 psi	0.043 in.	Random
24-oz/yd^2 woven roving						
Warp direction	3.532×10^6 psi	7.476×10^5 psi	0.30	2.688×10^5 psi	0.011 in.	0
Weft direction	3.643×10^6 psi	7.641×10^5 psi	0.30	2.748×10^5 psi	0.017 in.	90
Warp direction	3.532×10^6 psi	7.476×10^5 psi	0.30	2.688×10^5 psi	0.011 in.	0
1.5-oz/ft^2 mat	1.025×10^6 psi	1.025×10^6 psi	0.33	3.863×10^5 psi	0.043 in.	Random
SI Units						
c-veil	3 790 MPa	3 790 MPa	0.34	1 410 MPa	0.33 mm	Random
450-g/m^2 mat	7 070 MPa	7 070 MPa	0.33	2 660 MPa	1.09 mm	Random
450-g/m^2 mat	7 070 MPa	7 070 MPa	0.33	2 660 MPa	1.09 mm	Random
Filament wound roving	37 200 MPa	7 740 MPa	0.28	2 780 MPa	0.81 mm	54
Filament wound roving	37 200 MPa	7 740 MPa	0.28	2 780 MPa	1.61 mm	−54
Filament wound roving	37 200 MPa	7 740 MPa	0.28	2 780 MPa	0.81 mm	54
450-g/m^2 mat	7 070 MPa	7 070 MPa	0.33	2 660 MPa	1.09 mm	Random
810-g/m^2 woven roving						
Warp direction	24 400 MPa	5 160 MPa	0.30	1 850 MPa	0.28 mm	0
Weft direction	25 100 MPa	5 270 MPa	0.30	1 900 MPa	0.43 mm	90
Warp direction	24 400 MPa	5 160 MPa	0.30	1 850 MPa	0.28 mm	0
450-g/m^2 mat	7 070 MPa	7 070 MPa	0.33	2 660 MPa	1.09 mm	Random

NOTE: (1) Total thickness for all layers in the design example laminate = 0.351 in. (8.92 mm).

ASMENORMDOC.COM : Click to view the full PDF of ASME RTP-1 2019

(19) **Table M3-3 Strains, Stresses, and Strength Ratios**

	c-veil	1.5-oz/ft^2 (450-g/m^2) Mat	24-oz/yd^2 (810-g/m^2) Woven Roving		Filament Wound Roving
			Weft Direction	Warp Direction	
Strains, in./in. or mm/mm					
Material axes					
ε_1	1.90×10^{-4}	1.90×10^{-4}	1.90×10^{-4}	1.90×10^{-4}	1.90×10^{-4}
ε_2	8.30×10^{-4}	8.30×10^{-4}	8.30×10^{-4}	8.30×10^{-4}	8.30×10^{-4}
ε_{12}	0.00	0.00	0.00	0.00	0.00
Structural axes					
ε_x	1.90×10^{-4}	1.90×10^{-4}	1.90×10^{-4}	1.90×10^{-4}	6.10×10^{-4}
ε_y	8.30×10^{-4}	8.30×10^{-4}	8.30×10^{-4}	8.30×10^{-4}	4.10×10^{-4}
ε_{xy}	0.00	0.00	0.00	0.00	6.10×10^{-4}
Stresses, psi (MPa)					
Material axes					
σ_1	296.2 (2.042)	534.7 (3.687)	346.1 (2.386)	891.2 (6.145)	1,407 (9.701)
σ_2	557.0 (3.840)	1,026 (7.074)	3,130 (21.58)	678.0 (4.675)	2,741 (18.90)
σ_{12}	0.000	0.000	0.000	0.000	1,264 (8.715)
Structural axes					
σ_x	296.2 (2.042)	534.7 (3.687)	3,130 (21.58)	891.2 (6.145)	3,483 (24.01)
σ_y	557.0 (3.840)	1,026 (7.074)	346.1 (2.386)	678.0 (4.675)	665.4 (4.588)
σ_{xy}	0.000	0.000	0.000	0.000	243.6 (1.680)
Strength Calculations					
X_T, psi (MPa)	8,238 (56.80)	15,380 (106.0)	72,860 (502.4)	70,650 (487.1)	108,000 (744.6)
X_C, psi (MPa)	10,980 (75.70)	20,510 (141.3)	43,710 (301.4)	42,390 (292.3)	64,800 (446.8)
Y_T, psi (MPa)	8,238 (56.80)	15,380 (106.0)	1,146 (7.901)	1,121 (7.730)	1,682 (11.60)
Y_C, psi (MPa)	10,980 (75.70)	20,510 (141.3)	6,113 (42.15)	5,981 (41.24)	8,973 (61.87)
S, psi (MPa)	5,491 (37.86)	10,350 (71.36)	7,366 (50.79)	7,203 (49.66)	10,790 (74.39)
F_{xx}, 1/psi^2 (1/MPa^2)	1.105×10^{-8} (2.324×10^{-4})	3.171×10^{-9} (6.671×10^{-5})	$3{,}140 \times 10^{-10}$ (6.605×10^{-6})	3.339×10^{-10} (7.024×10^{-6})	1.429×10^{-10} (3.006×10^{-6})
F_{xy}, 1/psi^2 (1/MPa^2)	-5.526×10^{-9} (-1.162×10^{-4})	-1.586×10^{-9} (-3.336×10^{-5})	-3.347×10^{-9} (-7.041×10^{-5})	-3.528×10^{-9} (-7.422×10^{-5})	-1.538×10^{-9} (-3.235×10^{-5})
F_{yy}, 1/psi^2 (1/MPa^2)	1.105×10^{-8} (2.324×10^{-4})	3.171×10^{-9} (6.671×10^{-5})	1.427×10^{-7} (3.002×10^{-3})	1.491×10^{-7} (3.136×10^{-3})	6.624×10^{-8} (1.393×10^{-3})
F_{ss}, 1/psi^2 (1/MPa^2)	3.317×10^{-8} (6.978×10^{-4})	9.329×10^{-9} (1.962×10^{-4})	1.843×10^{-8} (3.877×10^{-4})	1.927×10^{-8} (4.054×10^{-4})	8.596×10^{-9} (1.808×10^{-4})
F_x, 1/psi (1/MPa)	3.035×10^{-5} (4.402×10^{-3})	1.626×10^{-5} (2.358×10^{-3})	-9.150×10^{-6} (-1.327×10^{-3})	-9.437×10^{-6} (-1.369×10^{-3})	-6.173×10^{-6} (-8.953×10^{-4})
F_y, 1/psi (1/MPa)	3.035×10^{-5} (4.402×10^{-3})	1.626×10^{-5} (2.358×10^{-3})	7.089×10^{-4} (1.028×10^{-1})	7.245×10^{-4} (1.051×10^{-1})	4.829×10^{-4} (7.004×10^{-2})
G	2.575×10^{-3}	2.507×10^{-3}	1.292×10^{-2}	6.455×10^{-2}	2.444×10^{-2}
H	2.589×10^{-2}	2.538×10^{-2}	2.167×10^{-1}	4.829×10^{-1}	2.998×10^{-1}
Strength Ratios					
R, Compcyl	15.3	15.5	3.77	1.69	2.73
R, Advanced CLT	14.6	14.9	3.69	1.74	2.72
R, Trilam	16.7	16.0	4.04	1.73	2.85
R fiber	27.8	28.8	23.3	79.3	31.0
R matrix	14.8	15.0	3.31	1.65	2.52

ASMENORMDOC.COM : Click to view the full PDF of ASME RTP-1 2019

(19)

Table M3-4 Woven Roving Layer Modeled as a Balanced and Symmetric Three-Ply Laminate

Material (Top to Bottom)	E_1, psi	E_2, psi	ν_{12}	G_{12}, psi	t, in.	α, deg	1 Tens, psi	1 Comp, psi	2 Tens, psi	2 Comp, psi	Shear, psi
U.S. Customary Units											
24-oz/yd^2 woven roving, axial	3.532×10^6	7.476×10^5	0.30	2.688×10^5	0.011	0	70,650	42,390	1,121	5,981	7,203
24-oz/yd^2 woven roving, hoop	3.643×10^6	7.641×10^5	0.30	2.748×10^5	0.017	90	72,860	43,710	1,146	6,113	7,366
24-oz/yd^2 woven roving, axial	3.532×10^6	7.476×10^5	0.30	2.688×10^5	0.011	0	70,650	42,390	1,121	5,981	7,203

Mechanical		ABD, lb/in., lb, in.-lb							Midsurface Strain		Thermal		Moisture
N_x	=	9.249×10^4	9.064×10^3	0.000	0.000	0.000	0.000	×	ε_{xo}	−	N_{xt}	−	N_{xm}
N_y	=	9.064×10^3	7.990×10^4	0.000	0.000	0.000	0.000	×	ε_{yo}	−	N_{yt}	−	N_{ym}
N_{xy}	=	0.000	0.000	1.059×10^4	0.000	0.000	0.000	×	γ_{xyo}	−	N_{xyt}	−	N_{xym}
M_x	=	0.000	0.000	0.000	16.65	1.142	0.000	×	κ_x	−	M_{xt}	−	M_{xm}
M_y	=	0.000	0.000	0.000	1.142	4.977	0.000	×	κ_y	−	M_{yt}	−	M_{ym}
M_{xy}	=	0.000	0.000	0.000	0.000	0.000	1.331	×	κ_{xy}	−	M_{xyt}	−	M_{xym}

Midplane Strain and Curvature		ABD Inverse, (lb/in.)$^{-1}$, lb^{-1}, (in.-lb)$^{-1}$							Mechanical		Thermal		Moisture
ε_{xo}	=	1.093×10^{-5}	-1.240×10^{-6}	0.000	0.000	0.000	0.000	×	N_x	+	N_{xt}	+	N_{xm}
ε_{yo}	=	-1.240×10^{-6}	1.266×10^{-5}	0.000	0.000	0.000	0.000	×	N_y	+	N_{yt}	+	N_{ym}
γ_{xyo}	=	0.000	0.000	9.443×10^{-5}	0.000	0.000	0.000	×	N_{xy}	+	N_{xyt}	+	N_{xym}
κ_x	=	0.000	0.000	0.000	6.102×10^{-2}	-1.400×10^{-2}	0.000	×	M_x	+	M_{xt}	+	M_{xm}
κ_y	=	0.000	0.000	0.000	-1.400×10^{-2}	2.041×10^{-1}	0.000	×	M_y	+	M_{yt}	+	M_{ym}
κ_{xy}	=	0.000	0.000	0.000	0.000	0.000	7.513×10^{-1}	×	M_{xy}	+	M_{xyt}	+	M_{xym}

Effective Mechanical Properties (Classical) [Note (1)]		Effective Mechanical Properties (Axisymmetric, $B_{ij} = 0$)
$E_x = 2.345 \times 10^6$ psi	E_x flex $= 3.315 \times 10^6$ psi	$E_x = 2.345 \times 10^6$ psi
$E_y = 2.026 \times 10^6$ psi	E_y flex $= 9.910 \times 10^5$ psi	$E_y = 2.026 \times 10^6$ psi
$\nu_{xy} = 0.11$	ν_{xy} flex $= 0.23$	$\nu_{xy} = 0.11$
$\nu_{yx} = 0.10$	ν_{yx} flex $= 0.07$	$\nu_{yx} = 0.10$
$G_{xy} = 2.714 \times 10^5$ psi	G_{xy} flex $= 2.693 \times 10^5$ psi	$G_{xy} = 2.714 \times 10^5$ psi

ASMENORMDOC.COM : Click to view the full PDF of ASME RTP-1 2019

Table M3-4 Woven Roving Layer Modeled as a Balanced and Symmetric Three-Ply Laminate (Cont'd)

Material (Top to Bottom)	E_1, MPa	E_2, MPa	ν_{12}	G_{12}, MPa	t, mm	α, deg	1 Tens, MPa	1 Comp, MPa	2 Tens, MPa	2 Comp, MPa	Shear, MPa
					SI Units						
810-g/m^2 woven roving, axial	24,400	5,160	0.30	1,850	0.28	0	487.1	292.2	7.729	41.24	49.66
810-g/m^2 woven roving, hoop	25,100	5,270	0.30	1,900	0.43	90	502.4	301.4	7.901	42.15	50.79
810-g/m^2 woven roving, axial	24,400	5,160	0.30	1,850	0.28	0	487.1	292.2	7.729	41.24	49.66

Mechanical		ABD, N/mm, N, N·mm							Midsurface Strain		Thermal		Moisture
N_x	=	1.620×10^4	1.587×10^3	0.000	0.000	0.000	0.000	×	ε_{xo}	−	N_{xt}	−	N_{xm}
N_y	=	1.587×10^3	1.399×10^4	0.000	0.000	0.000	0.000	×	ε_{yo}	−	N_{yt}	−	N_{ym}
N_{xy}	=	0.000	0.000	1.855×10^3	0.000	0.000	0.000	×	γ_{xyo}	−	N_{xyt}	−	N_{xym}
M_x	=	0.000	0.000	0.000	1.881×10^3	129.0	0.000	×	κ_x	−	M_{xt}	−	M_{xm}
M_y	=	0.000	0.000	0.000	129.0	562.3	0.000	×	κ_y	−	M_{yt}	−	M_{ym}
M_{xy}	=	0.000	0.000	0.000	0.000	0.000	150.4	×	κ_{xy}	−	M_{xyt}	−	M_{xym}

Midplane Strain and Curvature		ABD Inverse, (N/mm)$^{-1}$, N^{-1}, (N·mm)$^{-1}$							Mechanical		Thermal		Moisture
ε_{xo}	=	6.241×10^{-5}	-7.081×10^{-6}	0.000	0.000	0.000	0.000	×	N_x	+	N_{xt}	+	N_{xm}
ε_{yo}	=	-7.081×10^{-6}	7.229×10^{-5}	0.000	0.000	0.000	0.000	×	N_y	+	N_{yt}	+	N_{ym}
γ_{xyo}	=	0.000	0.000	5.392×10^{-4}	0.000	0.000	0.000	×	N_{xy}	+	N_{xyt}	+	N_{xym}
κ_x	=	0.000	0.000	0.000	5.401×10^{-4}	-1.239×10^{-4}	0.000	×	M_x	+	M_{xt}	+	M_{xm}
κ_y	=	0.000	0.000	0.000	-1.239×10^{-4}	1.806×10^{-3}	0.000	×	M_y	+	M_{yt}	+	M_{ym}
κ_{xy}	=	0.000	0.000	0.000	0.000	0.000	6.647×10^{-3}	×	M_{xy}	+	M_{xyt}	+	M_{xym}

Effective Mechanical Properties (Classical) [Note (1)]		Effective Mechanical Properties (Axisymmetric, B_{ij} = 0)
E_x = 16 200 MPa	E_x flex = 22 900 MPa	E_x = 16 200 MPa
E_y = 14 000 MPa	E_y flex = 6 830 MPa	E_y = 14 000 MPa
ν_{xy} = 0.11	ν_{xy} flex = 0.23	ν_{xy} = 0.11
ν_{yx} = 0.10	ν_{yx} flex = 0.07	ν_{yx} = 0.10
G_{xy} = 1 870 MPa	G_{xy} flex = 1 860 MPa	G_{xy} = 1 870 MPa

NOTE: (1) Except for E_x flex, E_y flex, and ν_{xy} flex, the values are incorrect for unbalanced lay-ups.

ASMENORMDOC.COM : Click to view the full PDF of ASME RTP-1 2019

MANDATORY APPENDIX M-4
QUALITY CONTROL PROGRAM

M4-100 GENERAL

(a) The Fabricator shall have and maintain a Quality Control Program that will ensure that all of the requirements of this Standard and any other applicable documents, as agreed between the Fabricator and the User, will be met.

(b) The Fabricator shall maintain a program suitable for the scope and detail of the work performed, and the size and complexity of the Fabricator's organization, and shall designate a Certified Individual (see para. 1-400). A written description of the program shall be available for review.

(c) A copy of the Fabricator's Quality Control Manual shall be made available to the Inspector on request. The Fabricator's Quality Control Manual may contain proprietary information and procedures. No copies of the Fabricator's Quality Control Manual shall be removed from the Fabricator's premises without the Fabricator's express permission. This security permission does not apply to quality control forms and checklists that may be a portion of the Quality Control Manual and are necessary to be used during fabrication to check the fabrication process. These quality control forms become attachments to the Fabricator's Data Report (see Form 1-2).

M4-200 ORGANIZATION

The Quality Control Program shall include the Fabricator's organization chart, which indicates reporting responsibility and authority. The purpose of this chart is to identify and associate the various organizational groups with the particular function for which they are responsible. The organization chart showing the relationship between management and engineering, purchasing, fabrication, inspection, and quality control is required to reflect the actual organization. This Standard does not intend to encroach on the Fabricator's right to establish and to alter whatever form of organization the Fabricator desires, as long as it is appropriate to fulfill the work within this Standard. This chart shall illustrate that the quality control function is independent of the production group and marketing group.

M4-300 DOCUMENTATION (19)

(a) The Quality Control Program shall include as a minimum the records required by this Standard. These records shall be organized in one place and readily available while fabrication is in progress.

(b) The Quality Control Program shall provide for incorporation of procedures that will ensure that the latest applicable drawings, design calculations, and specifications are used for fabrication, inspection, and testing.

(c) Records shall be retained by the Fabricator for a minimum of 5 yr.

M4-400 QUALITY CONTROL

The Quality Control Program shall include specific procedures for the following:

(a) inspection of received goods, including raw materials and purchased items, i.e., any materials that will become part of the finished vessel.

(b) in-process inspection of resin mixing, raw material dispersion, component fabrication, and assembly procedures, including verification of reinforcing sequence (refer to Parts 4 and 6 of this Standard).

(c) scheduling and notification for Inspector's hold points and final acceptance inspection. Refer to paras. 6-300, 1-400, 1-430, and 1-440. Typical inspection events are given in Tables NM7-1 and NM7-2.

(d) inspection of the finished vessel (refer to Parts 4 and 6).

(e) rectifying nonconformities or imperfections that shall be done in accordance with Mandatory Appendix M-7 and shall be recorded on forms included in the Fabricator's Quality Control Program. Minimum data to be recorded shall be date of correction, specific location on the vessel, description of nonconformity or imperfection, method of correction, name of qualified Laminator or Secondary Bonder who made the correction, and signature approvals for each correction in accordance with Mandatory Appendix M-7 and the Fabricator's Quality Control Program.

(f) maintenance and calibration of all inspection and test equipment.

(g) internal audits of the Quality Control Program. The Certified Individual shall perform the internal audits at the frequency specified in the QC Manual. The maximum interval between audits shall be 14 months (although

ASMENORMDOC.COM : Click to view the full PDF of ASME RTP-1 2019

6-month intervals are recommended). The first audit shall occur no more than 1 yr from the date of issuance of the Certificate of Authorization.

(h) assurance that the RTP-1 nameplate information meets the requirements of the UBRS and para. 1-540.

M4-500 EXAMPLE OF A FABRICATOR'S QUALITY CONTROL PROGRAM

An example of a Fabricator's Quality Control Program is included in Nonmandatory Appendix NM-6.

ASMENORMDOC.COM : Click to view the full PDF of ASME RTP-1 2019

MANDATORY APPENDIX M-5
QUALIFICATION OF LAMINATORS AND SECONDARY BONDERS

(19) **M5-100 GENERAL REQUIREMENTS**

(a) This Appendix specifies the rules for qualifying personnel to produce laminates and/or perform secondary bonding operations. Laminates and overlays thereof (secondary bonds) shall only be made by personnel who have been qualified in accordance with the rules of this Appendix.

(b) A *Laminator* is an individual actively engaged (continually present and possessing full control over the process) in producing laminates. This is not to preclude assistance being provided to the Laminator by one to four assistants.

(c) A *Secondary Bonder* is an individual who is actively engaged in joining and overlaying cured subassemblies of the vessel being fabricated. This is not to preclude assistance being provided to the Secondary Bonder by one or two assistants.

(d) The Fabricator shall maintain up-to-date records relating to qualification of each Laminator and Secondary Bonder. These records will document the date of last qualification and will include all calculations and test or inspection reports from both internal and independent laboratory testing programs used in the process of qualification. These records are subject to review on request by all parties engaged in the process of procurement or inspection.

M5-200 RESPONSIBILITY

It is the responsibility of the Fabricator to train and qualify Laminators and Secondary Bonders.

M5-300 QUALIFICATION OF LAMINATORS

(a) Laminators may qualify their capabilities at the time a Fabricator produces a demonstration laminate for the purpose of shop qualification.

(b) To qualify, a Laminator must produce one Type II demonstration laminate (see Part 7), fabricated of any polyester or vinyl ester resin, which upon test in accordance with the instructions in Part 7 fulfills the requirements of this Standard. A Laminator Qualification Report, Form M5-1, shall be completed and signed for each laminator qualification.

(c) All laminates made for qualification shall be identified in accordance with para. 7-900.

(d) Laminators shall be requalified if inactive for 6 months.

(e) The Certified Individual may require requalification of a Laminator at any time if there is cause to question the Laminator's ability to produce laminates in accordance with the requirements of this Standard.

M5-400 QUALIFICATION OF SECONDARY BONDERS

(a) Secondary Bonders must qualify their capabilities in accordance with the procedures that follow:

(b) It is the responsibility of the Fabricator's Quality Control Manager to

(1) ensure compliance with procedures as outlined for the preparation and machining of test samples.

(2) make or supervise the making of circumference measurements.

(3) make, sign, and date a Secondary Bonder Qualification Report; see Form M5-2. Attached to the Secondary Bonder Qualification Report shall be copies of a Component Data Sheet, including all items listed in Form NM6-2. Two Component Data Sheets are required, one for the pipe test piece, the second for the overlay. The Component Data Sheets shall be appropriately identified.

M5-410 Making Pipe Test Pieces

(a) Three pipe test pieces shall be made by a qualified Laminator utilizing brightly pigmented polyester or vinyl ester resin.

(b) The resin must be one that the Fabricator has qualified through the production of a demonstration laminate.

(c) Refer to Figure M5-1 for dimensions of pipe test pieces.

(d) The Laminator shall apply a nonpigmented, paraffinated top coat to the pipe exterior.

(e) After lamination, application of paraffinated top coat, and cure, the pipe test pieces must be aged at 70°F (21°C) to 80°F (27°C) for at least 72 hr before the Secondary Bonder may begin to make overlays.

M5-420 Making Secondary Bond Test Assemblies

(a) The Secondary Bonder must overlay three pipe test pieces to make three secondary bond test assemblies as illustrated in Figure M5-2.

ASMENORMDOC.COM : Click to view the full PDF of ASME RTP-1 2019

(b) The Secondary Bonder shall prepare the pipe test pieces for overlay per para. 4-320(a). Care should be taken to maintain an even surface and constant circumference, avoiding removal of excess material that would result in grooves, tapers, or flat spots.

(c) After preparation for overlay, the circumference of the area to be overlayed shall be measured using a metal tape measure at the points indicated in Figure M5-1. This must be done for each of the three pipe test pieces to be overlayed. Measurements must be made in accordance with para. M5-400(b)(2). Measurement accuracy shall be ±$^1/_{16}$ in. (±1.5 mm) and rounded to the nearest $^1/_{16}$ in. (1.5 mm).

(d) For each of three pipe test pieces, the two circumference measurements shall be recorded in the Secondary Bonder Qualification Report. When recording measurements, express the values as the decimal equivalents of the measurements taken. Calculate the average of the two circumference measurements and round it off to the nearest hundredth of an inch (0.2 millimeter); this value is C_a. The value of C_a shall be recorded in the report and also marked in $^1/_2$-in. to $^3/_4$-in. (13 mm to 19 mm) size numerals, with a black indelible marker, at each end of a pipe test piece. See Figure M5-1 for approximate locations where the average circumference value, C_a, is to be marked on each pipe test piece.

(e) The Secondary Bonder shall then overlay the three pipe test pieces, following instructions in paras. 4-320(b) through (d), so as to make secondary bond test assemblies as shown in Figure M5-2. Nonpigmented resin is to be used.

M5-430 Making and Measuring Secondary Bond Test Specimens

(a) After the overlay is cured, and cure is verified per the instructions in para. 6-910, machine the secondary bond test assemblies to make secondary bond test specimens in accordance with Figure M5-3.

(b) Each secondary bond test assembly makes two secondary bond test specimens when cut on the centerline of the overlay.

(c) A minimum of five secondary bond test specimens are required to be made for testing.

(d) Machining operations may be done by the Fabricator, at another firm or location, or at an independent testing laboratory.

M5-440 Testing Secondary Bond Test Specimens and Calculating Secondary Bond Shear Strength

(a) When machining is complete, five secondary bond test specimens must be tested by an independent testing laboratory.

(b) Prior to testing, the average engagement height of the shear collar must be determined for each secondary bond test specimen.

(c) Measurements and calculations to determine the average engagement height of the shear collar must be done at the independent testing laboratory where the test specimens are to be tested.

(d) To determine the average engagement height, H_a, for each test specimen, proceed as follows:

(1) Refer to Figure M5-3.

(2) Using a vernier caliper, make three measurements of the shear collar height, L, at approximately 120-deg intervals and record the measurements in the Secondary Bonder Qualification Report. The average of the three measurements, L_a, shall be calculated; the value shall be rounded off to the nearest hundredth of an inch (0.2 millimeter), recorded in the report, and also marked on each test specimen in approximately the area shown in Figure M5-3. Refer to para. M5-420(d) for marking requirements. Measurement accuracy shall be ±0.010 in. (0.25 mm).

(3) Using a vernier caliper with a depth slide, make three measurements of the relief bore depth, D, at approximately 120-deg intervals. Follow the same general procedures as in the preceding paragraph for recording measurements; averaging and rounding data to arrive at the average relief bore depth, D_a; and marking the specimen. Measurement accuracy shall be ±0.010 in. (0.25 mm).

(4) Calculate the engagement height, H_a, for each test specimen as follows:

$$H_a = L_a - D_a$$

Record the values of H_a in the Secondary Bonder Qualification Report and mark them on the test specimens in accordance with previous instructions. Testing of specimens may now commence.

(e) Specimens must be tested in compression in a laboratory testing machine such that the secondary bond area under the shear collar fails in shear. The crosshead speed shall be 0.05 in./min (1.3 mm/min).

(f) Peak load, P, is to be recorded for each specimen, rounded off to the nearest 200 lb (890 N).

(g) Secondary bond shear strength, S_B, is to be calculated for each test specimen as follows:

$$S_B = \frac{P}{C_a \times H_a} \text{ lb/in.}^2 \text{(MPa)}$$

where

C_a = average circumference of test specimen, in. (mm)
H_a = average engagement height, in. (mm)
P = peak load at failure, lb (N)

ASMENORMDOC.COM : Click to view the full PDF of ASME RTP-1 2019

(19)

Form M5-1 Laminator Qualification Report

Data by Fabricator:

Fabricator _____ Laminator _____

Address _____ Last qualification date _____

_____ Lamination date _____

_____ Quality Control Manager _____

Fabrication process _____ Resin type _____

Laminate type _____ Catalyst type _____

Data by Test Laboratory:

Test laboratory _____ Test report no. _____

Lab technician _____ Testing date _____

Specimen Number	Specimen Thickness	Specimen Width	Test Speed	Peak Load	S_x	S_y	E_x	E_y
1								
2								
3								
4								
5								
				Average				

Type II laminates require properties in the warp direction only.

Test laboratory representative _____ Date _____
(signature)

Certification:

The Laminator whose name appears above is qualified under the provisions of RTP-1, Part 7 and Mandatory Appendix M-5.

Quality Control Manager _____ Date _____
(signature)

Laminator _____ Date _____
(signature)

GENERAL NOTES:
(a) This form may be reproduced and used without written permission from ASME if used for purposes other than republication.
(b) Attach copies of Table NM6-2 (Component Data Sheet) and laboratory test report to this Laminator Qualification Report.

ASMENORMDOC.COM : Click to view the full PDF of ASME RTP-1 2019

(19)

Form M5-2 Secondary Bonder Qualification Report

Fabricator _____ Secondary Bonder _____

Address _____ Last qualification date _____

_____ Secondary bonding date _____

Quality Control Manager _____ Test laboratory _____

Qualified Laminator _____ Lab technician _____

Pipe fabrication date _____ Testing date _____

Data by Fabricator:

Specimen Number	Pipe Circumferences		
	C_1	C_2	C_a

$H_a = L_a - D_a$

$S_b = \frac{P}{C_a H_a}$ [minimum allowable = 2,000 psi (13.8 MPa)]

Data by Test Laboratory:

Test laboratory representative _____ Date _____

(signature)

Specimen Number	Shear Collar Height				Relief Bore Depth				Shear Height	Peak Load	Shear Strength
	L_1	L_2	L_3	L_a	D_1	D_2	D_3	D_a	H_a	P	S_b

The following certify that they have executed their responsibilities and tests in accordance with the requirements of ASME RTP-1, para. M5-400:

Secondary Bonder _____ Date _____

(signature)

Quality Control Manager _____ Date _____

(signature)

Secondary Bonder ☐ is qualified ☐ is not qualified

GENERAL NOTES:

(a) This form may be reproduced and used without written permission from ASME if used for purposes other than republication.

(b) Attach copies of Table NM6-2 (Component Data Sheet) to this Secondary Bonder Qualification Report. One Component Sheet is to apply to the pipe test piece per Fig. M5-1; the other is to apply to the overlay per Fig.M5-2. Identify each Component Data Sheet accordingly.

ASMENORMDOC.COM : Click to view the full PDF of ASME RTP-1 2019

Figure M5-1 Pipe Test Piece

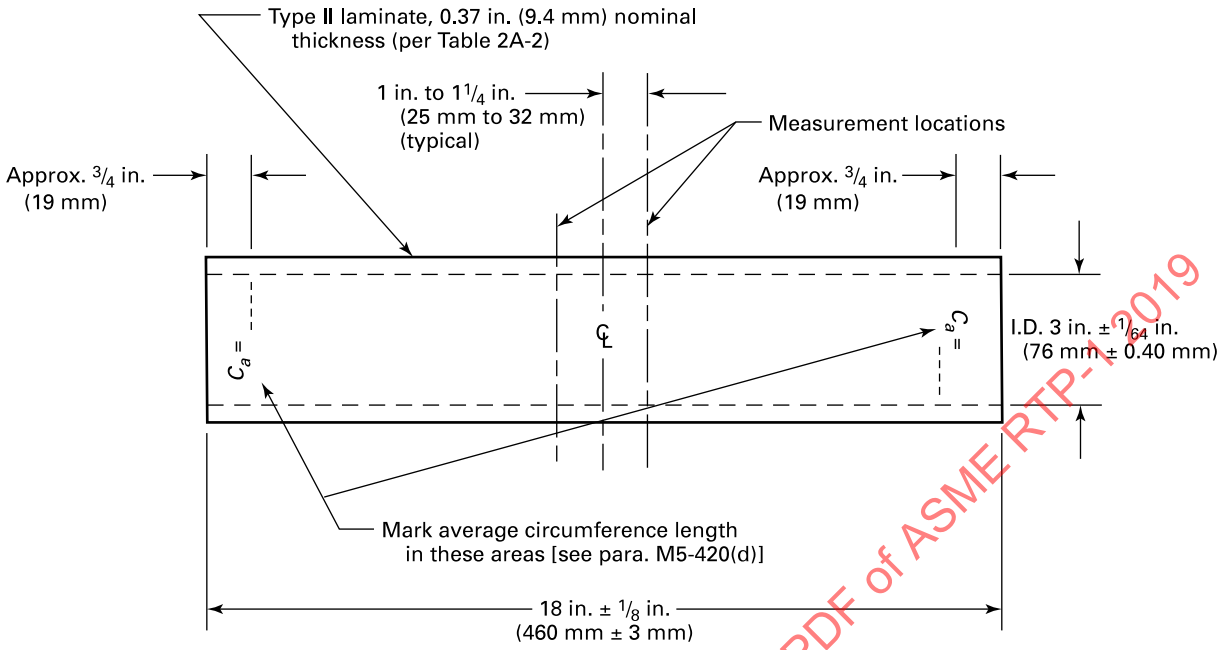

Figure M5-2 Secondary Bond Test Assembly

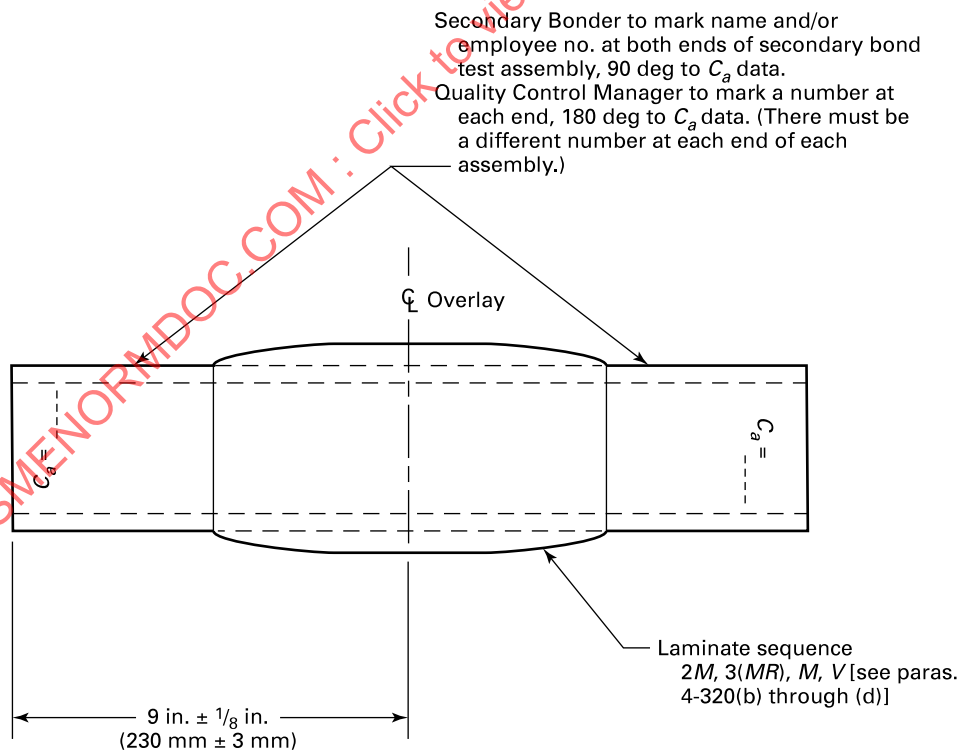

ASMENORMDOC.COM : Click to view the full PDF of ASME RTP-1 2019

Figure M5-3 Secondary Bond Test Specimen

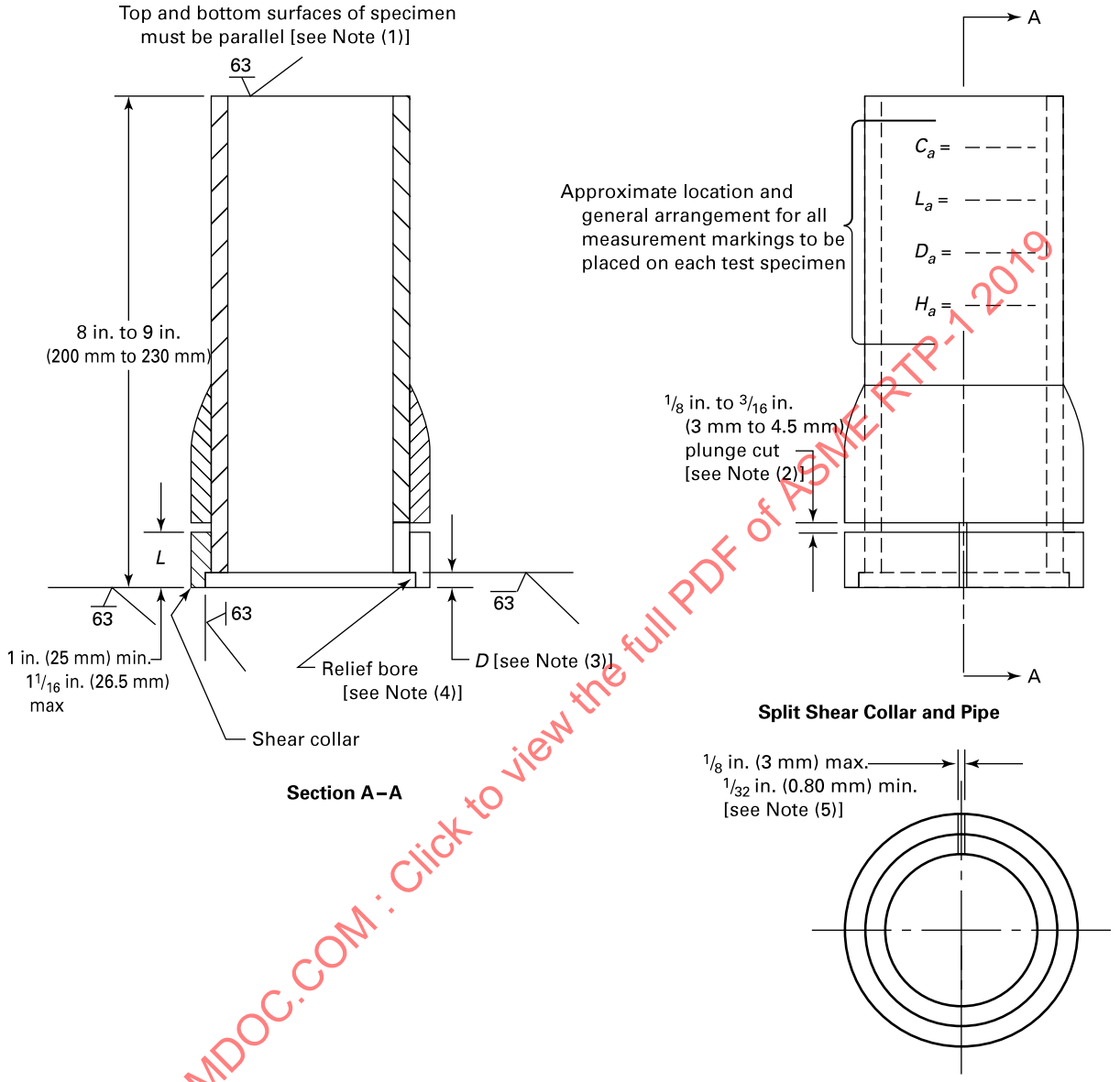

GENERAL NOTE: ✓ indicates machine lathe finish.

NOTES:
(1) Lack of parallelism may reduce test values.
(2) Plunge cut with squared nose parting tool to depth sufficient to expose pigmented laminate a full 360 deg and over total surface root of slot.
(3) Machine back pipe ¼ in. (6 mm) minimum 5/16 in. (8 mm) maximum.
(4) Machine away internal surface of shear collar to be outboard of pipe external surface 3/32 in. (2.5 mm) minimum, a full 360 deg.
(5) Slit must extend completely through the wall of the shear collar (and pipe) and be of length sufficient to protrude fully into the plunge cut slot.

ASMENORMDOC.COM : Click to view the full PDF of ASME RTP-1 2019

(h) The independent testing laboratory shall calculate and report the values of secondary bond shear strength for each test specimen tested.

M5-450 Requirements for Qualification of Secondary Bonders

(a) The secondary bond shear strength of all specimens tested must be greater than or equal to 2,000 psi (13.8 MPa). Should any sample tested fail to achieve a secondary bond shear strength of 2,000 psi (13.8 MPa), a complete lot of six new samples must be made and five of these tested, so that all five retest samples achieve 2,000 psi (13.8 MPa) minimum shear value.

(b) Secondary Bonders shall be requalified if inactive for 6 months.

(c) The Certified Individual may require requalification of a Secondary Bonder at any time if there is cause to question the Secondary Bonder's ability to produce secondary bonds in accordance with the requirements of this Standard.

ASMENORMDOC.COM : Click to view the full PDF of ASME RTP-1 2019

MANDATORY APPENDIX M-6 DEMONSTRATION VESSEL

M6-100 GENERAL

Fabricators shall design, fabricate, and satisfactorily test a demonstration vessel in accordance with the instructions contained in this Appendix.

The design and fabrication of the demonstration vessel require a comprehensive understanding of this Standard by the Fabricator. These involve a full demonstration of the Fabricator's ability to design, execute drawings, qualify demonstration laminates, establish design values from design basis laminates, qualify Laminators and Secondary Bonders, and fabricate under effective overview of the Fabricator's Quality Control Program, all in full accordance with the requirements of this Standard.

No Fabricator shall claim qualification to fabricate to this Standard until having satisfactorily completed and tested the demonstration vessel in accordance with the instructions herein.

M6-200 PRELIMINARY REQUIREMENTS

Prior to designing or constructing the demonstration vessel, the Fabricator shall complete all of the following requirements:

(a) The Fabricator shall have developed a written Quality Control Program in full accordance with the requirements of Mandatory Appendix M-4. Demonstration of the effectiveness of the program is suggested on several jobs in the shop prior to construction of the demonstration vessel.

(b) The Fabricator shall have constructed and shall have successfully completed testing of demonstration laminates and design basis laminates of those laminate types and that resin specified by the UBRS for the demonstration vessel (see Part 7 for requirements of demonstration laminates).

(c) The Fabricator shall have trained and qualified those Laminators and Secondary Bonders who will construct the demonstration vessel (see Mandatory Appendix M-5).

M6-300 DESIGN, FABRICATION, AND TESTING OF THE DEMONSTRATION VESSEL

Design and drafting requirements shall be demonstrated by the Fabricator in full accordance with this Standard.

All instructions for fabrication and testing of the demonstration vessel are contained in the UBRS identified as Table M6-1 (see Figure M6-1).

M6-400 REQUIREMENTS SUBSEQUENT TO TESTING

(a) Subsequent to completion of successful testing, the Fabricator shall section (cut) the demonstration vessel to reveal details and the integrity of laminates and secondary bonds. Instructions for sectioning are included in the UBRS (see Figure M6-2). The Fabricator may polish or grind the cut edges, but no resin, resin putty, or any other material is to be applied to such cut edges.

(b) The *quadrant* sectioned from the demonstration vessel may be retained or disposed of by the Fabricator, at the Fabricator's option.

(c) The three-quarter section from the demonstration vessel shall be placed on display at the Fabricator's shop for viewing by prospective customers. No paints, coloration, or pigmentation shall be applied to the demonstration vessel.

(d) Subsequent to the completion of successful testing, the Fabricator shall execute a Fabricator's Data Report (see Form 1-2). Attached to the Data Report shall be all information required by the Data Report, plus the following additional items:

(1) a copy of the Witness of Hydrotest form (see Figure M6-3)

(2) certified test reports of all required demonstration and design basis laminates [see para. M6-200(b)]

(3) certified test reports covering the qualification of Laminators and Secondary Bonders [see para. M6-200(c) and Mandatory Appendix M-3]

(4) a photograph of the sectioned demonstration vessel

All of the above shall be organized and bound as a single document. The Fabricator may reproduce as many copies of this document as desired.

ASMENORMDOC.COM : Click to view the full PDF of ASME RTP-1 2019

(e) At least one copy of the document described in (d) above shall be available at the place of display of the demonstration vessel.

ASMENORMDOC.COM : Click to view the full PDF of ASME RTP-1 2019

(19) **Table M6-1 User's Basic Requirements Specification (UBRS) (As Required by the Provisions of ASME RTP-1)**

Page 1 of 4

RTP Edition No._____

UBRS Revision No._____

User firm name For display at Fabricator's shop

User's Agent firm name Not applicable

Title of equipment ASME RTP-1 demonstration vessel

User's designation no. ASME RTP-1 A1

Installation location (name and address) Fabricator's shop

UBRS prepared by (User or User's Agent):

Name Mandatory Appendix M-6, ASME RTP-1 Phone no. Not applicable Date 3/8/02

Address

1. Equipment description (equipment sketch and nozzle schedule must be attached):

   Storage vessel

2. Additional Fabricator responsibilities:

   [ ] Special requirements

   [ ] Acoustic emission testing

   [x] Inspection or testing requirements not listed in the Standard A special hydrotest shall be performed, fully flooded (all air vented off). Water shall be ambient temperature. An acceptable Hydrostatic Proof test shall be in the range of 44.0 psig–46.0 psig (303 kPa – 317 kPa). Test shall be witnessed by a Qualified Designer. The Witness of Hydrotest form (Fig. M6-3) shall be completed.

   [ ]

   [ ]

   [ ] Visual inspection acceptance level (refer to Table 6-1 of ASME RTP-1):

   [ ] Level 1

   [x] Level 2

   Quantity limitations for gaseous air bubbles or blisters

ASMENORMDOC.COM : Click to view the full PDF of ASME RTP-1 2019

Table M6-1 User's Basic Requirements Specification (UBRS) (As Required by the Provisions of ASME RTP-1) (Cont'd)

Page 2 of 4

RTP Edition No._____

UBRS Revision No._____

[ ] Additional inspection aids/methods [refer to para. 6-940(c) of ASME RTP-1] _____

3. Material selection

3.1 Material selection by:

[ ] Resin manufacturer (include data per section 4 of this document)

[ ] Fabricator (include data per section 4 of this document)

[ ] End User. Applicable User's specifications/standards, codes, ordinances, FDA requirements, etc. (list and specify; attach copies of local code/ordinance requirements) _____

[x] Other As required by Mandatory Appendix M-6

3.2 Material of construction:

Resin Clear chlorendic polyester Catalyst/cure system CoNap/MEKP

Veil Fiberglass surfacing veil Barcol hardness per para. 6-910(b)(4) NA

[ ] Lift lugs: [ ] RTP [ ] Carbon steel [ ] Other _____

[x] Hold-down lugs: [x] RTP [ ] Carbon steel [ ] Other _____

4. Chemical service data (shall be provided when Fabricator or resin manufacturer is making material selection) _____

4.1 Description of process function and process sequence: Not applicable

4.2 Contents:

Chemical Name	Concentration Max. %	Concentration Min. %	Exposure Time
Potable water	100	100	Continuous

4.3 pH range: _____ max. _____ min.

5. Design

5.1 Design conditions:

	Operating	Design
Internal pressure	14.0 psig (96.5 kPa)	15.0 psig (103 kPa)
External pressure	0.0 psig (0.0 kPa)	0.0 psig (0.0 kPa)
Temperature	80°F (27°C)	150°F (66°C)
Specific gravity	1.0	1.0
Liquid level	Full	Full

ASMENORMDOC.COM : Click to view the full PDF of ASME RTP-1 2019

Table M6-1 User's Basic Requirements Specification (UBRS) (As Required by the Provisions of ASME RTP-1) (Cont'd)

Page 3 of 4

RTP Edition No._____

UBRS Revision No._____

Wind/seismic/snow code (include edition or year) ASCE 7

Basic wind speed 0 MPH (m/s) Classification Category _____ Exposure _____

Elevation above grade_____ ft (m) Topographic factors _____

Seismic zone 1 Site-specific seismic information (soil type, ground motion coefficients, etc.) _____

Snow load 0 psf (kPa)

Capacities: Operating Flooded gal (L) Flooded By Fabricator gal (L)

5.2 Mechanical agitator: [ ] Required [ ] Not required

Dead load _____lb (N)

Static bending moment _____ft-lb (N·m)

Dynamic bending moment _____ft-lb (N·m)

Torque _____ft-lb (N·m)

Horsepower _____hp (W)

Impeller speed _____RPM Impeller diameter _____ in. (mm)

Number of impellers_____ Foot bearing: [ ] Yes [ ] No

5.3 Heating and cooling:

[ ] Electric panels

[ ] Steam coil

[ ] Steam sparger

[ ] Heat exchanger

[x] Other Not applicable

5.4 Mechanical and other forces:

[ ] Violent chemical reaction

[ ] Subsurface introduction of gas or vapor

[ ] Subsurface introduction of steam

[ ] Transmitted mechanical load/force

[ ] Impact due to introduction of solids

[ ] Vacuum from pump down (or vessel draining)

[ ] Vacuum from cool down

[x] Other Not applicable

5.5 Corrosion barrier excluded from structural calculations:

[ ] Yes

[x] No

5.6 Declaration of *critical service* (only by User or User's Agent; refer to para. 1-210 of ASME RTP-1):

[ ] Yes

[x] No

6. Designation of Inspector (Review paras. 1-400, 1-430, and 1-440 of ASME RTP-1. It shall be recognized that ASME RTP-1 establishes numerous duties for the Inspector, which necessitates that the Inspector be present in the fabrication shop throughout a major portion of the fabrication interval.). Inspector shall be:

[x] Fabricator's Quality Control principal

[ ] User's representative

[ ] Other

ASMENORMDOC.COM : Click to view the full PDF of ASME RTP-1 2019

Table M6-1 User's Basic Requirements Specification (UBRS) (As Required by the Provisions of ASME RTP-1) (Cont'd)

Page 4 of 4

RTP Edition No._____

UBRS Revision No._____

Inspector's name _____ Telephone _____

Company _____

Address _____

_____

6.1 Approval of Inspector designation

6.1.1 Authorized User's representative:

Name _____ Title _____

Signature _____ Date _____

6.1.2 Authorized Fabricator's representative:

Name _____ Title _____

Signature _____ Date _____

Additional requirements: Dimensional tolerances per Fig. NM7-1 are specified as mandatory.

All gaskets to be full faced, 1/8 in. (3mm) Neoprene at 60 ± 5 Shore A durometer.

All bolts to be B8 or B7 studs, or A307 Grade B bolts.

GENERAL NOTE: This form may be reproduced and used without written permission from ASME if used for purposes other than republication.

ASMENORMDOC.COM : Click to view the full PDF of ASME RTP-1 2019

(19)

Figure M6-1 ASME RTP-1 Demonstration Vessel

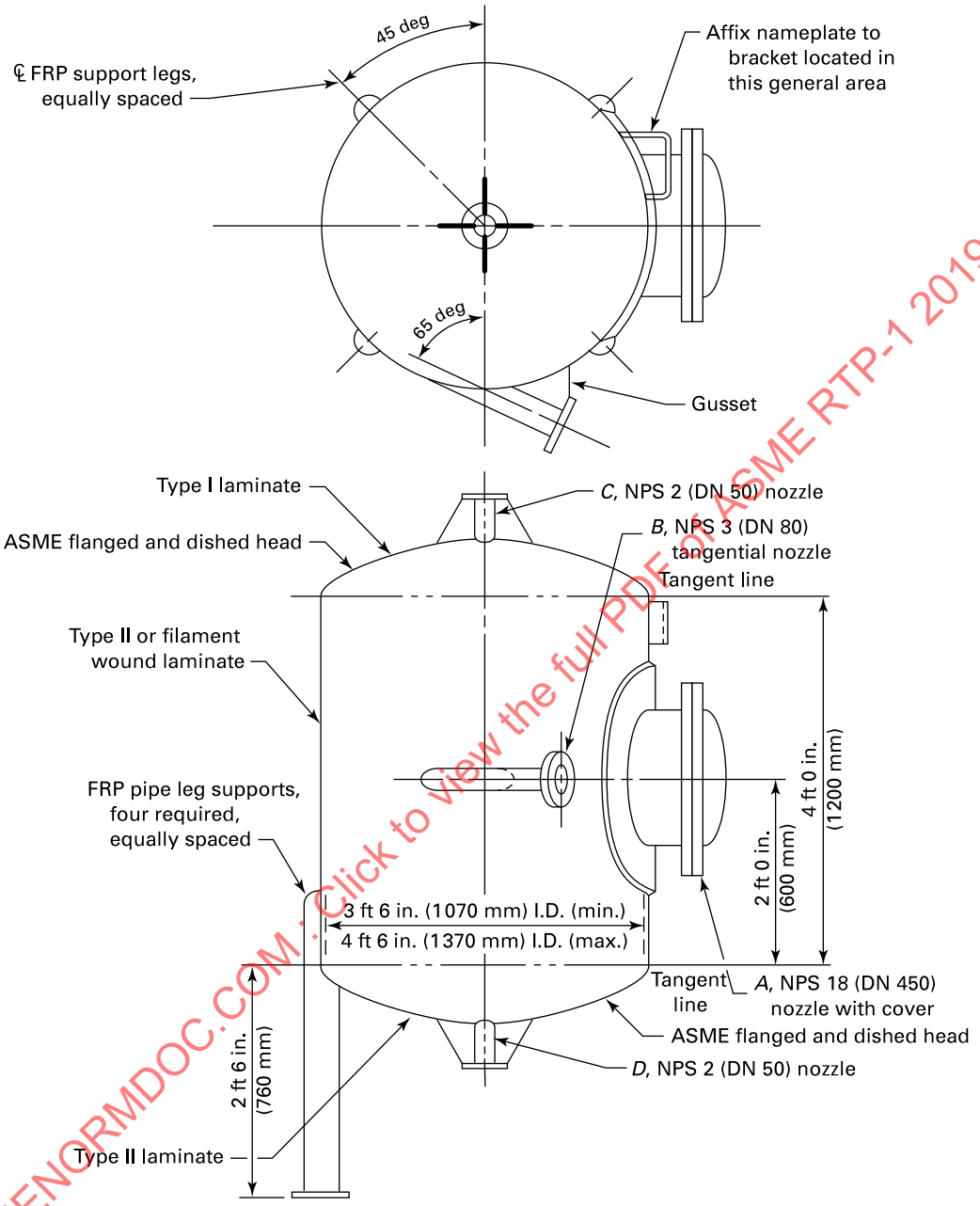

GENERAL NOTE: Laminate thicknesses shall be based on design pressure and temperature, and laminates shall be of the type specified here (see UBRS).

ASMENORMDOC.COM : Click to view the full PDF of ASME RTP-1 2019

Figure M6-2 Post-Test Sectioning of Vessel for Final Inspection and Display

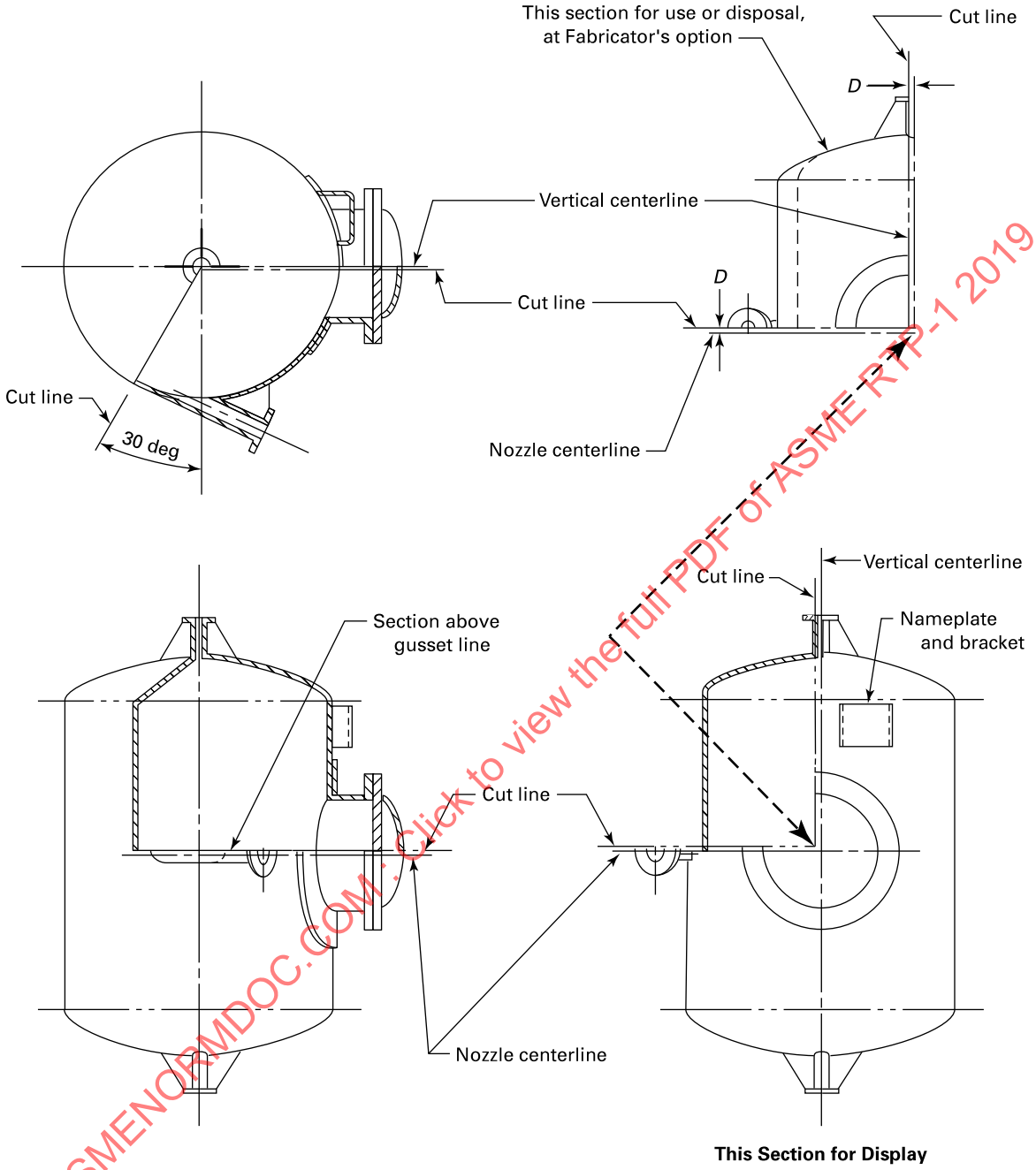

D = distance from centerline to cut line to be held to a practical minimum so as to clear the body and edge of the gusset with the cut

ASMENORMDOC.COM : Click to view the full PDF of ASME RTP-1 2019

(19) **Figure M6-3 Witness of Hydrotest of ASME RTP-1 Demonstration Vessel (Attachment No. 3)**

Witness of Hydrotest
ASME RTP-1 Demonstration Vessel

On this date _____ the following parties do certify by their signatures
(month/day/year)
that they have witnessed a hydrostatic test of the RTP demonstration vessel as constructed by

Fabricator's name _____

Address _____

_____

_____

and that this vessel did successfully contain the hydrostatic test pressure of 45.0 psig (310 kPa) for 2 hours without leakage or cracking of any of its parts.

(a) Fabricator's Inspector's signature _____
(signature)

_____
(print name)

(b) Qualified Designer's signature (and seal)

_____
(signature)

_____
(print name)

(c) Fabricator's authorized agent _____

GENERAL NOTES:
(a) This form may be reproduced and used without written permission from ASME if used for purposes other than republication.
(b) Attach this witness form directly to the Fabricator's Data Report (Form 1-2).
(c) An acceptable test pressure range is 44.0 psig to 46.0 psig (303 kPa to 317 kPa).

ASMENORMDOC.COM : Click to view the full PDF of ASME RTP-1 2019

MANDATORY APPENDIX M-7
REPAIR PROCEDURES

M7-100 SCOPE

This Appendix sets forth general criteria and repair procedures that are to be used to correct nonconformities in vessels before they are accepted as complying with this Standard and/or before they are placed into service.

M7-200 GENERAL CONDITIONS

When a defective or damaged laminate is to be repaired, the total sequence of laminate construction removed by the grinding process shall be replaced by a laminate sequence that shall provide structural properties meeting the requirements of this Standard. It is required that the repaired area have the same physical strength and chemical resistance characteristics as the specified original laminate.

(19) **M7-210 Nonconformities**

Vessels fabricated to this Standard may be repaired to correct nonconformities detected prior to being placed into service, provided all of the following conditions are met:

(a) The nonconformities shall be classified as repairable as indicated in para. M7-300.

(b) The repair procedures used shall be in accordance with one or more of those outlined in paras. M7-600 through M7-663.

(c) All repair procedures shall be accepted in advance by the Inspector. If structural repairs are necessary, the Qualified Designer shall also concur.

(d) The amount of repaired area does not exceed the limitations set forth in Table 6-1.

(e) Repairs are done by a qualified Secondary Bonder employed by either the original vessel Fabricator or his/her designated agent.

(f) All repairs are to be reinspected by the Inspector to ensure compliance with this Standard.

M7-220 Incorrectly Placed/Sized Attachments

Any vessel repairs that are necessary because of incorrect size or placement of nozzles or other attachments as required by the User shall also meet all the conditions set forth in para. M7-210.

M7-300 REPAIRS TO CORRECT NONCONFORMITIES

The following nonconformities shall be considered repairable by procedures outlined in this Appendix:

(a) all imperfections within the inner surface or interior layer as defined by Table 6-1

(b) low Barcol hardness levels, provided they are correctable by postcuring

(c) acetone sensitivity of nonmolded surfaces and the outside of secondary bond overlays

(d) all imperfections within the structural layer as defined by Table 6-1

(e) underthickness and/or understrength of the vessel structural laminate or secondary bond overlays, provided the correct laminate sequence was followed

(f) incorrect size or placement of vessel nozzles or attachments

(g) nonconformities that result in leakage during the hydrostatic test

A hydrostatic test is required after the correction of nonconformities described in (d) through (g). Additional hydrostatic testing of vessels previously tested per para. 6-950(b) is not required for repairs above the design liquid level.

M7-310 Unrepairable Nonconformities

The following nonconformities shall not be considered repairable by procedures outlined in this Appendix. A vessel that has any one of the following nonconformities shall not be certified as being fabricated in accordance with this Standard:

(a) incorrect materials of laminate construction, such as resins, curing agents, glass reinforcements, etc.

(b) incorrect structural laminate sequence

(c) incorrect laminate construction and thickness of the inner surface and interior layer

(d) incorrect wind angle for filament wound vessels

(e) out-of-roundness in excess of that permitted by Figure 4-9

(f) low Barcol hardness levels uncorrectable by postcuring

(g) vessel dimensions such as diameter, height, head radius, etc., that are not in compliance with the basic vessel design calculations and the UBRS

ASMENORMDOC.COM : Click to view the full PDF of ASME RTP-1 2019

M7-400 CLASSIFICATION OF REPAIRS

Vessel repairs shall be classified into the following types:

(a) Type 1 — inner surface repairs

(b) Type 2 — interior layer repairs

(c) Type 3 — structural layer repairs

(d) Type 4 — dimensional nonconformance repairs

(e) Type 5 — miscellaneous general repairs due to acetone sensitivity or low Barcol readings

(f) Type 6 — repairs due to nonconformance with the User's dimensional requirements

Each type of repair shall have its own corresponding general repair procedure as given in paras. M7-600 through M7-663.

(19) **M7-500 ORDER OF REPAIRS**

In cases where repairs due to damage are necessary to both the structural layer and the corrosion barrier, the repairs to the structural layer shall be performed first, followed by repairs to the corrosion barrier, unless otherwise accepted by the Inspector and approved by the Qualified Designer.

M7-600 REPAIR PROCEDURES

M7-610 Type 1 — Inner Surface Repairs

M7-611 General. Repairs shall involve removing the inner surface (surfacing veil) by grinding in order to remove nonconformities such as pits, inclusions, blisters, or air voids. Repairs may be accomplished by adding back the correct inner surface material as specified in the Fabricator's design drawings.

M7-612 Materials. Repairs shall be made with the same type of resin and reinforcement materials used to fabricate the original vessel inner surface. All laminate shall be in accordance with Part 2.

M7-613 Repair Personnel. Repairs shall be made by qualified Secondary Bonders.

M7-614 Repair Procedure

(a) The area to be repaired shall be determined. The percentage of repair area shall not exceed the limitations given in Table 6-1.

(b) Areas adjacent to the repair shall be protected to prevent damage during the repair operation.

(c) *Surface Preparation*

(1) The area to be repaired shall be ground on the surface with a 60 to 80 grit disk on a power grinder to remove all nonconformities. The ground area shall not be gouged out, but tapered out uniformly to the surface of adjacent unrepaired laminate. Only cured laminate shall be ground. Final grinding shall be done with a new disk surface to ensure a good surface profile for secondary bonding. Care shall also be taken not to remove more than the inner surface unless necessary to remove all of the nonconformity. If any of the backup layers of chopped strand mat are removed, a Type 2 repair procedure shall be utilized as given in paras. M7-620 through M7-625.

(2) The grinding dust from the ground surface shall be removed with a clean brush. If secondary bonding is not started soon after brushing the surface clean, the cleaning procedure shall be repeated just prior to applying the repair laminate.

(d) A new inner surface shall be applied as specified in the Fabricator's design drawings. Prior to applying the new veil or veils, the ground area shall be wetted with catalyzed resin.

(e) After the inner surface has been applied and properly rolled out, a final topcoat of paraffinated resin shall be applied.

M7-615 Acceptance Inspection. The repaired areas shall meet the requirements of Table 6-1.

After allowing the paraffinated topcoat to cure, the Barcol hardness and acetone sensitivity shall be checked. Postcuring of the repaired area is acceptable to achieve the required Barcol hardness.

M7-620 Type 2 — Interior Layer Repairs

M7-621 General. Repairs shall require removing both inner surface and interior layer laminate by grinding in order to remove nonconformities such as entrapped air, blisters, inclusions, cracks, dry spots, etc. Repairs may be accomplished by adding back the correct inner surface and interior layer laminate as specified in the Fabricator's design drawings.

M7-622 Materials. Repairs shall be made with the same type of resin and reinforcement materials used to fabricate the original vessel inner surface and interior layer. All laminate shall be in accordance with Part 2.

M7-623 Repair Personnel. Repairs shall be made by qualified Secondary Bonders.

M7-624 Repair Procedure

(a) The area to be repaired shall be determined. The percentage of repair area shall not exceed the limitations given in Table 6-1.

(b) Areas adjacent to the repair shall be protected to prevent damage during the repair operation.

(c) *Surface Preparation*

(1) The area to be repaired shall be ground with an 80 grit or coarser disk on a power grinder to remove all nonconformities. The ground area shall not be gouged out, but tapered out uniformly to the surface of adjacent unrepaired laminate. Only cured laminate shall be ground. Final grinding shall be done with a new disk surface to ensure a good surface profile for secondary bonding.

ASMENORMDOC.COM : Click to view the full PDF of ASME RTP-1 2019

(2) The grinding dust from the ground surface shall be removed with a clean brush. If secondary bonding is not started soon after brushing the surface clean, the cleaning procedure shall be repeated just prior to applying the repair laminate.

(d) A new inner surface and interior layer shall be applied as specified in the Fabricator's design drawings. This shall involve a minimum of two layers of 1.5 oz/ft^2 (450 g/m^2) chopped strand mat and one layer of surfacing veil. Prior to applying the new laminate, the ground area shall be wetted with catalyzed resin.

(e) After all required laminate has been applied, cured, inspected, and accepted, the area shall be lightly sanded to remove sharp projections and feather edges. The repaired area shall be topcoated with paraffinated resin.

M7-625 Acceptance Inspection. The repaired area shall meet the requirements of Table 6-1.

After allowing the paraffinated topcoat to cure, the Barcol hardness and acetone sensitivity shall be checked. Postcuring of the repaired area is acceptable to achieve the required Barcol hardness.

(19) M7-630 Type 3 — Structural Layer Repairs

M7-631 General. Repairs shall involve removing structural material by grinding. However, the approach to repair will vary depending on type of nonconformity, location, and relationship to nozzles, supports, etc. The Qualified Designer shall specify any special precautions or considerations needed for a particular repair.

M7-632 Materials. Repairs shall be made with the same type of resin and reinforcement materials used to fabricate the original vessel structural layers. Hand lay-up laminate shall be used to repair filament wound vessels (see para. M7-634). All laminate shall be in accordance with Part 2.

M7-633 Repair Personnel. Repairs shall be made by qualified Secondary Bonders.

M7-634 Repair Specification

(a) The Qualified Designer shall specify the surface area and shape of area to be disturbed for repair.

(b) Any extra material required to effect a proper repair above that removed by grinding will be determined and specified by the Qualified Designer. The required laminate sequence shall be used.

(c) For repair of nonconformities in filament wound structural layers, the complete hand lay-up laminate sequence shall be specified by the Qualified Designer.

M7-635 Repair Procedure

(a) The area to be repaired shall be determined. The percentage of repair area shall not exceed the limitations given in Table 6-1.

(b) Areas adjacent to the repair shall be protected to prevent damage during the repair operation.

(c) *Surface Preparation*

(1) The area to be repaired shall be ground with a 36 grit or coarser disk on a power grinder. The ground area shall not be gouged out, but tapered out uniformly from the root of the nonconformity being repaired. Only cured laminate shall be ground. Final grinding shall be done with a new disk to ensure a good surface profile for secondary bonding.

(2) The grinding dust from the ground surface shall be removed using a clean brush. If secondary bonding is not started soon after brushing the surface clean, the cleaning procedure shall be repeated just prior to applying the laminate.

(d) Hand lay-up laminate shall be applied in the same sequence of construction as removed in the grinding process and as specified by the Qualified Designer. The laminate sequence shall be started by wetting the ground surface with catalyzed resin. The first layer of the laminate shall be 1.5 oz/ft^2 (450 g/m^2) chopped strand mat.

(e) After all required laminate has been applied, cured, inspected, and accepted, the area shall be lightly sanded to remove sharp projections and feather edges. The repaired area shall be topcoated with paraffinated resin.

M7-636 Acceptance Inspection. Structural repairs shall meet the requirements of Table 6-1.

After allowing the paraffinated topcoat to cure, the Barcol hardness and acetone sensitivity shall be checked. Postcuring of the repaired area is acceptable to achieve the required Barcol hardness.

M7-640 Type 4 — Dimensional Nonconformance Repairs

M7-641 General. Repairs due to dimensional nonconformance shall include underthickness of shells or heads, nozzles, flanges, secondary bonds, etc. Repairs shall be done by adding additional laminate of the correct sequence specified in the Fabricator's design drawings.

M7-642 Materials. Repairs shall be made with the same type of resin and reinforcement materials used to fabricate the original vessel. Hand lay-up laminate shall be used to repair both filament wound and contact molded vessels. The Qualified Designer shall specify any additional thickness of hand lay-up laminate to be added to a filament wound shell. All laminate shall be in accordance with Part 2. (19)

M7-643 Repair Personnel. Repairs shall be made by qualified Secondary Bonders.

ASMENORMDOC.COM : Click to view the full PDF of ASME RTP-1 2019

(19) **M7-644 Repair Procedure**

(a) The area to be repaired shall be determined. The percentage of repair area shall not exceed the limitations given in Table 6-1.

(b) Areas adjacent to the repair shall be protected to prevent damage during the repair operation.

(c) *Surface Preparation*

(1) The area to be repaired shall be ground on the surface with a 36 grit or coarser disk on a power grinder. The ground area shall not be gouged out, but tapered out uniformly to the surface of adjacent unrepaired laminate. Only cured laminate shall be ground. Final grinding shall be done with a new disk surface to ensure a good surface profile for secondary bonding.

(2) The grinding dust from the ground surface shall be removed using a clean brush. If secondary bonding is not started soon after brushing the surface clean, the cleaning procedure shall be repeated just prior to applying the repair laminate.

(d) Hand lay-up laminate shall be applied in the correct laminate sequence specified in the Fabricator's design drawings and as specified by the Qualified Designer. The laminate sequence shall be started by wetting the ground surface with catalyzed resin. The first layer of the laminate shall be 1.5 oz/ft^2 (450 g/m^2) chopped strand mat.

(e) After all required laminate has been applied, cured, inspected, and accepted, the area shall be lightly sanded to remove sharp projections and feather edges. The repaired area shall be topcoated with paraffinated resin.

M7-645 Acceptance Inspection. The repaired area shall meet the requirements of Table 6-1.

After allowing the paraffinated topcoat to cure, the Barcol hardness and acetone sensitivity shall be checked. Postcuring of the repaired area is acceptable to achieve the required Barcol hardness.

M7-650 Type 5 — Undercured Laminate Repairs

M7-651 General. Undercured laminate causes low Barcol readings or acetone sensitivity at the surface. Repairs shall require postcuring the affected laminate or re-topcoating the surface of the acetone-sensitive laminate.

M7-652 Materials. Laminates involving re-topcoating shall be repaired with the same type of paraffinated resin used on the original laminate.

M7-653 Repair Personnel. All repairs shall be made by qualified Secondary Bonders.

M7-654 Repair Procedure to Correct Low Barcol Readings. The laminate giving low Barcol readings shall be heat postcured in accordance with the resin manufacturer's recommendations for maximum temperature versus time of cure. It is recommended that the vessel be placed in a circulating hot air oven for this purpose. The use of portable hot air blowers or exhaust steam (no pressure) shall also be permitted. The temperature of the laminate shall be monitored during the postcure to ensure that the proper temperature is maintained.

M7-655 Acceptance Inspection. After postcuring and the laminate has cooled to room temperature, the Barcol readings shall be taken again. Where postcuring does not produce high enough Barcol readings, the laminate shall be unacceptable. If the area of the laminate which has low Barcol readings is within the limits of repairability given in Table 6-1, it may be repaired using Type 1 or Type 2 repair procedures set forth in paras. M7-610 through M7-625.

M7-656 Repair Procedure to Correct Acetone Sensitivity

(a) The exterior of the laminate showing sensitivity to acetone shall be lightly sanded to remove sharp projections and feather edges and previously applied paraffinated resin.

(b) Next, the sanded area shall be re-topcoated with paraffinated catalyzed resin. If the sanding removes any part of the surfacing veil, an additional ply of surfacing veil shall also be applied along with the topcoat of paraffinated catalyzed resin. Care shall be taken during application of the topcoat to minimize the coverage of adjacent unsanded areas.

M7-657 Acceptance Inspection. After allowing the paraffinated topcoat to cure, the acetone sensitivity shall be checked. If the repaired area remains acetone sensitive, it is unacceptable.

M7-660 Type 6 — User's Dimensional Nonconformance Repairs

M7-661 General. Repairs due to nonconformance with the dimensional requirements include the misplacement of nozzles or attachments and the incorrect size of nozzles or attachments.

M7-662 Materials. All materials used to correct User's nonconformance with User's dimensional requirements shall be the same type of resin and reinforcement materials used to fabricate the original vessel. Further, the construction of new nozzles or attachments shall follow the specifications given in the original Fabricator's design drawing and be in accordance with Part 4 of this Standard. All laminates shall also be in accordance with Part 2.

M7-663 Repair Procedure for Attachments and Other Nonpenetrating Parts (19)

(a) Provided that the attachment or vessel part is attached only to the outside structural layer of the vessel, it may be removed and a new attachment or part added correctly. The fabrication of the new

ASMENORMDOC.COM : Click to view the full PDF of ASME RTP-1 2019

attachment shall be in accordance with the Fabricator's design drawings.

(b) The area where the nonconforming attachment or part was removed shall be ground smooth and re-topcoated in accordance with para. M7-656.

(c) A new nozzle or attachment may be placed on the vessel using the correct lamination procedure shown in the Fabricator's design drawings and in accordance with Part 4 of this Standard.

(d) If a new nozzle does not interfere with the original nozzle, the original nozzle shall not be removed unless requested by the User. The repair procedure shall be approved by the Qualified Designer.

ASMENORMDOC.COM : Click to view the full PDF of ASME RTP-1 2019

MANDATORY APPENDIX M-8
ACOUSTIC EMISSION EXAMINATION

M8-100 SCOPE

This Appendix states the criteria that a vessel shall satisfy to pass an acoustic emission examination. Equipment requirements are given in Article 11 of Section V of the ASME Boiler and Pressure Vessel Code.

NOTE: Additional background information concerning acoustic emission testing is contained in *Recommended Practice for Acoustic Emission Testing of Fiberglass Tanks/Vessels,* published by The Society of the Plastics Industry, Inc.

M8-200 GENERAL

(a) Discontinuities located with acoustic emission examination shall be evaluated by other techniques, e.g., visual, ultrasonic, dye penetrant, etc., and shall be repaired and retested as appropriate.

(b) A vessel for which an acoustic emission examination is required shall satisfy the criteria of Table M8-1. If the vessel does not, it is not in compliance with the requirements of this Standard.

(c) The acoustic emission examination is done in conjunction with the hydrostatic test. Therefore, it shall be witnessed by the Inspector, and he or she shall verify the acoustic emission examination report.

M8-300 DEFINITIONS AND INSTRUMENT CALIBRATION

The criteria in Table M8-1 are defined in part by the reference amplitude threshold; a counts parameter, N_c; and an amplitude parameter, A_m. The quantities are defined in this Appendix. The amplitude parameter is defined in terms of the reference amplitude threshold and the threshold of acoustic emission detectability.

M8-310 Threshold of Acoustic Emission Detectability

The threshold of acoustic emission detectability shall be determined using a 4 ft × 6 ft × ½ in. (1.2 m × 1.8 m × 13 mm) 99% pure lead sheet. The sheet shall be suspended clear of the floor. The *threshold of detectability* is defined as the average measured amplitude of ten events generated by a 0.01-in. (0.3-mm) pencil (2*H*) lead break at a distance of 4 ft 3 in. (1.3 m) from the sensor. A break shall be done at an angle of approximately 30 deg to the test surface with a 0.1-in. (2.5 mm) lead extension. The sensor shall be mounted 6 in. (150 mm) from the 4-ft (1.2 m) side and mid-distance between the 6-ft (1.8 m) sides.

M8-320 Reference Amplitude Threshold

(a) For large amplitude events, the reference amplitude threshold shall be determined using a 10 ft × 2 in. × ¾ in. (3 m × 50 mm × 20 mm) clean, mild steel bar. The bar shall be supported at each end by elastomeric, or similar, isolating pads.

(b) The *reference amplitude threshold* is defined as the average measured amplitude of ten events generated by a 0.01-in. (0.3-mm) pencil (2*H*) lead break at a distance of 7 ft (2.1 m) from the sensor. A break shall be done at an angle of approximately 30 deg to the test surface with a 0.1-in. (2.5 mm) lead extension. The sensor shall be mounted 12 in. (300 mm) from the end of the bar on the 2-in. (50-mm) wide surface.

M8-330 Count Criterion, N_c, and A_m Value

(a) The count criterion, N_c, shall be determined either before or after the test using a 0.3-mm pencil (2*H*) lead broken on the surface of the vessel. A break shall be done at an angle of approximately 30 deg to the test surface with a 0.1-in. (2.5 mm) lead extension. Calibration points shall be chosen so as to be representative of different constructions and thicknesses, and should be performed above and below the liquid line (if applicable), and away from manways, nozzles, etc.

(b) Two calibrations shall be carried out for each calibration point. One calibration shall be in the principal direction of the surface fibers (if applicable), and the second calibration shall be carried out along a line at 45 deg to the direction of the first calibration. Breaks shall be at a distance from the calibration point so as to provide an amplitude decibel value, A_m, midway between the threshold of detectability and the reference amplitude threshold.

The count criterion, N_c, shall be ten times the number of counts recorded from seven lead breaks at each of the two calibration points. The lead breaks shall be done with a 0.01-in. (0.3-mm) diameter (2*H*) pencil lead. The breaks shall be made with the lead at an angle of approximately 30 deg to the test surface with a 0.1-in. (2.5 mm) lead extension. When applying the count criterion, the value that is representative of the region where activity is observed should be used.

ASMENORMDOC.COM : Click to view the full PDF of ASME RTP-1 2019

Table M8-1 Acceptance Criteria

Criterion	First Filling	Subsequent Fillings	Significance of Criterion
Emissions during hold	None beyond 2 min	None beyond 2 min	Measure of continuing permanent damage
Felicity ratio	Not applicable	Greater than 0.95	Measure of severity of previously induced damage
Total counts [Note (1)]	Less than N_c	Less than N_c /2	Measure of overall damage during a load cycle
Number of events greater than reference amplitude threshold	Less than 10	Less than 10	Measure of high energy microstructural failures. This criterion is often associated with fiber breakage.

GENERAL NOTE: An acceptable vessel shall meet all the criteria listed above. Background noise shall be properly discounted when applying acceptance criteria.

NOTE: (1) Varies with instrument manufacturer. See para. M8-330 for the definition of N_c.

M8-400 WRITTEN PROCEDURE REQUIREMENTS

Acoustic emission examinations shall be performed following a written procedure. The procedure shall satisfy the requirements of para. T-1128 in Article 11 of Section V of the ASME Boiler and Pressure Vessel Code.

M8-500 WRITTEN REPORT OF RESULTS

The results of an acoustic emission examination shall be reported in a written document satisfying the requirements of para. T-1190 in Article 11 of Section V of the ASME Boiler and Pressure Vessel Code. The report shall be made available for review and acceptance by the Inspector.

ASMENORMDOC.COM : Click to view the full PDF of ASME RTP-1 2019

MANDATORY APPENDIX M-9 GLOSSARY

(19)

accelerator: a material added to the resin to increase the rate of polymerization (curing).

audit: a systematic review to assess the implementation of prescribed procedures, specifications, or standards.

axial: in the direction of the axis (lengthwise centerline) of the equipment.

Barcol hardness test: test to determine the surface indentation hardness of the resin, which is directly related to the degree of cure. The Barcol Impressor is the instrument used for measuring polyester and vinyl ester resin hardness (ASTM D2583).

binder: chemical treatment applied to the random arrangement of glass fibers to give integrity to mats. Specific binders are utilized to promote chemical compatibility with the various laminating resins used.

blister: raised spot on the surface of a laminate caused by a subsurface air void.

bonding: joining of two or more parts by adhesive forces.

bond strength: force per unit area necessary to rupture a bond in interlaminar shear.

burned areas: areas of laminate showing evidence of decomposition (e.g., discoloration and/or cracking) due to excessive resin exotherm.

burn out (burn off): thermal decomposition of organic materials (resins and binders) from a laminate specimen in order to determine the weight percent of resin and glass reinforcement (synthetic reinforcements decompose together with the resin and binder).

catalyst: an organic peroxide material used to activate the polymerization reaction of a resin, causing it to harden (polymerization initiator).

certify: to attest, by signature and date, to conformance to procedures, specifications, or standards. Where certification is required by a Qualified Designer, certification shall include application of the PE stamp.

chopped strand mat: reinforcement made from randomly oriented glass strands that are held together in mat form using a binder. Each strand has a sizing.

chopper gun: a machine that is used to cut continuous fiberglass roving to predetermined lengths [usually ½ in. (13 mm) to 2 in. (50 mm)] and propel the cut strands to the mold surface. In the spray-up process, a catalyzed resin spray is deposited simultaneously on the mold. When intersperse layers are provided in filament winding, the resin spray is often not used.

contact molding: process for molding RTP in which reinforcement and resin are placed in or on a mold. Cure is either at room temperature using a catalyst-promoter system or by heat in an oven. Includes both hand lay-up and spray-up. For the purposes of this Standard, laminates manufactured with a process other than filament winding are contact molded.

corrosion layer (barrier): see paras. 2A-221 and 2A-222.

coverage: in hoop filament winding, the complete covering of the mandrel surface by a single layer of glass reinforcement and resin. In helical winding, two layers must be applied to achieve one coverage.

crazing: the formation of tiny hairline cracks in varying degrees throughout the resin matrix, particularly in resin-rich areas.

critical service: see para. 1-210(c).

curing agents: materials used to initiate the polymerization of a resin. The catalyst is the primary agent. Promoters and accelerators are secondary or assisting agents.

cut edge: end of a laminate resulting from cutting that is not protected by a corrosion barrier.

delamination: physical separation or loss of bond between laminate plies.

dished end: radiused end closure for a cylindrical vessel, as opposed to a flat or coned end.

dry spot: an area where the reinforcement fibers have not been sufficiently wetted with resin.

edge sealing: application of reinforcement and resin, or resin alone, to seal cut edges and provide a corrosion resistant barrier. The final layer of resin shall be paraffinated.

entrapped air void: cavity in a laminate caused by a trapped gas bubble.

environment: state of the surroundings in contact with the internal or external surface. Included are the temperature, pressure, chemical exposure, exposure to sunlight, relative humidity, liquids, and/or gases.

ASMENORMDOC.COM : Click to view the full PDF of ASME RTP-1 2019

equipment: vessels used for the storage, accumulation, or processing of corrosive or otherwise hazardous substances at pressures ranging from full vacuum to 15.0 psig (103 kPa).

equipment assembler: person who puts together the component parts, e.g., joining sections, installation of nozzles, etc.

exotherm: evolution of heat by the resin during the polymerization reaction. The word *exotherm* is often used, however, to designate the maximum temperature reached during the polymerization process.

exotherm ply: that ply of chopped strand mat at which the lamination process is stopped to allow gelation and exotherm of the existing laminate.

exterior layer: outer surface layer of a laminate; see para. 2A-224.

Fabricator: producer of RTP equipment. The Fabricator combines resin and reinforcing fibers to produce the final product.

fiber(glass): a fine solid thread of glass.

fiberglass roving: a number of strands or filaments of glass fibers gathered together with little or no twist.

fiberglass woven roving: heavy fabric woven from glass fiber rovings.

fiber wetting: coating (wetting) of the fiberglass with resin by means of roll-out or immersion.

filament: see *fiber.*

filament winding: a process for forming RTP parts by winding either dry or resin-saturated continuous roving strands onto a rotating mandrel.

fillers: inert materials that are added to the resin to increase density, increase viscosity, improve abrasion resistance, enhance resin application properties, decrease resin shrinkage, reduce cost, etc.

fill picks: the rovings in a woven roving that run in the transverse direction of the fabric, i.e., across the roll width of the fabric.

fit-up: the match between joining parts, elements, or components.

flame retardant resin: halogenated resins that can be used with or without additives to provide a laminate having a reduced flame spread as measured in accordance with NFPA 255, Standard Method of Surface Burning Characteristics of Building Materials (UL723, ASTM E84). The resins are not fire retardant in their liquid state.

flame spread rating: index number resulting from testing in accordance with NFPA 255, Standard Method of Surface Burning Characteristics of Building Materials (UL723, ASTM E84).

gap filling: the filling of voids between joined parts, elements, or components with resin putty or resin.

gel: the initial jellylike solid phase that develops during the polymerization of resin.

gel time: time from the initial mixing of the resin with catalyst to when gelation begins.

glass content: weight percent of glass fiber reinforcement in the laminate.

gun roving: fiberglass roving designed for use in a chopper gun for spray-up application.

hand lay-up: a method of contact molding wherein the glass fiber reinforcement is applied to the mold, in the form of chopped strand mat or woven roving, by hand or from a reel. The resin matrix is applied by various methods including brush, roller, or spray gun. Consolidation of the composite laminate is by rolling.

heat deflection temperature: temperature at which a specified bar specimen deflects 0.010 in. (0.25 mm) when loaded as a simple beam to a constant 264 psi (1.82 MPa) (see ASTM D648, Test Method for Deflection Temperature of Plastics Under Flexural Load). Usually refers to a resin casting, not a laminate.

helical winding: filament winding where the reinforcement is placed at some angle (other than 0 deg or 90 deg) to the axis of rotation.

hot patch: several small fiberglass mat tabs, saturated with highly catalyzed resin, used to hold butted or joined parts or components in preparation for bonding.

hydrostatic test: pressure test of equipment using water as the test medium.

independent testing laboratory: the laboratory conducting the tests required by RTP-1 must be an entity separate organizationally, legally, and financially from the Fabricator and User or User's Agent. Additionally, no commercial, financial, or individual relationships shall exist between the parties that might compromise efforts to produce and report accurate test results. It is expected, however, that a commercial purchase order, contract, or agreement will be employed by the parties to arrange for testing services. The *independent testing laboratory* must be equipped and staffed with the necessary skilled personnel to conduct the tests in accordance with the requirements of the Standard.

initiator: see *catalyst.*

inner surface: see para. 2A-221.

interior layer: see para. 2A-222.

intersperse: chopped fiberglass used in a filament wound laminate, usually in thin layers between winding coverages.

isophthalic polyester: a polyester made from isophthalic acid.

joint overlay: an overlay laminate that joins the adjoining surfaces of two contacting parts or elements.

ASMENORMDOC.COM : Click to view the full PDF of ASME RTP-1 2019

laminate: the total of the part constructed by combining one or more layers of material (reinforcement and/or resin). As used in this Standard, the corrosion laminate consists of the corrosion-resistant barrier, the structural layer, and the outer surface.

laminate composition: the sequence of reinforcement materials on a type, class, and category basis that make up a laminate.

laminate element: a part of the structural layer of a filament wound laminate that is described by the wind angle, number of coverages with supplementary reinforcement (if used), and the required sequence.

laminate structure (Type I, hand lay-up): see Table 2A-1.

laminate structure (Type II, hand lay-up): see Table 2A-2.

laminate structure (Type X): see Subpart 2A.

lamination analysis: procedure by which, given the amount and properties of the resin and the properties and orientation of the reinforcement, it is possible to calculate the elastic properties of the individual layers and the total laminate.

layout: the arrangement and location of parts, elements, and/or components that reflect the design of a product.

leno strands: a pair of warp ends at each edge of a woven fiberglass fabric.

liner: see paras. 2A-221 and 2A-222.

longitudinal: see *axial.*

lot, resin: a resin lot is a quantity of resin that is formulated to its final composition in a single vessel, tested and assigned a unique number, and covered by a certificate of analysis.

mandrel: mold around which a laminate is formed to fabricate a cylindrical section.

Manufacturers: producers of materials of construction, e.g., resin, reinforcement fibers, catalysts, common additives, etc.

manway: large nozzle or opening in a vessel for the purpose of entry by personnel.

materials: ingredients (reinforcements, resins, catalysts, and common additives) that are used to fabricate the equipment.

matrix: resin phase of a fiberglass resin composite.

minor repairs: repairs that do not exceed the area of repair allowed in Part 6 and meet the minimum visual acceptance level indicated in the UBRS.

mold: the form over which or into which resin and reinforcements are placed to form the composite product shape.

mold release agents: see *parting agents.*

monomer: a basic compound that can react with itself to form a polymer.

MSPI: Manufacturer's Specific Product Identification.

oblation: the process by which cylindrical tank shells are compressed to create shapes varying from oval to figure eight. This action is taken to facilitate over-the-road shipment or installation in a confined space.

original document: the original source document or a reproduction of the original source document bearing an original signature.

overlay: laminates used over base RTP structures to secure a joint, seal a seam, attach a nozzle, etc.

paraffinated resin: resin containing a small amount of dissolved paraffin (usually 0.1% to 0.5%). Polymerization of polyesters is inhibited by contact with the atmosphere. During cure, the paraffin migrates to the surface, sealing it against atmospheric exposure.

parting agents: also called *mold release agents*. Compounds that assist in releasing an RTP part from its mold.

peroxide catalyst: see *catalyst.*

pit: small crater in the surface of the laminate (see Table 6-1).

polyester resin: resin produced by the polycondensation of dihydroxy derivatives and dibasic organic acids or anhydrides, wherein at least one component contributes ethylenic unsaturation yielding resins that can be compounded with styryl monomers and reacted to give highly cross-linked thermoset resins.

postcuring: process of applying heat [180°F (82°C) to 200°F (93°C)] to an RTP part, following the exotherm cycle. Proper postcuring will shorten the time to total cure.

profile: the roughness (smoothness) of the surface.

promoter: a material that activates the catalyst that cures the resin (also see *accelerator*).

PVA: abbreviation for polyvinyl alcohol, a parting agent.

quality assurance: the program by which the Fabricator provides evidence that the quality control system has been followed in the construction of the product.

quality control: the program a Fabricator uses to fabricate the equipment in compliance with this Standard.

referee samples: laminate specimens submitted to establish a level of quality for judging acceptance/rejection of production equipment.

reinforcement: glass fibers having the form of chopped roving, continuous roving, fabric, or chopped strand mat. These fibers are added to the resin matrix to strengthen and improve the properties of the resin.

release film: film used to facilitate removal of the part from the mold or mandrel. Oriented polyester film,3-5 mil (Mylar;Rm, Types A, S, or D; or Melinex 11®, Types S, O, or 442), has been found suitable for this purpose.

ASMENORMDOC.COM : Click to view the full PDF of ASME RTP-1 2019

resin: the matrix of the laminate.

resin putty: resin filled with clay, fumed silica, milled glass fibers, or other inert materials to provide puttylike consistency.

resin rich layer: term often used to describe the corrosion barrier. The term does not imply excessive resin content.

resin richness: excessive amounts or uneven distribution of resin in the laminate. Such areas are subject to cracking. Resin richness is the result of improper wet-out procedures as well as inadequate or improper roll-out techniques or drainage.

roll-out: densification of the laminate by working reinforcement into the resin and the air out of the resin using a roller (a serrated metal or thermoplastic roller is often used for this purpose).

rough profile: the result of sanding, machining, or otherwise abrading a laminate surface to produce a roughened surface for bonding.

roving: a plurality of strands or filaments gathered together with little or no twist in a package known as a roving ball.

RTP: reinforced thermoset plastic.

secondary bond strength: adhesive force that holds a separately cured laminate to the basic substrate laminate.

sizing: surface treatment or coating applied to filaments to improve the filament-to-resin bond.

slugs: unfiberized beads of glass.

spray-up: method of contact molding wherein resin and chopped strands of continuous filament glass fiber roving are deposited on the mold directly from a chopper gun.

strain: elongation per unit length.

strand: a plurality of filaments gathered together and bonded with sizing.

stress: load per unit area.

structural layer: the portion of the laminate construction providing the primary mechanical strength.

surface preparation: the act of roughening, priming, or otherwise treating laminate surfaces to achieve surface conditions that are conducive to adhesion of subsequently applied laminate bonds.

surfacing veil: thin mat of fiberglass, synthetic organic fiber, or carbon fiber that is used to reinforce the corrosion-resistant resin-rich layer on the inside or outside of equipment or to provide a smooth surface on the outside of equipment.

Tex: linear density of roving expressed in grams per 1 000 m.

Type I, Type II, and Type X laminates: see *laminate structure*.

unidirectional rovings: continuous parallel roving strands of glass fibers held together with periodic cross strands.

User: organization for which the equipment is being fabricated.

UV absorber: compounds that are added to resins to enhance their ultraviolet resistance.

veil: see *surfacing veil*.

vinyl ester resin: resin characterized by reactive unsaturation located predominately in terminal positions which can be compounded with styryl monomers and reacted to give highly cross-linked thermoset copolymers.

visual acceptance criteria: see para. 6-940.

voids: unfilled space caused by air or gas in the resin mix or by entrapment of such gases during lay-up of individual plies of glass. Excessive voids reduce the strength and chemical resistance of the laminate, particularly if the voids are at the resin-glass interface.

warp ends: the roving in a woven roving that runs in the longitudinal direction of the fabric, i.e., along the roll length of the fabric.

wind angle: angle from the axis of rotation at which the reinforcement strands are placed in the filament winding process.

wind cycle: in filament winding, one traversing of the carriage to the end of the mandrel and return to the original position. Depending on bandwidth, part diameter, and wind angle, one or more wind cycles will be needed to achieve one coverage.

yield: linear density of roving, expressed in yards per pound.

ASMENORMDOC.COM : Click to view the full PDF of ASME RTP-1 2019

MANDATORY APPENDIX M-10
REFERENCE DOCUMENTS

The following is a list of publications referenced in this Standard. The latest revisions of all references should be utilized.

AISC, Manual of Steel Construction
Publisher: American Institute of Steel Construction (AISC), 1 East Wacker Drive, Suite 700, Chicago, IL 60601 (www.aisc.org)

API Standard 650, Welded Steel Tanks for Oil Storage
Publisher: American Petroleum Institute (API), 1220 L Street, NW, Washington, DC 20005 (www.api.org)

ASCE 7, Minimum Design Loads for Buildings and Other Structures
Publisher: American Society of Civil Engineers (ASCE), 1801 Alexander Bell Drive, Reston, VA 20191 (www.asce.org)

ASME B16.5, Pipe Flanges and Flanged Fittings
ASME B18.21.1, Washers: Helical Spring-Lock, Tooth Lock, and Plain Washers (Inch Series)
ASME B31.3, Process Piping
ASME BPVC Section II — Materials
ASME BPVC, Section V — Nondestructive Examination, Subsection A, Article 11, Acoustic Emission Examination of Fiber-Reinforced Plastic
ASME BPVC Section VIII — Rules for Construction of Pressure Vessels
ASME CA-1, Conformity Assessment Requirements
Publisher: The American Society of Mechanical Engineers (ASME), Two Park Avenue, New York, NY 10016-5990 (www.asme.org)

ASQ Z1.4, Sampling Procedures and Tables for Inspection by Attributes
Publisher: American Society for Quality (ASQ), P.O. Box 3005, Milwaukee, WI 53201 (www.asq.org)

ASTM C177, Standard Test Method for Steady-State Heat Flux Measurements and Thermal Transmission Properties by Means of the Guarded-Hot-Plate Apparatus
ASTM C581, Standard Practice for Determining Chemical Resistance of Thermosetting Resins Used in Glass-Fiber-Reinforced Structures Intended for Liquid Service
ASTM C582, Standard Specification for Contact-Molded Reinforced Thermosetting Plastic (RTP) Laminates for Corrosion-Resistant Equipment
ASTM D638, Standard Test Method for Tensile Properties of Plastics
ASTM D648, Standard Test Method for Deflection Temperature of Plastics Under Flexural Load in the Edgewise Position
ASTM D696, Standard Test Method for Coefficient of Linear Thermal Expansion of Plastics Between −30°C and 30°C With a Vitreous Silica Dilatometer
ASTM D790, Standard Test Methods for Flexural Properties of Unreinforced and Reinforced Plastics and Electrical Insulating Materials
ASTM D792, Standard Test Methods for Density and Specific Gravity (Relative Density) of Plastics by Displacement
ASTM D883, Standard Terminology Relating to Plastics
ASTM D1248, Standard Specification for Polyethylene Plastics Extrusion Materials for Wire and Cable
ASTM D1593, Standard Specification for Nonrigid Vinyl Chloride Plastic Film and Sheeting
ASTM D1599, Standard Test Method for Resistance to Short-Time Hydraulic Pressure of Plastic Pipe, Tubing, and Fittings
ASTM D1781, Standard Test Method for Climbing Drum Peel for Adhesives
ASTM D1784, Standard Specification for Rigid Poly (Vinyl Chloride) (PVC) Compounds and Chlorinated Poly (Vinyl Chloride) (CPVC) Compounds
ASTM D1785, Standard Specification for Poly (Vinyl Chloride) (PVC) Plastic Pipe, Schedules 40, 80, and 120
ASTM D2241, Standard Specification for Poly (Vinyl Chloride) (PVC) Pressure-Rated Pipe (SDR Series)
ASTM D2583, Standard Test Method for Indentation Hardness of Rigid Plastics by Means of a Barcol Impressor
ASTM D2584, Standard Test Method for Ignition Loss of Cured Reinforced Resins
ASTM D3039, Standard Test Method for Tensile Properties of Polymer Matrix Composite Materials
ASTM D3159, Standard Specification for Modified ETFE-Fluoropolymer Molding and Extrusion Materials
ASTM D3167, Standard Test Method for Floating Roller Peel Resistance of Adhesives
ASTM D3222, Standard Specification for Unmodified Poly (Vinylidene Fluoride) (PVDF) Molding Extrusion and Coating Materials
ASTM D3275, Standard Classification System for E-CTFE-Fluoroplastic Molding, Extrusion, and Coating Materials

ASMENORMDOC.COM : Click to view the full PDF of ASME RTP-1 2019

ASTM D3294, Standard Specification for PTFE Resin Molded Sheet and Molded Basic Shapes
ASTM D3307, Standard Specification for Perfluoroalkoxy (PFA)-Fluorocarbon Resin Molding and Extrusion Materials
ASTM D3350, Standard Specification for Polyethylene Plastics Pipe and Fittings Materials
ASTM D3368, Standard Specification for FEP-Fluorocarbon Sheet and Film
ASTM D3846, Standard Test Method for In-Plane Shear Strength of Reinforced Plastics
ASTM D4101, Standard Specification for Polypropylene Injection and Extrusion Materials
ASTM D4285, Standard Test Method for Indicating Oil or Water in Compressed Air
ASTM D4444, Standard Test Methods for Laboratory Standardization and Calibration of Hand-Held Moisture Meters
ASTM D4895, Standard Specification for Polytetrafluoroethylene (PTFE) Resin Produced From Dispersion
ASTM D5083, Standard Test Method for Tensile Properties of Reinforced Thermosetting Plastics Using Straight-Sided Specimens
ASTM D5162, Standard Practice for Discontinuity (Holiday) Testing of Nonconductive Protective Coating on Metallic Substrates
ASTM D5575, Standard Classification Systems for Copolymers of Vinylidene Fluoride (VDF) With Other Fluorinated Materials
ASTM E84, Standard Test Method for Surface Burning Characteristics of Building Materials
Publisher: American Society for Testing and Materials (ASTM International), 100 Barr Harbor Drive, P.O. Box C700, West Conshohocken, PA 19428-2959 (www.astm.org)

AWS B2.4, Specification for Welding Procedure and Performance Qualification for Thermoplastics
AWS D1.1, Structural Welding Code — Steel
AWS G1.10M, Guide for the Evaluation of Thermoplastic Welds
Publisher: American Welding Society (AWS), 8669 NW 36 Street, No. 130, Miami, FL 33166 (www.aws.org)

Barbero, E. J., Introduction to Composite Materials Design, Taylor and Francis, Boca Raton, FL (1998)
BS 4994, Specification for Design and Construction of Vessels and Tanks in Reinforced Plastics
BS 6399-2, Loading for Buildings, Code of Practice for Wind Loads
Publisher: British Standards Institution, Inc. (BSI), 12950 Worldgate Drive, Suite 800, Herndon, VA 20170 (www.bsigroup.com)

Christensen, R. M., Mechanics of Composite Materials, Dover Publications, Mineola, NY (2005)

Christensen, R. M., and Lo, K. H., Solutions for Effective Shear Properties in Three Phase Sphere and Cylinder Models, *Journal of the Mechanics and Physics of Solids*, Vol. 27, 315-330 (1979)
EN 1991, Eurocode 1, Actions on structures
EN 1998, Eurocode 8, Design of structures for earthquake
EN 13121, GRP tanks and vessels for use above ground
Publisher: European Committee for Standardization (CEN), Avenue Marnix 17, B-1000, Brussels, Belgium (www.cen.eu)

Hashin, Z., Analysis of Properties of Fiber Composites With Anisotropic Constituents, *Journal of Applied Mechanics*, Vol. 46, 543-550 (1979)
International Building Code
Standard Building Code
Uniform Building Code
Publisher: International Code Council (ICC), 500 New Jersey Avenue, NW, Washington, DC 20001(www.iccsafe.org)

ISO 14130, Fibre-reinforced plastic composites — Determination of apparent interlaminar shear strength by short-beam method
Publisher: International Organization for Standardization (ISO), Central Secretariat, Chemin de Blandonnet 8, Case Postale 401, 1214 Vernier, Geneva, Switzerland (www.iso.org)

Jones, R. M., Mechanics of Composite Materials, Second Edition, Taylor and Francis, Philadelphia (1999)
Manual de Diseño de Obras Civiles
Publisher: Comisión Federal de Electricidad, Reforma 164, Col. Juarez, Cuauhtémoc, Mexico (www.cfe.gob.mx)

MIL-HDBK-17-3F, Composite Materials Handbook, Vol. 3: Polymer Matrix Composites Materials Usage, Design, and Analysis
Publisher: U.S. Army Research Laboratory, Weapons and Materials Research Directorate, Aberdeen Proving Ground, MD 21005-5069 (www.arl.army.mil)

NASA, SP-8007, Buckling of Thin-Walled Circular Cylinders
Publisher: NASA Langley Research Center, Hampton, VA 23681 (www.sti.nasa.gov)

National Building Code
Publisher: American Insurance Association (AIA), 2101 L Street, NW, Suite 400, Washington, DC 20037 (www.aiadc.org)

National Building Code of Canada
Publisher: National Research Council Canada, 1200 Montreal Road, Ottawa, Ontario, K1A-0R6, Canada (www.nrc-cnrc.gc.ca/eng)

NFPA 255, Standard Method of Test of Surface Burning Characteristics of Building Materials

ASMENORMDOC.COM : Click to view the full PDF of ASME RTP-1 2019

Publisher: National Fire Protection Association (NFPA), 1 Batterymarch Park, Quincy, MA 02169 (www.nfpa.org)

Recommended Practice for Acoustic Emission Testing of Fiberglass Tanks/Vessels
Publisher: Plastics Industry Association, 142 K Street, NW, Washington, DC 20005(www.plasticsindustry.org)

UL 723, Standard Test for Surface Burning Characteristics of Building Materials
Publisher: Underwriters Laboratories, Inc. (UL), 333 Pfingsten Road, Northbrook, IL 60062-2096; Order Address: Comm 2000, 151 Eastern Avenue, Bensenville, IL 60106 (www.ul.com)

University of Delaware Center for Composites Materials, Delaware Composites Design Encyclopedia, CRC Press, Boca Raton FL

Vinson, J. R., and Sierakowski, R. L., The Behavior of Structures Composed of Composite Materials, Kluwer Academic Publishers, Dordrecht, The Netherlands (1987)

ASMENORMDOC.COM : Click to view the full PDF of ASME RTP-1 2019

MANDATORY APPENDIX M-11
SUBMITTAL OF TECHNICAL INQUIRIES TO THE REINFORCED THERMOSET PLASTIC CORROSION-RESISTANT EQUIPMENT COMMITTEE

ASMENORMDOC.COM : Click to view the full PDF of ASME RTP-1 2019

M11-100 INTRODUCTION

(a) The ASME Reinforced Thermoset Plastic Corrosion-Resistant Equipment Committee and its subcommittees and task groups meet regularly to consider revisions of the rules, new rules as dictated by technological development, Cases, and interpretations. This Appendix provides guidance to users for submitting technical inquiries to the Committee. Technical inquiries include requests for revisions or additions to the rules, requests for Cases, and requests for interpretations.

(b) Cases may be issued by the Committee when the need is urgent. Cases clarify the intent of existing requirements or provide alternative requirements. Cases are written as a Question and a Reply, and are usually intended to be incorporated into the Standard at a later date. Interpretations provide the meaning of or the intent of existing rules in the Standard and are also presented as a Question and a Reply. Both Cases and interpretations are published by the Committee.

(c) The rules, Cases, and interpretations established by the Committee are not to be considered as approving, recommending, certifying, or endorsing any proprietary or specific design, or as limiting in any way the freedom of Fabricators or constructors to choose any method of design or any form of construction that conforms to the rules.

(d) As an alternative to the requirements of this Appendix, members of the Committee and its subcommittees and task groups may introduce requests for revisions or additions, Cases, and interpretations at their respective committee meetings.

(e) Inquiries that do not comply with the provisions of this Appendix or that do not provide sufficient information for the Committee's full understanding may result in the request being returned to the inquirer with no action.

M11-200 INQUIRY FORMAT

Submittals to the Committee shall include the following:

(a) *Purpose*. Specify

(1) revision of present rule(s)

(2) new or additional rule(s)

(3) Case or

(4) interpretation

(b) *Background*. Provide the information needed for the Committee's understanding of the inquiry, being sure to include reference to the applicable edition, paragraphs, figures, and tables. Preferably, provide a copy of the specific referenced portions of the Standard.

(c) *Presentations*. The inquirer may desire or be asked to attend a meeting of the Committee to make a formal presentation or to answer questions from the Committee members with regard to the inquiry. Attendance at a committee meeting shall be at the expense of the inquirer. The inquirer's attendance or lack of attendance at a meeting shall not be a basis for acceptance or rejection of the inquiry by the Committee.

M11-300 REVISIONS OR ADDITIONS

Requests for revisions or additions shall provide the following:

(a) *Proposed Revision(s) or Addition(s)*. For revisions, identify the rules of the Standard that require revision and submit a copy of the appropriate rules as they appear in the Standard, marked up with the proposed revision. For additions, provide the recommended wording referenced to the existing rules.

(b) *Statement of Need*. Provide a brief explanation of the need for the revision(s) or addition(s).

(c) *Background Information*. Provide background information to support the revision(s) or addition(s), including any data or changes in technology that form the basis for the request that will allow the Committee to adequately evaluate the proposed revision(s) or addition(s). Sketches, tables, figures, and graphs should be submitted as appropriate. When applicable, identify any pertinent paragraph in the Standard that would be affected by the revision(s) or addition(s), and identify paragraphs in the Standard that reference the paragraphs that are to be revised or added.

M11-400 CASES

Requests for Cases shall provide a *Statement of Need* and *Background Information* similar to that defined in paras. M11-300(b) and (c), respectively, for revisions or additions. The proposed Case should be written as a *Question* and a *Reply* in the same format as any existing Cases. Requests for Cases should also indicate the applicable edition(s) and addenda to which the proposed Case applies.

M11-500 INTERPRETATIONS

Requests for interpretations shall provide the following:

(a) Provide a condensed and precise *Question,* omitting superfluous background information and, when possible, composed in such a way that a "yes" or a "no" *Reply,* possibly with brief provisos, is acceptable. The *Question* should be technically and editorially correct.

(b) Provide a proposed *Reply* that will clearly and concisely answer the *Question.* Preferably, the *Reply* should be "yes" or "no," possibly with brief provisos.

(c) *Background Information*. Provide any background information that will assist the Committee in understanding the proposed *Question* and *Reply.*

M11-600 SUBMITTALS

Submittals to and responses from the Committee shall meet the following:

(a) *Submittal*. Inquiries from users shall preferably be submitted in typewritten form; however, legible handwritten inquiries will also be considered. They shall include the name, address, telephone number, and fax number, if available, of the inquirer and be mailed to the following address:

Secretary, RTP Standards Committee
The American Society of Mechanical Engineers
Two Park Avenue
New York, NY 10016-5990

(b) *Response*. The Secretary of the Committee shall acknowledge receipt of each properly prepared inquiry and shall provide a written response to the inquirer upon completion of the requested action by the Committee.

ASMENORMDOC.COM : Click to view the full PDF of ASME RTP-1 2019

MANDATORY APPENDIX M-12
DUAL LAMINATE VESSELS

M12-100 INTRODUCTION

This Appendix includes the following:
Article A General Requirements
Article B Materials
Article C Design
Article D Fabrication
Article E Inspection and Test
Article F Shipping and Handling
Article G Shop Qualification
Article H Qualification of Welders
Article I Glossary

ARTICLE A
GENERAL REQUIREMENTS

M12A-100 SCOPE

(a) This Appendix describes fabrications that utilize a structural member that shall be fabricated in accordance with ASME RTP-1 and is lined with thermoplastic as specified in the UBRS. The thermoplastic sheet liner serves as the primary corrosion barrier and either replaces or augments the corrosion-resistant barrier. For calculation purposes, the thermoplastic liner shall not be considered in structural design of the fabrication.

(b) Equipment composed of a thermoplastic lining inside an RTP structural member is commonly called a *dual laminate* structure.

(c) This Appendix specifies rules for the fabrication of a dual laminate where use of a thermoplastic lining material is selected for special applications, e.g., containment of aggressive corrosives, of ultra-pure fluids such as deionized water, or of pharmaceutical chemicals, and/or for abrasive service.

(d) Special bonding materials and preparation procedures are required to ensure satisfactory bonding of the RTP structural laminate to the thermoplastic lining.

(e) This Appendix specifies requirements for qualifying personnel to weld the thermoplastic materials in order to provide continuous leak/void-free corrosion- and abrasion-resistant liners that conform to the requirements of this Standard.

(f) This Appendix lists the procedures for end user/customer inspection and quality assurance to meet the requirements for thermoplastic lined RTP equipment.

M12A-200 APPLICATION LIMITATIONS

Thermoplastic lined vessels certified by the Fabricator as conforming to this Standard shall be lined only with those thermoplastics described in Table M12B-1. Note that the ASTM specifications in Table M12B-1 provide the minimum material specifications.

ARTICLE B
MATERIALS

M12B-100 SCOPE

This Article defines the thermoplastic lining materials that are used to fabricate dual laminate equipment, including the joining or welding materials and the bonding materials to bond the thermoplastic lining to the RTP structure. Bond strength requirements are also included. The RTP structural layer shall be in accordance with Part 2 of this Standard.

M12B-200 THERMOPLASTIC LINING MATERIALS (19)

Thermoplastics are used as corrosion-resistant linings in dual laminate constructions. These materials are described in Tables M12B-1 and M12B-2. Table M12B-1 contains the ASTM specifications for materials used in this Standard. Table M12B-2 contains typical physical and mechanical properties for general comparisons. For purposes of design and selection, the thermoplastic manufacturer's property data shall be used. Although most thermoplastic sheet materials are supplied as individual flat sheets, some sheet materials may be supplied as rolls. In this standard, *sheet* material is intended to mean both flat sheets and sheets supplied as rolls. Thermoplastics used to construct the liner shall not contain regrind. Thickness shall be as follows:

(a) Nominal lining thickness shall be from 0.08 in. to 0.20 in. (2.0 mm to 5.0 mm). The appropriate thickness for an application is a balance between thicker linings, which allow less permeation, and thinner linings, which result in less internal stress during forming.

(1) Lining thicknesses from 0.06 in. to 0.08 in. (1.5 mm to 2.0 mm) may be used if the Fabricator has qualified in that thickness prior to fabricating a vessel.

ASMENORMDOC.COM : Click to view the full PDF of ASME RTP-1 2019

Table M12B-1 ASTM Specifications for Thermoplastic Polymers

Material	Applicable ASTM Material Specifications
PP	D4101 Group 1, Class 1, Grade 1; Group 1, Class 1, Grade 2; or Group 1, Class 2, Grade 0
PP copolymer	D4101
PVC	D1784 Cell Class 12454, D1593, D1927, D2241, and D1785
CPVC	D1784 Cell Class 23447, 24446, and 24448
PVDF homopolymer	D3222
PVDF copolymer	D5575
ECTFE	D3275
ETFE	D3159
FEP	D3368
TFE	D1457, D4895, D3293, and D3294
PFA	F3307
HDPE	D1248 and D3350

(2) Linings over 0.20 in. (5.0 mm) may be used, but special design calculations shall be performed [see para. M12C-500(a)].

(b) The thickness of a thermoplastic material with a fiber backing is defined as the thickness from the process side to the beginning of the impressed fibers, i.e., the fiber-free thickness.

(c) Thermoplastic shapes used as components welded to dual laminate vessels include pipes, ducts, rectangular tubes, angles, flange faces, reinforcement pads, abrasion pads, etc. The thickness of shapes shall not be less than the liner thickness. As in sheet, fiber backed shape thickness is defined as the fiber-free thickness.

M12B-300 FIBER BACKING MATERIALS

(a) Fibers embedded in the back of the thermoplastic provide a suitable bonding mechanism. Typically these fibers are partially embedded in the back of the thermoplastic, with the balance of the fibers protruding from the surface. Examples of fiber backing materials are glass fibers, polymer fibers, and carbon fibers.

(b) Formed parts such as knuckle radii, flanged and dished heads, and nozzle flares shall not be restrained by the backing fabric.

M12B-400 WELDING AND JOINING MATERIALS

(a) Weld rods, cap strips, extrusion welding materials, and sheet lining shall have mechanical and chemical resistance properties acceptable for intended application.

(b) Some welding materials may be susceptible to moisture and shall be stored as recommended by the manufacturer.

M12B-500 FILLER MATERIALS, PIGMENTS, PROCESSING AIDS, AND CONDUCTIVE MATERIALS

(a) The thermoplastic manufacturer shall be agreed on by the Owner/User. The Fabricator shall provide manufacturer's data and certification documentation.

(b) Thermoplastic sheet incorporating stabilizers shall be provided if required by the UBRS or other User's specification.

(c) Plasticizer, including those used as a processing aid, shall be disclosed by the thermoplastic materials supplier. This information shall be used to assess chemical compatibility and potential for contamination from the sheet lining.

(d) Conductive materials for high voltage spark testing targets shall be suitable to provide a conductive path for leak detection. Typically this will consist of powdered carbon or flake graphite mixed into the RTP resin or of conductive carbon, conductive graphite, or modified conductive polyester veil in the resin applied next to the thermoplastic lining.

M12B-600 MATERIALS RECEIVING PROCEDURES (19)

(a) All inspections and tests specified in paras. M12B-610, M12B-620, M12B-630, M12B-640, and M12B-650 shall be performed by the Fabricator, the Manufacturer, or an independent testing laboratory.

(b) Inspections involving visual observations, a suitable inspection environment and adequate lighting for inspection shall be provided. The equipment used shall not introduce contamination to the material during inspection and testing.

(c) Inspections requiring linear measuring tools, a standard linear tool (longer than the length to be measured) should be used. The tool shall have a minimum accuracy of ±0.06 in. (±1.5 mm).

(d) In lieu of performing the above manufacturing inspections, measurements, and documentation, the Fabricator shall provide the User or User's Agent with a Certificate of Compliance from the material manufacturer. This Certificate shall verify that materials were manufactured, inspected, and tested per the material supplier's specifications. This does not apply to inspections required in M12B-614.2(b).

M12B-610 Thermoplastic Sheet

M12B-611 Introduction. This section specifies the minimum inspections, tests, and acceptance criteria that shall be performed on sheets or rolls of thermoplastic material with or without backing.

ASMENORMDOC.COM : Click to view the full PDF of ASME RTP-1 2019

(19)

Table M12B-2 Typical Thermoplastic Polymer Properties

		Mechanical Properties				Thermal Properties		
Material	Density, g/cm^3	Tensile Strength, ksi (MPa)	Tensile Modulus, ksi (MPa)	Elongation, %	Yield Strength, ksi (MPa)	HDT at 66 psi (0.46 MPa)	Linear Thermal Expansion Coefficient, 10^{-5}/°F (10^{-5}/°C)	Thermal Conductivity, Btu/ft^2-hr-°F/in. (W/m·K)
HDPE	0.94–0.96	2.7–4.6 (19–32)	116–160 (800–1100)	10–1,000	2.6–3.8 (18–26)	175–196 (79–91)	9–12 (16–21)	2.6–2.9 (0.38–0.43)
PP								
Homopolymer	0.91–0.92	4.4–6.0 (30–41)	160–189 (1100–1300)	20–800	4.4–5.2 (30–36)	225–250 (107–121)	8–10 (14.0–18.0)	1.4–1.7 (0.2–0.25)
Copolymer	0.90–0.91	3.5–5.5 (24.0–38.0)	145–218 (1000–1500)	>200	3.5–4.5 (24–31)	130–140 (54–60)	8–10 (14.0–18.0)	1.5–1.8 (0.22–0.26)
PVC-U	1.38–1.44	6.0–7.5 (41–52)	430–580 (2960–4000)	15–30	7.3–8.7 (50–60)	149 (65)	3.3–5.6 (6.0–10.0)	1.1–1.2 (0.16–0.18)
CPVC	1.46–1.54	7.0–9.0 (48–62)	340–435 (2340–3000)	10–180	7.0–9.0 (48-62)	212–247 (100–119)	3.3–5.6 (6.0–10.0)	0.81 (012)
PVDF								
Homopolymer	1.75–1.79	4.5–8.3 (31–57)	203–348 (1400–2400)	20–200	6.5–8.3 (45–57)	260–300 (127–150)	6.7–8.0 (12.0–14.0)	1.33–1.40 (0.19–0.20)
Copolymer	1.75–1.80	2.9–7.0 (20–48)	145–220 (1000–1517)	30–600	2.9–6.0 (20–41)	118–284 (48–104)	8–10 (14.0–18.0)	0.98–1.33 (0.14–0.19)
ECTFE	1.68–1.71	6.5–8.3 (45–57)	203–304 (1400–2100)	250–300	4.3–4.6 (30–32)	195 (90)	5 (9)	0.95 (0.15)
ETFE	1.70–1.74	5.8–7.5 (40–52)	130–189 (900–1300)	100–400	3.6 (25)	104 (220)	4.4–7.0 (8–12)	1.40 (0.20)
FEP	2.1–2.2	3.0–4.4 (21–30)	50.0–72.5 (350–500)	240–350	1.3–1.7 (9–12)	158 (70)	5.0–6.1 (9–11)	1.40–1.69 (0.20–0.25)
PFA	2.12–2.17	3.1–4.5 (21–31)	72.5–87.0 (500–600)	275–300	1.7–2.2 (12–15)	166 (75)	7–12 (12–22)	1.33–1.70 (0.19–0.25)
TFE	2.2–2.3	2.9–5.8 (20–40)	50–109 (350–750)	140–400	1.7 (12)	250 (221)	7–12 (12–22)	1.48–1.69 (0.21–0.25)

GENERAL NOTE: Properties are at room temperature unless otherwise stated. Properties are typical values and are not to be used for design purposes. See para. M12B-200.

ASMENORMDOC.COM : Click to view the full PDF of ASME RTP-1 2019

M12B-612 Acceptance Inspection

(a) Acceptance inspection shall include inspection of sheets or rolls for proper packaging and identification, inspection for imperfections and contamination, and measurements of thickness, length, and width in accordance with acceptance requirements and limits defined in para. M12B-610.

(b) The thermoplastic sheet manufacturer shall specify acceptable weld materials.

(c) The form shown in Form M12B-3, or a similar form that contains the provisions to record the results of these required inspections, should be used by the Fabricator and shall be retained in the inspection records. A separate form shall be used for each sheet/roll manufacturer, sheet nomenclature, backing material, and unit thickness.

M12B-613 Equipment and Measuring Tools Required

(19) **M12B-613.1 Thickness Measuring Tools**

(a) A standard micrometer with minimum accuracy of ±0.001 in. (±0.025 mm) is required. The throat should allow thickness measurements at least 1 in. (25 mm) in from the edge of the sheet.

(b) Alternative tools are an ultrasonic thickness tester or a microscope equipped with a calibrated filar eyepiece that measures across a properly prepared cross section of the sheet. These measuring tools shall have an accuracy of ±0.001 in. (±0.025 mm) and shall be calibrated to demonstrate this accuracy with the specific thermoplastic material being measured.

(c) In order to measure the thickness of a fiber-backed sheet using a micrometer, the embedded fibers on the fiber-backed side of the sheet shall be removed.

NOTE: A tool such as an appropriate hand scraper or a wood plane is suggested.

M12B-613.2 Linear Measuring Tools. See para. M12B-600(c). For rolls of thermoplastic sheet, the length measurement may be made if desired by the Fabricator.

M12B-613.3 Bond Strength Measuring Tools

(a) The testing machine shall measure the load within 1% accuracy of the applied load. The testing range shall be selected so that the maximum load on the specimen falls between 15% and 85% of full scale capacity according to ASTM D1781.

(b) The Fabricator or independent testing laboratory shall have the apparatus and sample holders required to perform the bond strength tests.

M12B-613.4 High Voltage Spark Test. An acceptable high voltage spark tester shall be used (see para. M12D-500). The Fabricator shall have a documented spark test procedure. A written report of the spark testing shall be retained by the Fabricator and available for the Owner/User. The report shall include details of the spark test including the operator/tester's name, date and time of testing, test voltage, method and frequency of verification of voltage calibration/verification, and location/number of pinholes detected. Location of pinholes should be documented on the weld map. Repair and retesting shall be documented in the test document.

M12B-614 Procedures and Acceptance Limits

M12B-614.1 Sheet Identification and Package Inspection

(a) Verify on the inspection record that the sheet or roll as identified by the manufacturer has the same nomenclature as the sheet specified, and is the same material and ASTM specification as listed in Table M12B-1. Examine the packaging of the sheet for damage that renders the sheet unusable. Indicate acceptable sheet by recording the date and name of the person performing the examination in Form M12B-3, column 4.

(b) For packaged sheets that are acceptable for further inspection and tests, enter the sheet production date and lot number in Form M12B-3, columns 2 and 3.

M12B-614.2 Visual Inspection of Thermoplastic Sheet or Roll

(a) The thermoplastic material shall be visually inspected for imperfections and contamination prior to use by the Fabricator. The defects and criteria listed in Table M12B-4 will be used.

(b) Fiber backing shall be visually inspected for adequate embedding, mechanical damage, dryness, and contamination. The damage or removal of a protective film shall be noted. Sheet backing that contains moisture shall be dried and used only if the backing is polyester or acrylic fiber; all other fibers that show evidence of having moisture shall be cause for rejection of the thermoplastic sheet. Any sheet backing that has been exposed to any other contaminants shall be rejected.

(c) The date and inspector's name shall be recorded after inspection in Form M12B-3, column 7. All defects found that are cause for rejection shall be recorded. The reason for the rejection shall be recorded under the comments section in Form M12B-3.

(d) Areas of sheets that have defects greater than allowed in Table M12B-4 shall not be repaired and shall not be used.

M12B-614.3 Sheet Thickness

(a) Sheet thickness shall be measured at a minimum every 6 in. (150 mm) across the width of the sheet edge. Measurements should be made using a caliper micrometer or ultrasonic thickness tester, or using a microscope and measuring across a cross section using a filar eyepiece. Any measurement not within the requirements of (c) is cause for rejection. The minimum/

ASMENORMDOC.COM : Click to view the full PDF of ASME RTP-1 2019

(19)

Form M12B-3 Thermoplastic Sheet or Roll Receiving Log

Fabricator's name _____ Manufacturer _____

Address _____ Nomenclature _____

_____ Backing material and type of weave or felt _____

Shop order no. _____ Manufacturer's label thickness _____

1	2	3	4		5	6		7		8		9
Sample	Production Date	Lot, Batch, or Production Run	Packaging Inspection		Thickness	Dimensions Measured		Visual Inspection		Bond Strength Measured		Comments
			By	Date		By	Date	By	Date	By	Date	

Comments on visual and packaging inspection (indicate which sheet or roll):

_____

_____

GENERAL NOTE: This form may be reproduced and used without written permission from ASME if used for purposes other than republication.

ASMENORMDOC.COM : Click to view the full PDF of ASME RTP-1 2019

Table M12B-4 Thermoplastic Sheet Visual Inspection Acceptance Criteria

Imperfection Name	Definition of Imperfection	Maximum Size or Amount of Imperfection Allowed
Foreign inclusions	Particles in the sheet that are not of the plastic or backing composition	None
Surface pits	Small crater or hole in the surface of the sheet	None deeper than one-tenth of the sheet thickness nor larger than $\frac{1}{32}$ in. (0.80 mm); no more than 4 per any 12 in. × 12 in. (300 mm × 300 mm) area
Scratches	Willow marks, grooves, furrows, or channels caused by mechanical damage	None deeper than 0.005 in. (0.13 mm) nor more than 4 in. (100 mm) long
Dents, chips	Impressions from impact or small pieces broken out of surface	None deeper than one-tenth of the sheet thickness
Blisters (internal)	Pores within sheet	None
Wrinkles	Uneven surface from distortion of the sheet	None
Cracks	Linear fissures	None
Orange peel	Surface texture resembling the surface of oranges	None
Burned particles, lumps, delaminations	...	None
Color	...	Uniform to the eye
Damage to fiber backing	Snags, tears, knots	None

maximum measurement shall be entered in Form M12B-3, column 5. After other dimensions are entered, the inspector shall enter the date and his/her name in column 6 if all measurements are within the requirements of this Standard.

(b) Sufficient measurements should be made to ensure that all of the material used is within thickness requirements. Measurements across two widths at each end and at least every 50 ft (15 m) of length shall be made and recorded.

(c) The sheet's measured fiber-free thickness shall be ±10% of the specified nominal fiber-free thickness.

M12B-614.4 Bond Strength Requirements

(a) Bond strength tests must be conducted on each production run of thermoplastic material intended for lining in dual laminates. The bonded sample will be made using the RTP resin specified and the laminating technique to be used in the vessel to be fabricated. The thickness of the RTP laminate structure will be that thickness compatible with the selected bond strength test method.

(b) When a bonding resin is used, the bonding resin used to generate bond test samples will be the same bonding resin used to fabricate the vessel.

(c) Bond strength tests must be performed with the conductive target in place over the entire test sample.

(d) The minimum bond strength results (excluding nozzle necks) are as follows:

(1) for the climbing drum test, ASTM D1781, the bond strength must be at least 50 in.-lb/in. (220 N·mm/mm)

(2) for the lap shear test, ASTM D3846 or BS 4994 B-10, the bond shear strength must be at least 1,015 psi (7 MPa)

(e) Separate records will be kept for each bond strength test accomplished. Results will be maintained in the Quality Control Log and the test operator will enter his/her initials and the date the test was made in Form M12B-3, column 8. Test results lower than the values in (d) will be entered in Form M12B-3 in the comments section and will be cause for rejection of that material.

M12B-614.5 Disposition of Nonconforming Material. Sheets with defective areas may be cut, routed, or sheared to remove and discard the defective areas. Care must be used in handling cracked or crazed sheets, as mechanical treatments may cause the crack to propagate. After eliminating areas with defects, the remaining material may be used.

M12B-620 Welding Consumables

M12B-621 Introduction. This section describes the minimum inspections, tests, and acceptance criteria to be performed on thermoplastic welding consumables used for filler materials in welding thermoplastic material to fabricate equipment to this Standard. Consumables include weld rod, continuous coils of weld "wire," cap strips, and extrusion weld materials.

M12B-622 Acceptance Inspection

(a) Acceptance inspection will include inspection of welding materials for proper packaging and identification, inspection for imperfections and contamination, and measurement of dimensions. Acceptance requirements

ASMENORMDOC.COM : Click to view the full PDF of ASME RTP-1 2019

and limits are defined in paras. M12B-624.1 through M12B-624.3.

(b) The manufacturer of the sheet to be used will certify that the weld materials are acceptable.

(c) The form shown in Form M12B-5, or a similar form that contains the provisions to record the results of these required inspections, will be used by the Fabricator and will be retained in the inspection records. A separate form will be used for each kind of weld material and for each manufacturer.

M12B-623 Equipment and Measuring Tools Required

M12B-623.1 Inspection Table and Lights. See para. M12B-600(b).

M12B-623.2 Dimensional Measuring Tools. A standard micrometer or caliper capable of measuring with an accuracy of at least ±0.001 in. (±0.025 mm) is required.

M12B-624 Procedures and Acceptance Limits

M12B-624.1 Welding Material Identification and Package Inspection

(a) The welding materials will not be repackaged during the distribution of the materials after the manufacturer has shipped the materials. Verify and enter on the inspection record that the welding materials as identified by the manufacturer have the same nomenclature as the materials specified to produce the equipment. For cap strips, indicate in Form M12B-5, column 1 whether the strip has a fiber backing and the kind of backing. Examine the packaging of the welding materials for damage that renders the materials unusable. Indicate acceptable welding materials by recording the date and name of the person performing the inspection in Form M12B-5, column 4.

(b) For welding material lots found acceptable, enter the material's production date and lot number in Form M12B-5, columns 2 and 3.

M12B-624.2 Visual Inspection of Welding Consumables

(a) The welding materials will be visually inspected for imperfections and contamination prior to use by the Fabricator.

(b) The limits of imperfections found are as follows:

(1) No foreign materials, including water, other fluids, or particles, are allowed.

(2) Color of all welding materials in a given lot will be uniform.

(3) There will be no bends or other irregularities in shape, including variations in cross section.

(4) There will be no porosity or bubbles.

(5) Surface will be smooth with uniform appearance.

(c) After visual inspection, record the date and the inspector's name in Form M12B-5, column 5. If any defect is found that is cause for rejection, record the reason in Form M12B-5, column 7.

M12B-624.3 Dimensions Inspection

(a) The diameter of each rod or coiled welding "wire" and the widths and thicknesses of other shapes will be measured. The results of these measurements will be entered in Form M12B-5.

(b) The inspector performing dimension measurements will enter his/her initials and the inspection date in Form M12B-5.

M12B-630 Bonding Resin

M12B-631 Introduction. The bonding resin for bonding PVC or CPVC to the RTP structure is applied to the thermoplastic, which promotes a chemical bond to both the thermoplastic and the RTP overlay.

M12B-632 Acceptance Inspection (19)

(a) Acceptance inspections include inspection of the containers of bonding resin for proper packaging and identification, for evidence of damage to the resin or its container, verifying that the label on the container is correct, and the testing for bonding strength. Acceptance requirements and limits are defined in paras. M12B-634.1 and M12B-634.2.

(b) The form shown in Form M12B-6, or a similar form that contains the provisions to record the results of these required inspections, shall be used by the Fabricator and shall be retained in the inspection records. A separate form shall be used for each lot of bonding resin received.

(c) The bonding resin shall be tested for bond strength in accordance with para. M12B-634.2.

M12B-633 Equipment and Measuring Tools Required. See para. M12B-600(b)for inspection table and lights.

M12B-634 Procedures and Acceptance Limits

M12B-634.1 Resin Identification and Packaging Inspection

(a) The resin will be packaged as shipped from the resin manufacturer's factory. The resin will not be repackaged in the distribution of the materials after the resin manufacturer has shipped the resin. Verify and enter in the inspection record that the resin as identified by the resin manufacturer has the same nomenclature as the resin specified to bond the thermoplastic as specified in the UBRS and the thermoplastic manufacturer's instructions. Examine the packaging for damage that renders the resin unusable. Indicate acceptable lots of resin by recording the date of manufacture and the name of the person performing the examination in Form M12B-6, column 4.

ASMENORMDOC.COM : Click to view the full PDF of ASME RTP-1 2019

(19)

Form M12B-5 Welding Material Receiving Log

Fabricator's name _____ Manufacturer _____

Address _____ Nomenclature _____

_____ Material shape _____

_____ Nominal dimensions _____

1	2	3	4		5		6	7
Welding Material No.	Production Date	Lot, Batch, or Production Run	Packaging Inspection		Visual Inspection		Dimensions	Comments
			By	Date	By	Date		
1								
2								
3								
4								
5								
6								
7								
8								
9								
10								
11								
12								
13								
14								

GENERAL NOTE: This form may be reproduced and used without written permission from ASME if used for purposes other than republication.

ASMENORMDOC.COM : Click to view the full PDF of ASME RTP-1 2019

(19)

Form M12B-6 Bonding Resin Receiving Log

Fabricator's name _____ Manufacturer _____

Address _____ Nomenclature _____

_____

1	2	3	4		5		6
Number	Production Date	Lot, Batch, or Production Run	Packaging Inspection		Bond Strength Test Results [Note (1)]		Comments
			By	Date	By	Date	
1							
2							
3							
4							
5							
6							
7							
8							
9							
10							
11							
12							
13							

GENERAL NOTE: This form may be reproduced and used without written permission from ASME if used for purposes other than republication.

NOTE: (1) Indicate test used: C = climbing drum, P = peel test, L = lap shear test.

ASMENORMDOC.COM : Click to view the full PDF of ASME RTP-1 2019

(b) For lots of resin that are found to be acceptable for further inspection and tests, enter the resin production date and lot number in Form M12B-6, columns 2 and 3.

M12B-634.2 Bond Strength Measurement. The bonding resin will be tested for bonding strength in accordance with the provisions of paras. M12B-613.3 and M12B-614.4. At least one bond strength test will be performed for each lot of bonding resin received. The results will be entered in Form M12B-6, column 5. Lots of resin that fail to meet the acceptance requirements will not be used and a comment noting the failure to meet the acceptance limits will be entered in Form M12B-6, column 6.

M12B-640 Conductive Spark Test Targets

M12B-641 Introduction. Conductive material is used to provide an electrically conductive layer behind the thermoplastic lining and behind the weld joints in order to allow valid high voltage spark tests to evaluate the integrity of the weld joints and the thermoplastic sheet. Conductive materials for high voltage spark testing targets will consist of powdered carbon or flake graphite mixed into the RTP resin, or of conductive carbon, conductive graphite, or modified conductive polyester veil in the resin, applied next to the thermoplastic lining. If powder is used, it is mixed in the resin in sufficient quantity so that the cured resin is conductive enough for spark testing. This resin mixture is then applied directly to the thermoplastic and entrapped air is removed. The fiber forms of carbon or polyester are laid into resin already applied to the back of the weld or sheet. The conductive fiber mixture is then rolled, or otherwise treated, to remove entrapped air bubbles.

CAUTION: Some carbon and graphite materials can inhibit resin cure.

M12B-642 Acceptance Inspection

(a) Acceptance inspection will include inspection of the packaging and identification, and measurement of electrical conductivity of samples of resin mixed with a specific amount of carbon or graphite, or samples of resin and conductive polyester mixtures, used to generate the conductive target.

(b) The form shown in Form M12B-7, or a similar form that contains the provisions to record the results of these required inspections, will be used by the Fabricator and will be retained in the inspection records. A separate form will be used for each carbon, graphite, or polyester manufacturer and for each carbon, graphite, or polyester nomenclature.

M12B-643 Equipment and Measuring Tools Required

M12B-643.1 Inspection Table and Lights. See para. M12B-600(b).

M12B-643.2 Small Scale Resin Mixing Area. A table or other adequate space will be allocated to the preparation of a sample of the graphite–resin mixture. Preparation equipment will consist of at least weighing scales, mix pail or bucket, and casting mold or equivalent for shaping the sample to a small slab approximately 0.06 in. (1.5 mm) thick.

M12B-643.3 Electric Conductivity Measuring Device. A high voltage spark tester with adjustable voltage is required. See para. M12D-500 for details of this test method.

M12B-644 Procedures and Acceptance Limits

M12B-644.1 Conductive Material Identification and Package Inspection

(a) The conductive materials will be packaged as shipped from the manufacturer's factory. They will not be repackaged in the distribution of the material after the manufacturer has shipped the material. Verify that the material as identified by the manufacturer has the same nomenclature as the material required by the UBRS.

(b) The conductive material packaging will be examined for damage that renders the material unusable. Indicate acceptable lots by recording the date and name of the person performing the inspection in Form M12B-7, column 4.

(c) For packaged lots that are found to be acceptable for further inspection and test, enter the material production date and lot number in Form M12B-7, columns 2 and 3.

M12B-644.2 Conductivity of Resin-Conductive Material Samples

(a) A sample of the conductive material is mixed with the resin to be used in the RTP structure. The sample will have the same content of conductive material as will be used in the fabrication of targets on the fabricated vessel. The sample will be cast or formed by appropriate means to about 0.06 in. (1.5 mm) thick and at least 8 in. (200 mm) long. All air bubbles will be removed; then the sample will be cured.

(b) The conductivity of the sample will be tested by using a high voltage spark tester at the same voltage as will be used on the welded thermoplastic in the finished vessel. The conductive sample will be tested directly by exposing the high voltage probe over the sample. Alternatively, the sample may be placed under the joint between two pieces of the thermoplastic sheet, also at least 8 in. (200 mm) long, which are butted up to one another with a very tight fit and clamped so the three pieces are immobile. The high voltage test will then be made on the top of the thermoplastic using the pointed probe and using the voltage required for the thickness of thermoplastic used.

ASMENORMDOC.COM : Click to view the full PDF of ASME RTP-1 2019

(19)

Form M12B-7 Conductive Material Receiving Log

Fabricator's name _____

Address _____

_____

_____

Carbon/graphite manufacturer _____

Powder nomenclature _____

Fabric type nomenclature _____

1	2	3	4		5		6
Conductive Material No.	Production Date	Lot Number	Packaging Inspection		Conductivity Test		Comments
			By	Date	By	Date	
1							
2							
3							
4							
5							
6							
7							
8							
9							
10							
11							
12							
13							
14							

Comments on visual and packaging inspection and conductivity test (indicate which lot):

_____

_____

GENERAL NOTE: This form may be reproduced and used without written permission from ASME if used for purposes other than republication.

ASMENORMDOC.COM : Click to view the full PDF of ASME RTP-1 2019

(c) The test must produce a bright spark distance nearly the same distance as a test to an excellent ground. In the case that the high voltage test does not produce the normal audible sound or nearly the same spark distance as to a good ground, the sample will be deemed as not having adequate conductivity and that lot of conductive material will be rejected.

M12B-650 Thermoplastic Shapes for Vessel Components

M12B-651 Introduction. This section specifies the minimum inspections and tests that are to be performed on thermoplastic shapes that become part of the fabricated vessel that is to be fabricated to this Standard. Thermoplastic shapes include pipe, duct, plate, angle, rod, or rectangular tubes and other thermoplastic materials that are intended to become part of the vessel. These shapes could become nozzle necks, baffles, baffle braces, dip tubes, supports for internal components, etc.

Adhesion to nozzles, piping, and fittings may be achieved by alternate surface treatments.

M12B-652 Acceptance Inspections

(a) Acceptance inspections shall include inspection of the shapes for proper packaging and identification, inspection for imperfections and contamination, and dimensional measurements. Acceptance requirements and limits are defined in paras. M12B-654.1 through M12B-654.3.

(b) The form shown in Form M12B-8 or a similar form that contains the provisions to record the results of inspections, shall be used by the Fabricator and shall be retained in the inspection records. A separate form shall be used for each shape manufacturer and for each different size and shape.

(c) These inspections may be waived if the materials come from an ISO-certified manufacturing facility and are accompanied by a manufacturer's material certificate.

M12B-653 Equipment and Measuring Tools

M12B-653.1 Inspection Table and Lights. See para. M12B-600(b).

M12B-653.2 Linear Measuring Tools. See para. M12B-600(c). A standard caliper or micrometer accurate to ±0.001 in. (±0.025 mm) is required to measure the thickness of thermoplastic shapes.

M12B-654 Procedures and Acceptance Limits

M12B-654.1 Shape Identification and Package Inspection

(a) The Fabricator shall verify and enter on the inspection record that the shapes as identified by the thermoplastic manufacturer have the same nomenclature as the shapes specified to produce the vessel, examine the packaging of the shapes for damage that renders the shapes unusable, and indicate acceptable shapes by recording the date and name of the person performing the examination in Form M12B-8, column 4.

(b) For shapes that are found to be acceptable for further inspection and tests, the Fabricator shall record the date of receipt and lot number in Form M12B-8, columns 2 and 3.

M12B-654.2 Visual Inspection of Thermoplastic Shapes

(a) Shapes shall be visually inspected upon receipt or when the shapes are used. This inspection shall be for imperfections and contamination. The date and the name of the person performing visual inspection shall be recorded by the Fabricator in Form M12B-8, column 6. If any shape is rejected, the reason shall be recorded under the comments section in Form M12B-8.

(b) Thermoplastic shapes having any of the following defects shall not be used for components of vessels made to this Standard:

(1) visible contaminants, either inside the shape or embedded in the surface, 0.06 in. (1.5 mm) or larger in size

(2) surface dents other than surface depressions with depth more than 10% of thickness

(3) scratches and sharp indentations

(c) Surface defects may be repaired to conform to the above requirements, as long as thickness limitations are not exceeded.

M12B-654.3 Measurement of Thermoplastic Shape Dimensions

(a) Thickness of each shape shall be measured in at least two places. Thickness shall be within ±10% of the nominal dimensions.

(b) Shape dimensions other than thickness shall be measured, and all shall be less than ±0.06 in. (±1.5 mm) of the nominal dimensions.

(c) The Fabricator shall record all measurements and indicate in Form M12B-8, column 5 the date and the name of the person performing the measurements.

M12B-654.4 Weldability. The Fabricator shall verify weldability of thermoplastic shapes prior to use by welding the shape to the sheet and evaluate visually for mechanical integrity. The Fabricator shall indicate in Form M12B-8 that a weldability test has been performed.

ASMENORMDOC.COM : Click to view the full PDF of ASME RTP-1 2019

(19)

Form M12B-8 Thermoplastic Shape Receiving Log

Fabricator's name _____ Manufacturer _____

Address _____ Nomenclature _____

_____ Description _____

_____

1	2	3	4		5		6		7		8
Shape	Production Date	Lot, Batch, or Production Run	Packaging Inspection		Dimensions Measured		Visual Inspection		Weldability		Comments
			By	Date	By	Date	By	Date	By	Date	

Comments on visual and packaging inspection (indicate which shape):

_____

_____

GENERAL NOTE: This form may be reproduced and used without written permission from ASME if used for purposes other than republication.

ASMENORMDOC.COM : Click to view the full PDF of ASME RTP-1 2019

ARTICLE C
DESIGN

M12C-100 SCOPE

Article C sets forth special design rules and guidelines for the thermoplastic lining in order to produce a high-quality lining with sufficient strength to avoid failure of the lining or failure of the bond between the lining and the RTP structure.

This Article contains special requirements for sheet layout, for forming the thermoplastic sheet, for internal attachments, for nozzle attachments, and for management of thermal stresses, and guidelines for material selection.

M12C-200 MATERIAL SELECTION

The following factors will be considered for proper material selection for a lining application:

(a) chemical resistance at the temperature of operation and at maximum design temperatures.

(b) the potential for environmental stress cracking, considering

(1) the fluids contacted including cleaning and other incidental fluids

(2) design conditions including the residual and operational stresses and the exposure temperature.

(c) thickness. The lining will be thick enough so that permeation will be low to minimize chemical exposure to the RTP structure. However, the lining will not be so thick that anticipated forming processes during fabrication will cause damaging stresses and possible failure.

(d) temperature-creep limitations for the bonding resin. A guideline limit is that the HDT [66 psi (0.455 MPa)] of the bonding resin will be at least 36°F (20°C) greater than the maximum design temperature of the vessel.

(e) the need for stress relief in the case of high residual stresses from forming or welding, which could cause cracking or other failure mode in service.

(f) residual stresses in the received sheet and the need for stress relief prior to fabrication.

M12C-300 SHEET MAP AND WELD PLACEMENT

(a) Prior to fabrication, a sheet map will be generated showing the lining in detail. All sheet sizes will be identified. The heads of vessels will be laid out, showing the extent of cold forming or thermoforming and the weld locations.

(b) The sheet map will show the location of all welds and the type of each weld, e.g., hot gas weld, extrusion weld, cap strip weld.

(c) The sheet placement will be such that there are no four-corner weld intersections. Sheets will be staggered to avoid any such intersections.

(d) Welds in knuckle radii that are parallel to the centerline of the knuckle radius will not be allowed except for nozzle penetrations.

(e) If possible, nozzles will not be placed through a weld seam.

(f) Nozzle design and weld detail will be shown on separate drawings. These drawings will show nozzle location, internal attachment details, flange details, and weld details.

(g) For ledges, see the limit on circumferential welds in para. M12C-400(e).

M12C-400 WALL ATTACHMENTS

(a) During design stages, every effort will be made to support all internal appurtenances by the RTP structure. Internal attachments to the inside of a vessel will not be attached solely to the thermoplastic lining.

(b) As a last resort, if the thermoplastic lining must provide support for an internal attachment, the following types of conditions must be analyzed and designed to meet the following limitations:

(1) the operating stresses imposed on the lining will not exceed 10% of the ultimate strength of the liner material at design temperature

(2) the operating stresses on the lining–RTP bond will not exceed 10% of the ultimate shear stress for the lining-RTP bond

(3) long-term weld factors will be used in all calculations; strength and degradation of welds over time at operating temperatures will be considered.

(c) Baffles and dip pipe supports are typical attachments requiring welding to the thermoplastic lining. These and other appurtenances attached only to the lining will be designed separately and the results will be set forth on separate drawings showing stress calculations; attachment details, including supports and braces; and weld details.

(d) In designing attachments, the strength of the liner material at operating temperature, the reduced strength of welds due to the long-term weld factor, and the presence of high alternating stresses will be considered.

(e) Ledges will be designed with the support strength from the RTP structure under the lining. Circumferential welds will be located so that they are not part of the bends required in forming ledges (see Figure M12C-1).

(f) Reinforcement pads will be used [see para. M12D-700(c)].

M12C-500 DESIGN STRESS LIMITATIONS

(a) The thermoplastic liner will be included in the analysis but will not be considered to add to the overall strength of the structure of the vessel. For liner thicknesses over 0.20 in. (5.0 mm), design calculations will be accomplished for each material and each temperature combination anticipated.

ASMENORMDOC.COM : Click to view the full PDF of ASME RTP-1 2019

Figure M12C-1 Support Ledges Showing Recommended Weld Locations Away From Thermoformed Bends

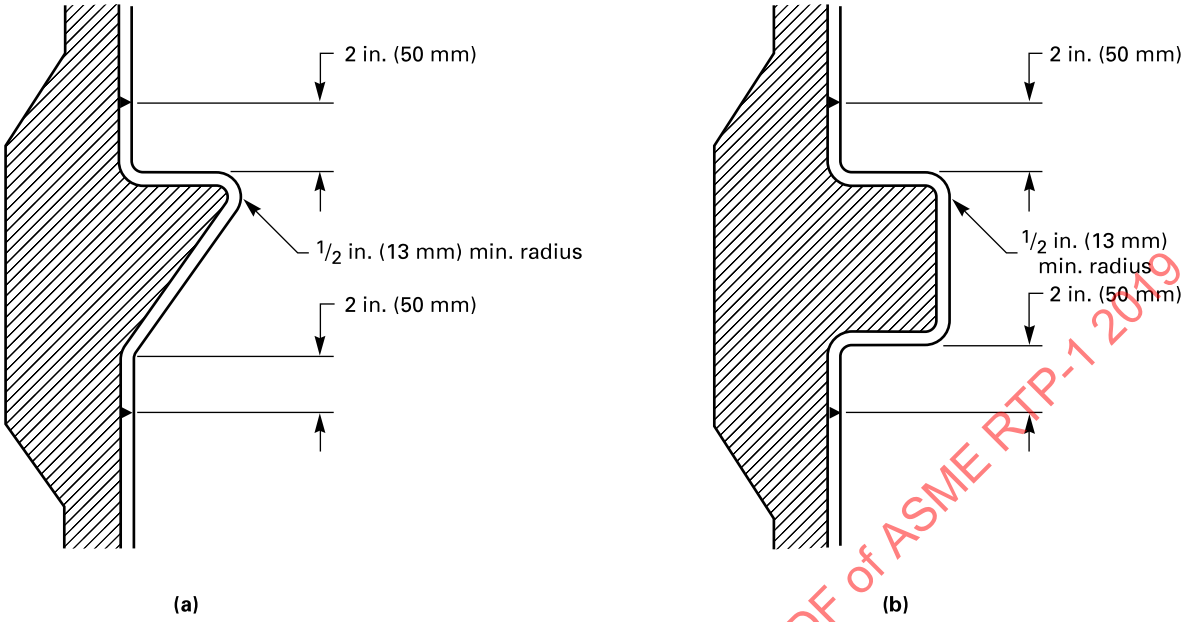

(b) Residual stresses from forming or welding can be minimized by post-stress relieving or annealing.

(c) Thermal stresses in the lining from process fluids must be considered. These stresses will be analyzed, because differential coefficients of expansion can cause high bond stresses and debonding. Bond stresses from thermal stresses must not exceed 100 psi (0.7 MPa) in shear. If the bond shear strength at operating temperature is known, thermal stresses must not exceed 10% of this bond shear strength except that thermal stresses will in no case exceed 100 psi (0.7 MPa). In addition, thermal gradients can promote diffusion beyond expected levels. One technique to reduce thermal gradients across the lining is to use external thermal insulation. Analysis of the amount of reduction in gradients is necessary to evaluate the benefits of the use of insulation. Another technique to reduce these high delamination stresses is to use a flexible resin between the lining and the RTP structure; however, the mechanical and thermal properties of flexible resins are usually inferior and must be considered in design calculations.

(d) Forming of sheets into vessel shapes can introduce high internal stresses, which can cause cracking, warping, and possibly environmental stress cracking in service. Thermoforming above the softening temperature will reduce these residual stresses. Post-stress relieving (annealing) may be required. Cold forming may be used, especially for thin linings, but the resulting high internal stresses will be considered.

M12C-600 HEATING AND COOLING DESIGNS

(a) The heating system for the contents of a dual laminate vessel will be designed to avoid any damage to the vessel. The preferred heating design is to use an external heat exchanger with inlet and outlet nozzles on the vessel. Internal heating coils and the inlet from the external heat exchanger must be carefully designed so that the vessel nozzles are not overheated. The heating pipe penetrating the vessel should pass through special flanges of a material that can withstand the highest temperature expected. These flanges will be installed in an oversize nozzle. In addition, the support of the internal coils must be designed carefully to avoid high wall stresses due to internal inertia from agitated contents, as well as thermal stresses due to differential thermal expansion.

(b) Cooling of the contents of a dual laminate vessel may cause damage due to cold temperature embrittlement of the plastic.

(c) Freeze protection from low ambient temperatures may be provided by wall heaters that are designed to avoid damage from high temperatures.

(d) Thermal stresses for all thermal extremes, as well as transient conditions, will be analyzed [see para. M12C-500(c)].

ASMENORMDOC.COM : Click to view the full PDF of ASME RTP-1 2019

ARTICLE D
FABRICATION

M12D-100 SCOPE AND OPTIONS

This Article sets forth the required and recommended fabrication details that are used to fabricate a thermoplastic lined RTP vessel. Where necessary, fabrication details of the RTP part of the dual laminate vessel, as modified by the requirements of the thermoplastic lining, are presented. The general provisions of Part 4 of this Standard do apply.

This Article covers the forming and welding of the vessel lining walls and ends; the installation and fabrication details for nozzles, manways, and other attachments; and the RTP modifications where changes from Part 4 are necessary due to the lining fabrication requirements.

Fabrication options are as follows:

(a) The thermoplastic lining will be fabricated before the RTP laminate is overlaid.

(b) The vessel lining is fabricated by formed (thermoforming or cold forming) components and welding them together.

(c) The end closure (or vessel head) linings may be fabricated separately from the shell lining. The RTP structure may be laid up on the separate parts or after the entire vessel lining is assembled.

M12D-200 MACHINING OF THE THERMOPLASTIC LINING

Sheets, plates, edges of heads, and other parts (internal ends or projections of nozzles, manway necks, etc.) may be cut to shape and size by mechanical means such as machining, drilling, shearing, sawing, grinding, or by other processes that are not detrimental to the lining material. After machining, all burrs, flashing, and other loose material will be removed prior to further fabrication or use. Excessive stresses may be induced by machining processes and stress relief may be required.

M12D-300 FORMING

Thermoplastic sheets may be formed into the required shapes using established procedures that are in the Fabricator's Procedures Manual (see para. M12G-540).

M12D-310 Limits on Thinning of Lining During Forming

All forming processes will reduce the thickness of the lining. Design and the forming process conditions will be such that the thinnest area of the lining after forming is at least 90% of the nominal sheet thickness.

M12D-320 Thermoforming

In general, thermoforming is preferred over cold forming because thermoforming requires much less force and the internal stresses after forming are minimized. More brittle materials and materials with greater thickness are more difficult to form and thermoforming may be necessary to avoid cracking or substantial spring-back.

M12D-400 WELDING

This section sets forth rules and guidelines for the fusion welding of thermoplastic linings to generate the vessel lining configuration. Included are welds to assemble shells, end closures, nozzles, manways, and wall attachments.

The types of welding allowed for this Standard are

(a) hot gas welding

(b) extrusion welding [but see para. M12D-421(b) for limitations]

(c) hot plate welding

(d) flow fusion welding

All welds will be full penetration welds.

M12D-410 Welder Qualification

All welds will be made by a Welder qualified in that type of welding and using that type of thermoplastic material. Procedures for Welder qualification are set forth in Article H.

M12D-420 Welding Procedures (19)

(a) The gap between lining material before welding shall be no more than 0.06 in. (1.5 mm) at any location. For assembly of large components [over 6 ft (1.8 m) in diameter], the gap shall not exceed 0.13 in. (3.0 mm) at any location. For assembly after RTP overlay, the maximum gap between lining material shall be no more than 0.13 in. (3.0 mm).

(b) Misalignment of all butt welds shall be no more than 20% of the thickness of the thermoplastic material. For lining material of different thicknesses, see Figure M12D-1.

Figure M12D-1 Maximum Offset Allowed for Joints Between Sheets With Different Thicknesses

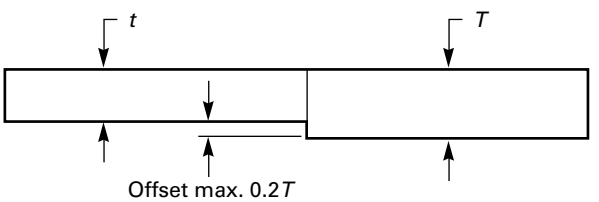

ASMENORMDOC.COM : Click to view the full PDF of ASME RTP-1 2019

Table M12D-1 Visual Weld Defects

Imperfection	Allowable
Cracks	None
Blisters	
within the thermoplastic liner	None
between the liner and the RTP laminate	None
debonding of the thermoplastic liner	None
All Welds	
Flow lines	Uniform on both sides of weld
Undercut	None
Heat-affected zone heat pattern	Same width on both sides of weld
Hot Gas Welds	
Contamination evidence by discoloration or contaminants in the flow lines	None
Crown or overbead	Relaxed and no more than half the sheet thickness above the sheet surface
Misalignment	Maximum one-fifth of sheet thickness
Bridging over at starts and stops	None
Discoloration	
charring or burning	None
brown from use of air at high temperature	None
Hot Plate Butt Fusion Welds	
Flow lines	Height of flow line extrusions does not exceed thickness of the plastic sheet
Voids in fusion zone	None
Thickness of sheet allowed	Minimum 0.09 in. (2.3 mm)
Misalignment	Maximum one-tenth of sheet thickness
Extrusion Welds	
Crown or overbead	Maximum $^1/_8$ in. (3.0 mm) above sheet thickness
Cap Strip Welds	
Flow lines	Uniform on both sides of weld; no larger than $^1/_{16}$ in. (1.5 mm)
Distortion after weld	In accordance with UBRS
Voids	None
Discoloration	No brown color
Spark test for root weld	Special test required before cap strip applied

(c) For lining material with fiber backing, the backing adjacent to the hot gas weld shall be removed a maximum distance equal to the lining material thickness from the weld bead. Fiber backing inside weld bead is not acceptable. For hot plate and flow fusion butt welding, the amount of backing removed shall not exceed 0.06 in. (1.5 mm) from the weld centerline.

(d) The Welder shall initial a copy of the lining material/weld map placement showing the welds he/she has made by the end of each day.

(e) The gap between the lining material and nozzles will be limited to the thickness of the lining material.

M12D-421 Hot Gas and Extrusion Welding

(a) The basic principles of extrusion welding and hot gas welding are similar, except that the extrusion welding rod is hot extruded using an extrusion screw.

(b) Extrusion welding will not be used on materials equal to or less than 0.13 in. (3.0 mm) in thickness.

(c) Extruder temperatures and operating conditions will be that recommended by the material manufacturer. The Welder will verify that temperature settings on the extruder machine are appropriate for the material to be welded.

(d) Before extrusion welding, the Welder will visually inspect extrudate for contamination.

(e) Weld filler materials will be compatible with the sheet to be welded. In particular, the melt flow characteristics will be compatible and the manufacturer of the sheet will specify the appropriate requirements for weld filler materials to be used.

(f) When required by the material manufacturer, rod or parent material will be sanded or scraped to remove oxidation.

(g) For hot gas welding, the gas used will be clean and dry. The gas will be tested daily for contamination. The test procedures will be those described in ASTM D4285 using an absorbent collector described in para. 3.1 of ASTM D4285. Any deposits, including foreign particles, indicate that the gas is contaminated and unacceptable.

(h) Dry nitrogen, inert gas, or air will be used for hot gas and extrusion welding as recommended by the material manufacturer.

(i) For hot gas and extrusion welding, all joints must be beveled to a V or double V shape prior to welding. For sheets up to 0.16 in. (4.0 mm) thick, a V bevel is recommended; for 0.16 in. (4.0 mm) thickness and above, a double V bevel is recommended. Typical bevel angles are 30 deg to 35 deg (60 deg to 70 deg total) for butt welds. Typical bevel angles for T welds are 45 deg to 60 deg. Exceptions are FEP and PFA welds, where V bevels for butt welds will be 15 deg to 20 deg (30 deg to 40 deg total).

(j) The hot gas welds will be visually inspected and will meet the requirements of Table M12D-1 as well as the following requirements:

ASMENORMDOC.COM : Click to view the full PDF of ASME RTP-1 2019

(1) Weld Bead

(-a) Shape. Shape will be relaxed, indicating proper flow of material; elongation or stretching indicates excessive pressure or unacceptably high speed (see Figure M12D-2).

(-b) Stretch Marks or Fractures. None allowed. These indicate that the rod was too cold or indicate excessive pressure or speed during welding.

(-c) Undercut. None allowed. These indicate rod too small for area prepared or stretching of rod during welding (see Figure M12D-2).

(-d) Bridging. None allowed. Bridging may be caused by improper temperature or pressure during starts and stops, relaxing of the rod pressure during welding, or improperly cleaning the V bevel prior to welding.

(-e) Lack of Fusion. None allowed (see Figure M12D-2).

(2) Flow Lines Evenness. Both sides of the weld bead must show continuous flow of molten material at the side of the weld bead (see Figure M12D-3).

(3) Heat-Affected Zone. Not all plastics exhibit a visual heat-affected zone (see Figure M12D-4).

(k) Extruded weld visual inspection will meet the requirements of Table M12D-1 as well as the following:

(1) Free of porosity. One cause of porosity is excessive heat during extrusion.

(2) No lack of fusion. Low temperature can cause this lack of fusion.

(3) An even bead showing no lumps, bumps, or excessive irregularities.

(4) Some surface gloss showing the existence of heat-affected zones will be visible.

(l) Safety

(1) The welding process involves more than just the handling of hot equipment and plastic. When inert gas or nitrogen is used to melt the thermoplastic, special attention to ventilation is required. In addition, some plastics may evolve fumes that can affect workers. These possible safety hazards must be considered prior to welding. Many welding procedures are performed inside tanks or on-site. These require special safety procedures.

(2) Normal safety practices will be followed with special consideration to the fact that welding guns exceed the flash point of most solvents.

(3) Prior to welding, the Fabricator will establish a safety procedure and include it in the Fabricator's Procedures Manual (see para. M12G-540).

M12D-422 Hot Plate Fusion Welds

(a) In hot plate fusion welding, no filler rod is used. A heated plate is used to apply heat, and a machine is used to control pressure and alignment.

(b) Prior to welding, the welding machine will be inspected and the following verified:

(1) proper plate temperature according to thermoplastic manufacturer's recommendations

(2) proper heat-up pressure and time

(3) proper transfer rate

(4) proper weld pressure and time

(c) Prior to welding, verify that the two pieces to be welded have been properly aligned and that the weld faces are shaped properly.

(d) After welding, accelerated cooling will not be used.

ASMENORMDOC.COM : Click to view the full PDF of ASME RTP-1 2019

Figure M12D-2 Visual Features of Hot Gas Welds

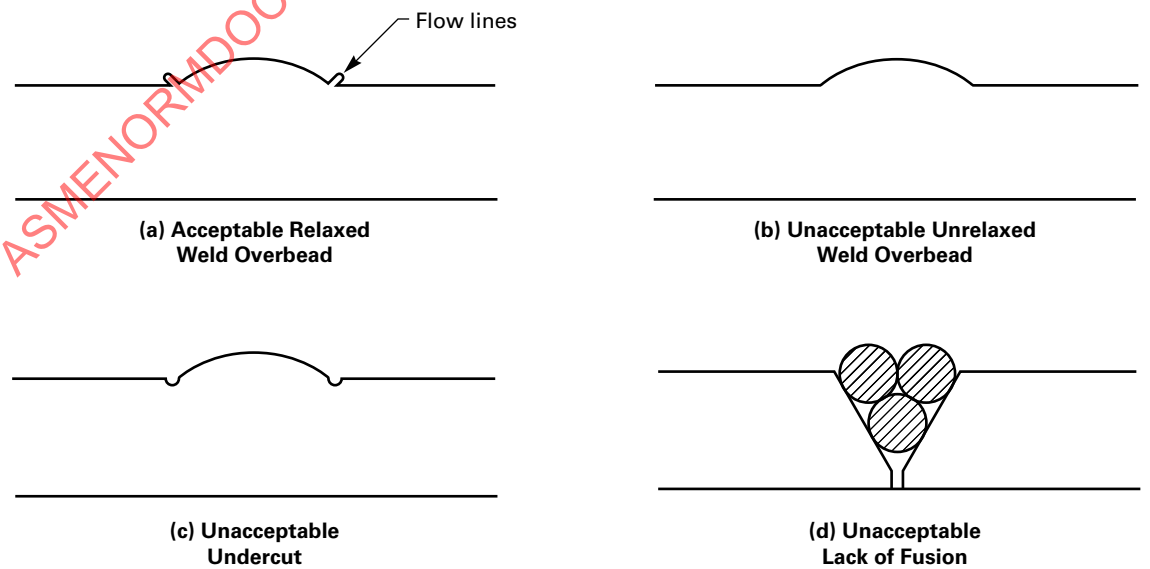

Figure M12D-3 Illustrations of Flow Lines

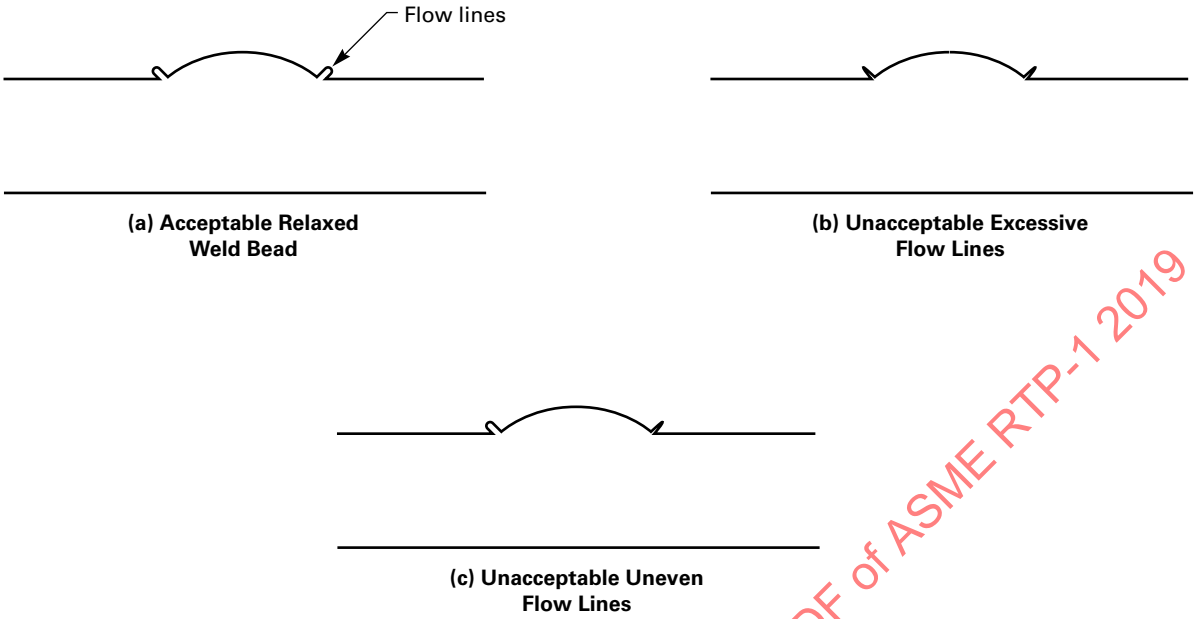

Figure M12D-4 Heat-Affected Zone Patterns

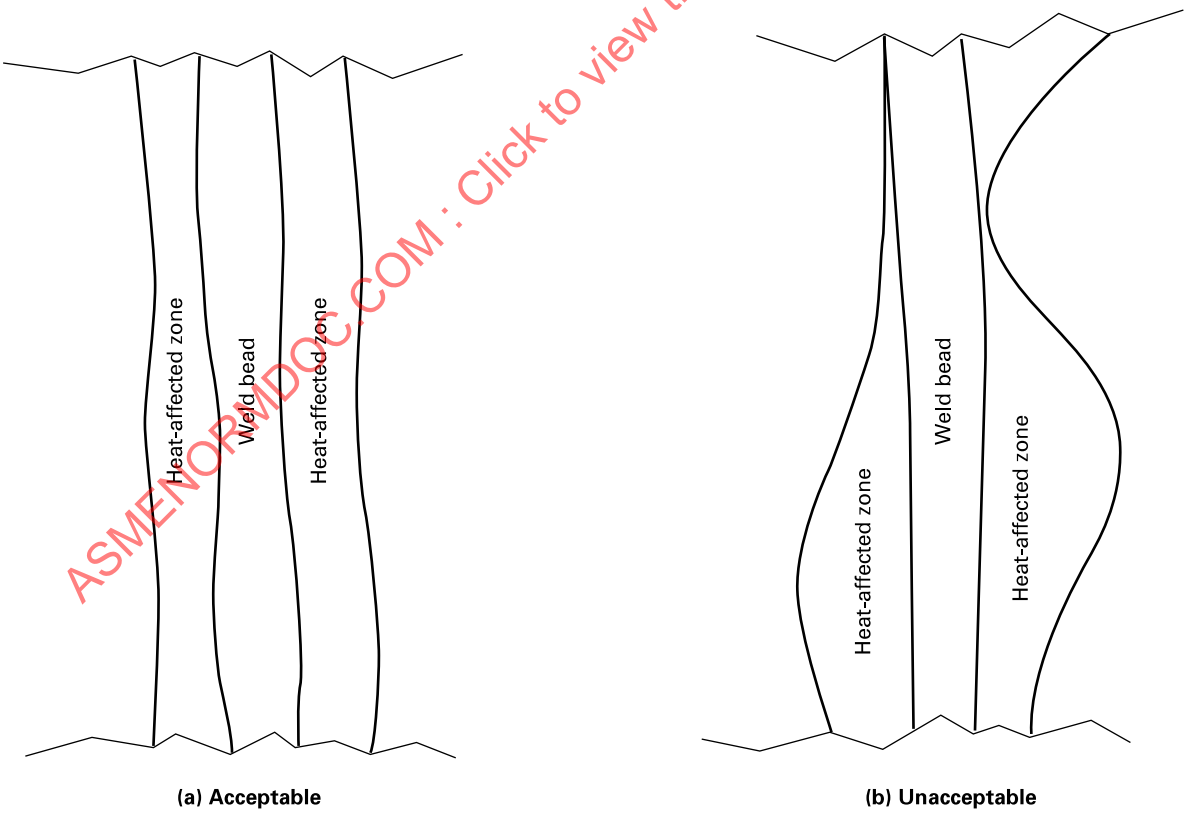

ASMENORMDOC.COM : Click to view the full PDF of ASME RTP-1 2019

Figure M12D-5 Butt Fusion Welds Showing Melt Flow Lines

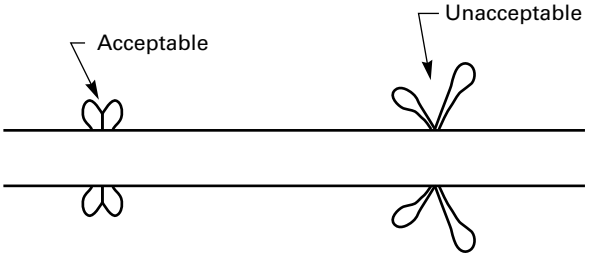

(e) Weld bead visual inspection will meet the requirements of Table M12D-1 as well as the following requirements:

(1) no porosity or air bubbles present

(2) bead "roll over" is not excessive (see Figure M12D-5)

M12D-423 Flow Fusion Welding. Flow fusion involves clamping each material to be joined in a special machine and then using heat to cause them to fuse together under the pressure caused by expansion of the material. Specialized custom equipment is used for this type of welding. The fabricator's equipment, procedure, and the past testing of welds will be reviewed to ensure viability of the process used. Welds will be visually inspected using the applicable criteria from Table M12D-1.

M12D-424 Cap Strip Welding

(a) Cap strip welding is similar to hot gas welding, except that a flat strip of the same thermoplasticmaterial is applied over an existing weld. The flat strip may have fiber backing impressed on the face to be bonded to the RTP overlay. The cap strip with a fiber backing provides continuity of bond between the thermoplastic lining and the RTP structural overlay.

(b) Inspections will show that the requirements of Table M12D-1 as well as the following are met:

(1) *Preparation.* For fabric-backed sheet, when a cap strip is applied over welds, the fabric must be removed from the sheet in the weld area at least as wide as the cap strip.

(2) Excess overbead must be removed to offer a near-flat surface for the cap strip. Care will be taken to avoid cutting into the base sheet material and to avoid excessive surface scratches.

(3) After producing a flat surface, the prepared area must be fully inspected and spark tested prior to application of the cap strip.

(4) *Warpage*. The cap strip weld must be flat and relaxed, indicating consistent fusion and the lack of bridging or air voids under the strip. See Table M12D-1.

M12D-500 TESTS FOR DEFECTS IN WELDS

M12D-510 High Voltage Spark Test (19)

All welds with adequate access will be tested with a high voltage spark tester to find flaws or imperfections in the weld. Welds will be tested before application of the RTP overlay and after application of the RTP overlay but before shipment. Other plastic areas may also be tested, as long as properly functioning targets are present behind the area. The Fabricator will have written test procedures including calibration procedures. When the finished weld has a cap strip, root welds are to be spark tested after flattening the root weld bead and before the cap strip is applied [see para. M12D-424(b)]. Spark testing after welding on a cap strip may be accomplished if desired for added security.

(a) *Voltage*. To ensure proper voltage levels during inspection of a thermoplastic weld using a spark test apparatus, three components should be considered: the level of AC voltage, frequency of the spark tester, and travel rate of the spark tester along the weld. Each of these three components, independently and together, will impact the overall results of a spark test, as well as the amount of voltage received by the sheet lining. The recommended rate of travel for spark testing is 1 ft/sec (300 mm/sec) minimum, and do not hold a probe in a stationary position. The recommended starting voltage should be set to 5 kV for each millimeter of material thickness. The reduction of the voltage by 10% with each subsequent pass is optional; it shall be agreed upon between the User or User's Agent and Fabricator. Defects and repairs shall be recorded on the project weld map. Final spark test parameters shall be agreed upon between the User or User's Agent and Fabricator, recognizing that each polymer type and sheet lining thickness might require a unique set of spark test parameters.

(b) *Grounding*. Grounding strips will be applied on a permanent or temporary basis on all weld areas and any other area to be spark tested. The ground material will have consistent conductivity and permanent grounds will not inhibit bond strength. Acceptable permanent ground materials are thoroughly mixed carbon or graphite/resin putty (33% to 40% by weight carbon or graphite), carbon veil, carbon fiber tape, or conductive polyester fiber. The conductivity and continuity of the ground material will be tested before application of the RTP laminate by using the test procedure outlined in para. M12B-644.2.

(c) *Procedure*. The recommended spark testing procedure will be as outlined in ASTM D5162 Test Method B. The vessel will be thoroughly cleaned and dried. The tester will be in continuous motion, as dwelling in one place could rapidly cause penetration and failure. A speed of about 1 ft/sec (300 mm/sec) is recommended. Periodically (at least every 5 min) touch the tip to the conductive substrate to ensure proper operation and good electrical

ASMENORMDOC.COM : Click to view the full PDF of ASME RTP-1 2019

continuity. Proper functioning after application of the RTP overlay will be confirmed by sparking to any efficient ground.

(d) *Safety*. Static electricity can build up in the ground material during high voltage spark testing, and can cause arcing and personal injury. Good practice is to wire the ground material to a good in-the-ground ground to prevent accumulation of high static voltages.

M12D-520 Gas Penetrant Tests

For welds where accessibility prevents a high voltage spark test, a helium or halide leak test is required. This test must be done before the RTP overlay is applied. Care will be taken to avoid damage to the liner from overpressure. An advantage of this test is that all defects that penetrate through the sheet, including welds, can be found.

M12D-600 FLANGES, NOZZLES, AND MANWAYS

M12D-610 Fabrication Options

Linings for nozzle necks and manway rounds may be fabricated from pipe or from sheet stock wrapped and welded to form the required tube shape. Linings for flange faces may be cut from sheet stock and welded to the neck, flued from sheet stock, or flared from tubing using thermoforming tools. The shell lining can be flued to join the neck lining or the tubing may be flared to join the shell at a short distance from the nozzle. This section will present some of these designs, with rules and recommendations.

M12D-620 Shell-Neck and Neck-Flange Designs

(a) Figures M12D-6 and M12D-7 show acceptable constructions for nozzle and manway linings. The thickness of the lining for the necks and flange faces must be at least as thick as the lining of the shell. The thickness of the lining for nozzle necks will not be more than two times the nominal thickness of the sheet used for construction of the vessel shell. Welding on both sides of all T joints is preferred because of the increased strength and balanced residual weld stresses. In case access to both sides of a T joint is not possible, welding from one side of the T joint is acceptable as long as full penetration is achieved. Nozzle and manway constructions other than those shown in Figures M12D-6 and M12D-7 will be agreed to by the User before fabrication starts.

(b) Figure M12D-8 shows typical designs for bottom nozzles.

(c) All welds will be high voltage spark tested. The only exception will be where access to the inside of the weld with the spark tester is impossible. This testing requires appropriate conductive targets to be installed behind welds. In cases where there is access to the inside of the vessel, spark testing can be accomplished after installing the target and before the remainder of the RTP overlay is applied.

(d) The RTP structural overlay may be applied to the nozzle/manway neck and flange before attachment to the shell or end closure. Alternatively, if the lining can be supported suitably, the RTP structural overlay may be applied after weld attachment of these appurtenances.

M12D-700 INTERNAL ATTACHMENTS

(a) Internal attachments include baffles, dip pipes, spargers, and others. Since these are ordinarily supported by attachment to the thermoplastic lining, special care in design and fabrication is necessary to ensure that lining forces and lining-to-RTP bond forces are low enough to avoid failure (see para. M12C-400).

(b) In case an attachment must be installed over a shell weld or an end closure weld, the weld overbead will be mechanically removed before installing the attachment. A preferred alternative approach for baffles and some other attachments is to cut out the attachment locally to accommodate the weld overbead.

(c) Reinforcement pads are required for all attachments to the liner. A small drain hole may be provided on the bottom of each pad. For applications involving sanitary conditions, such as food or pure water, this drain hole will not be installed.

M12D-800 REPAIR PROCEDURES

M12D-810 Scope

This section sets forth general criteria and repair procedures that are to be used to correct nonconformities in liners in dual laminate vessels before they may be accepted as complying with this Standard. Where repair involves removal and replacement of any of the RTP structural laminate, the procedures of Mandatory Appendix M-7 will also apply.

M12D-820 General Conditions

In general, when the nonconformities in the defective or damaged liner, bond, or related RTP laminate are repaired, the repair will ensure that the final area will have the same physical strength and chemical resistance as the specified original laminate. All defects and completed repairs must be recorded in writing in a repair log, which will become part of the quality assurance documents for that vessel. Other general conditions outlined in Mandatory Appendix M-7 appropriate to dual laminate repairs also apply.

M12D-830 Nonconformities

Vessels fabricated to this Standard may be repaired to correct nonconformities prior to certification and stamping, provided that all the following conditions are met:

ASMENORMDOC.COM : Click to view the full PDF of ASME RTP-1 2019

(19) **Figure M12D-6 Nozzle Construction for Penetrating Nozzle**

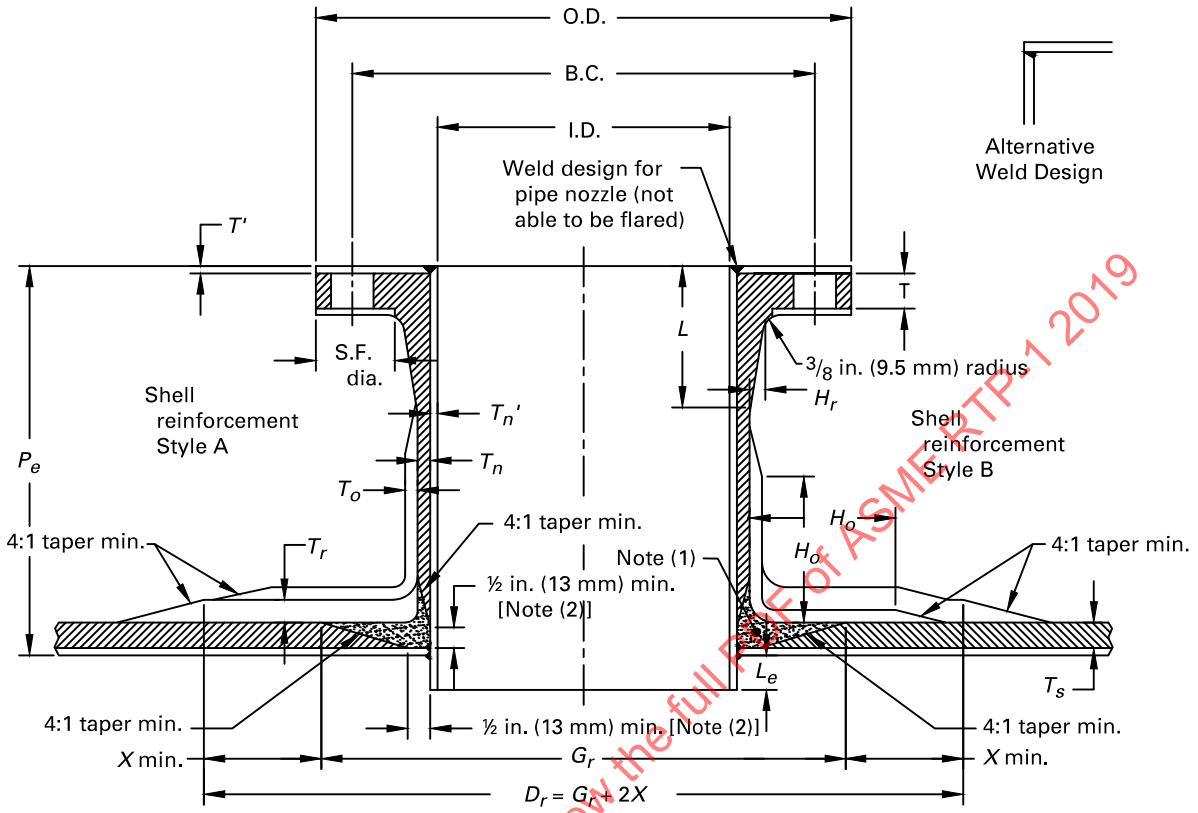

Legend:
Gr = outside perimeter of grind block
X = greater of 3 in. (75 mm) or I.D./2

NOTES:
(1) Fill with laminate per para. 2-200.
(2) Where fabric-backed lining is used, follow requirements of para. M12D-420(c).

(a) The general requirements of para. M7-210 as they apply to repair of dual laminates are met.

(b) The thermoplastic manufacturer's procedures and limitations on rewelding are followed.

(c) The nonconformities must be classified as repairable as indicated in para. M12D-840.

(d) The Fabricator will provide detailed written procedures for each kind of repair that will be made.

(e) The total amount of area repaired by patching or replacing lining after the RTP has been applied will not exceed 2% of the total inside liner area or 3 ft^2 (0.3 m^2), whichever is greater.

(f) The total length of weld joints that are repaired after the RTP overlay is applied will not exceed 2% of the total length of welds in the thermoplastic liner. All welds can be replaced prior to application of the RTP overlay.

(g) Weld repairs are accomplished by a qualified Welder qualified on the same material as the liner and in accordance with the Fabricator's qualification procedures and with this Standard.

M12D-840 Repairable Nonconformities

Repairable nonconformities are

(a) all weld defects in Table M12D-1.

(b) debonded areas.

(c) blisters.

(d) incorrect location of nozzles only when the correct nozzle is relocated far enough away so that reinforcing pads do not overlap.

(e) liner surface nonconformities contained in Table M12B-4. Scratches may be polished or scraped out, except that the thickness of the sheet will not become too thin (see Table M12B-4).

(f) stress relief not accomplished when required.

ASMENORMDOC.COM : Click to view the full PDF of ASME RTP-1 2019

(19) **Figure M12D-7 Nozzle and Manway Construction and Installation**

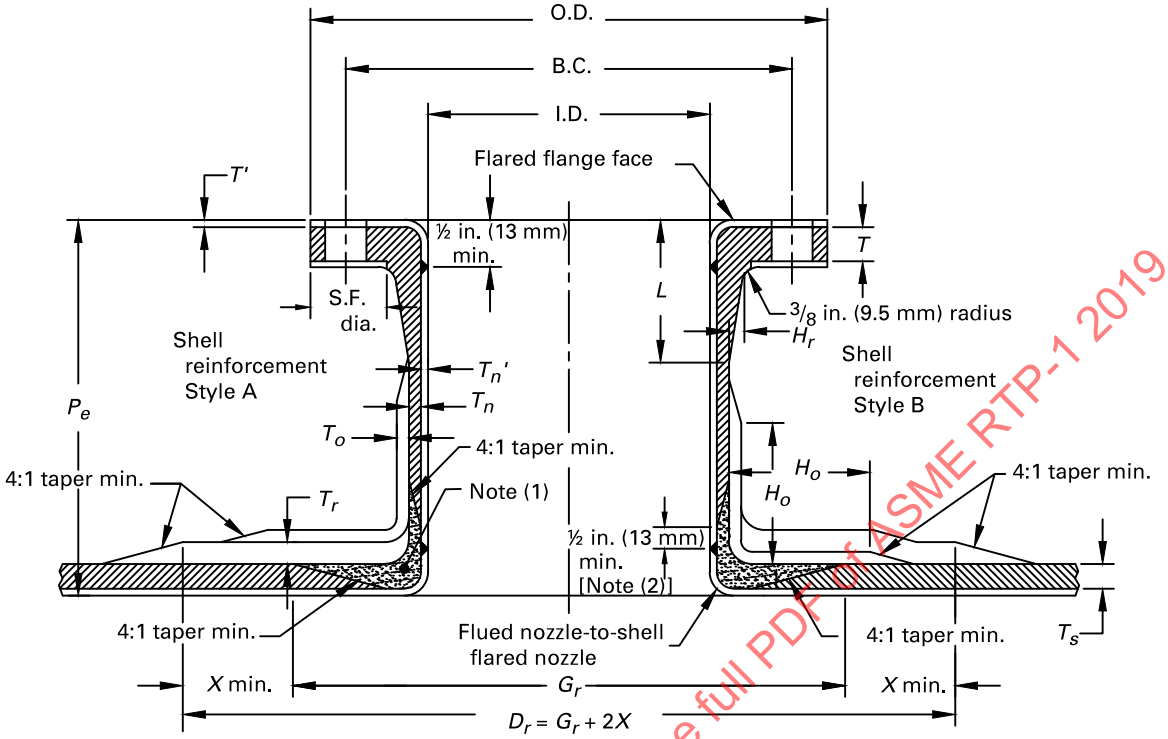

(a) Shell Lining Flued

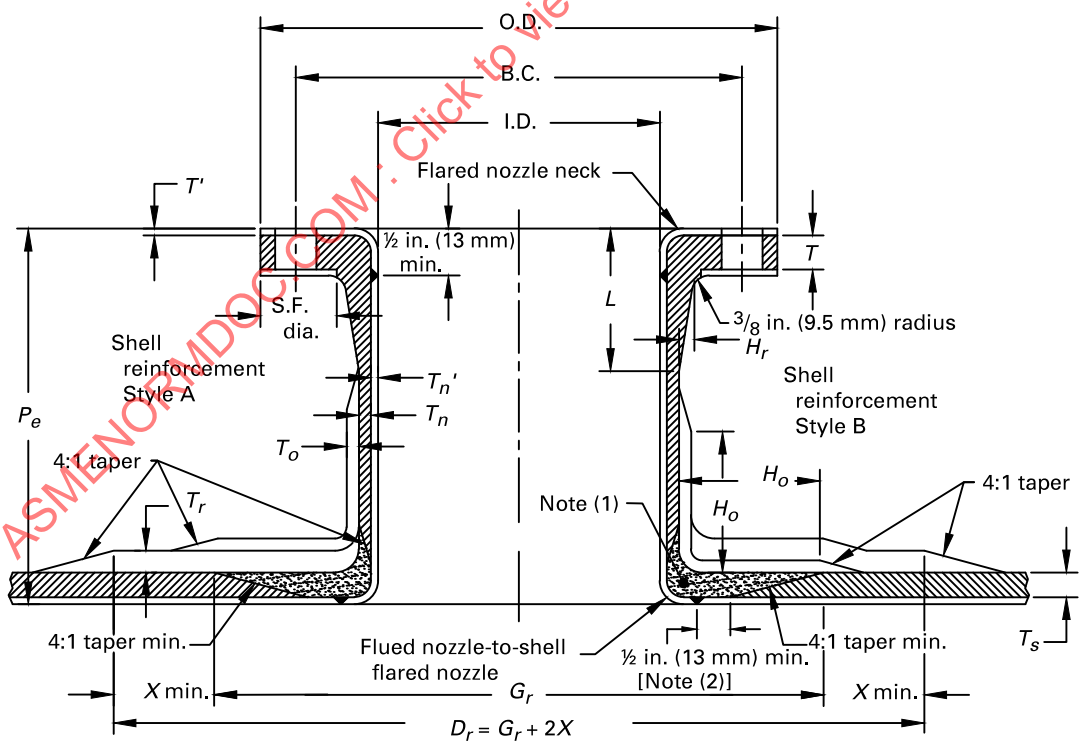

(b) Nozzle Neck Flared

Legend:
Gr = outside perimeter of grind block

ASMENORMDOC.COM : Click to view the full PDF of ASME RTP-1 2019

Figure M12D-7 Nozzle and Manway Construction and Installation (Cont'd)

(Cont'd)

X = greater of 3 in. (75 mm) or I.D./2

NOTES:

(1) Fill with laminate per para. 2-200.

(2) Where fabric-backed lining is used, follow requirements of para. M12D-420(c).

(g) weld defects detected in the final inspection by high voltage spark test when the vessel has less than 1% of total weld length plus 12 in. (300 mm)

M12D-850 Irreparable Nonconformities

The following nonconformities will not be considered repairable. A vessel that has any one of these nonconformities will not be certified as being fabricated in accordance with this Standard.

(a) Incorrect material: sheet, filler rod, strip, etc.

(b) Weld defects detected during final inspection by high voltage spark test that exceed the following:

(1) 2% of total weld length plus 12 in. (300 mm) prior to hydrotest

(2) 1% of total weld length plus 12 in. (300 mm) after hydrotest (rehydrotest not required)

(c) Liner is thinner than lower tolerance on thickness.

(d) Thermoformed components are less than specified thickness.

(e) Ground strip for spark test target omitted or insufficiently conductive.

M12D-900 APPLICATION OF THE RTP OVERLAY

M12D-910 Application of Spark Test Targets

Prior to application of the RTP overlay, all of the conductive spark test targets must be applied. As a minimum, all welds will have a conductive target on the exterior surface of the liner prior to application of the RTP overlay (see para. M12D-500).

(19) **M12D-920 Testing Bond Strength Between Liner and RTP Overlay**

The Fabricator will ensure adequate bond strength by performing the tests required in para. M12B-614.4. In addition, for dual laminate vessels with PVC or CPVC liners, these tests shall be performed on each bonding resin batch and on each lot of liner material used. The bond strength test results shall be documented and shall meet the minimum requirements of para. M12B-614.4.

M12D-1000 INSPECTION

In addition to the requirements of Article E, the Inspector will visually check the interior and exterior surfaces of the lining before the RTP overlay is applied and the exterior surface of the RTP overlay after it is applied. All the visual requirements of Tables M12D-1 and M12E-1 will be met. In particular, this inspection will ensure that cap strips and conductive targets are installed properly (see para. M12E-220).

ARTICLE E
INSPECTION AND TEST

M12E-100 SCOPE

This Article covers inspections and tests required on a dual laminate vessel. It is intended to ensure that the completed vessel has been designed and fabricated in accordance with the requirements of the latest revisions of the design, of the approved drawings, of the UBRS, and of this Standard.

This Article is in addition to the inspection and testing of the RTP structural laminate of dual laminate vessels which is provided in Part 6 of this Standard. However, some inspections and tests of the lining, the bond, and the RTP laminate should or may be accomplished at the same time.

When the corrosion barrier of the RTP laminate is replaced by a thermoplastic lining, the testing for quality of the lining as provided in this Article will replace those requirements for the corrosion barrier in Part 6.

M12E-200 FINAL INSPECTION

(a) In addition to the documents the Fabricator is required to provide the Inspector in accordance with para. 6-900(a), the following documents related to dual laminate inspection will be provided:

(1) Welder qualification records for individual Welders who made welds in the vessel

(2) current weld map and sheet placement

(3) high voltage spark test records

(4) material logs for all materials used

(b) Paragraphs M12E-210 and M12E-220 describe the minimum basic tests relating to the thermoplastic lining that must be made, witnessed, or reviewed by the Inspector prior to or at the time of the final inspection.

M12E-210 High Voltage Spark Test

The Inspector will witness the last high voltage spark test performed. This last test will normally be after the hydrotest. Any spark test indication of a defect will be

ASMENORMDOC.COM : Click to view the full PDF of ASME RTP-1 2019

(19)

Figure M12D-8 Bottom Nozzle Construction and Installation

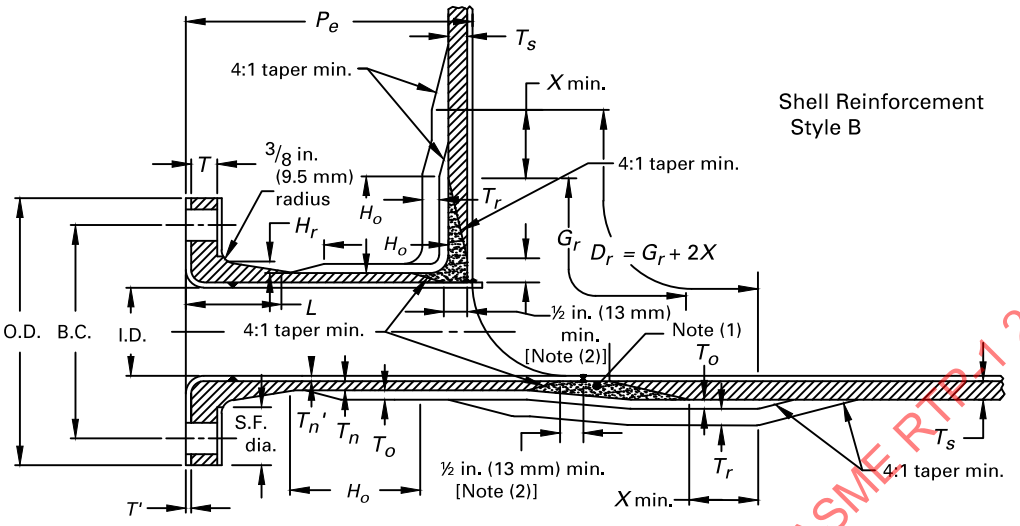

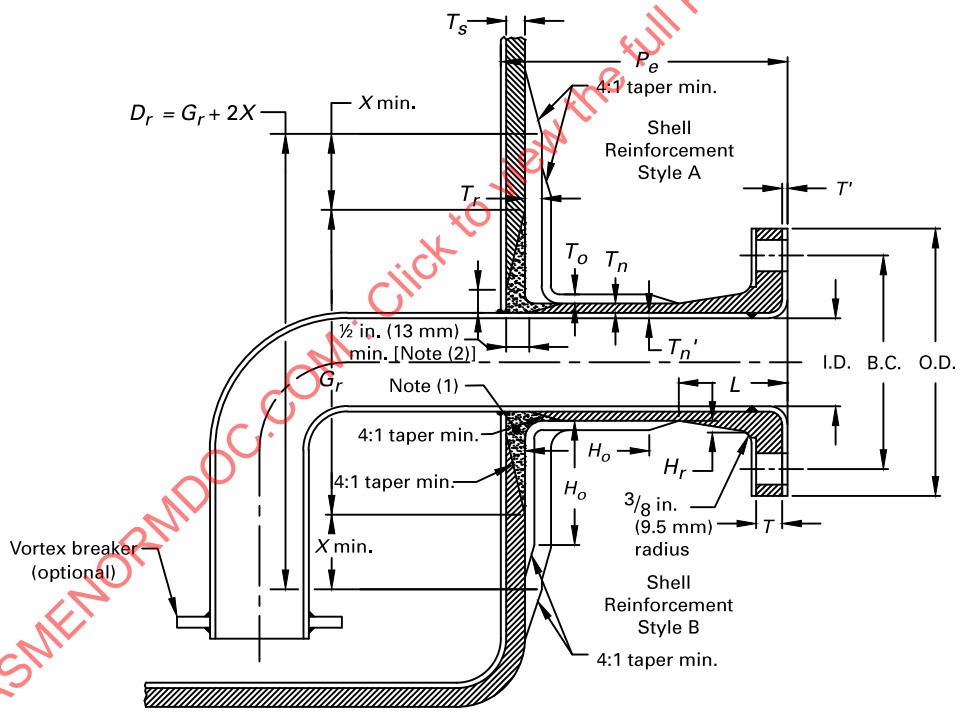

Legend:
Gr = outside perimeter of grind block
X = greater of 3 in. (75 mm) or I.D./2

GENERAL NOTE: Special consideration is to be made to address the cantilever, pump, and vortex forces.

NOTES:
(1) Fill with laminate per para. 2-200.
(2) Where fabric-backed lining is used, follow requirements of para. M12D-420(c).

ASMENORMDOC.COM : Click to view the full PDF of ASME RTP-1 2019

Table M12E-1 Lining Visual Inspection Acceptance Criteria

Imperfection	Definition of Imperfection	Allowed	Comments
Omission of cap strip	Omission when required	Not acceptable	Repairable only before application of RTP structure
Cracks	Linear ruptures of the lining	None	See Note (1)
Debonding	Lack of bond between lining and RTP structure	None	See Note (1)
Foreign inclusions	Particles in the lining that are not of the plastic composition	None	See Note (1)
Dents, pits, grooves	Surface irregularities in the lining	Maximum depth 10% of sheet thickness, maximum size $\frac{1}{8}$ in. (3 mm) diameter or 1 in. (25 mm) long	See Note (1)
Blisters (internal)	Pores within plastic sheet	None	See Note (1)

NOTE: (1) These imperfections may be repaired if approved by the Inspector and the Fabricator's Quality Assurance Manager, and written procedures are received and approved.

cause for rejection until the defect is repaired and retested with satisfactory results.

M12E-220 Lining Imperfections: Visual Inspection

(a) During fabrication, the Fabricator will make all checks necessary to ensure that the lining and the lining–RTP bond meet the requirements of this Standard, particularly the requirements of Tables M12B-4, M12D-1, and M12E-1. The Fabricator's Quality Control Program will include procedures and forms to be used to control the ongoing process of lining fabrication and lining–RTP bond fabrication so as to ensure that imperfections are within required tolerances prior to final inspection.

(b) The Inspector will visually check interior surfaces of the lining and the exterior surface of the RTP overlay. The Inspector will ensure that all visual requirements of Tables M12B-4 and M12E-1 are met.

(c) The final visual inspection will be made after the last high voltage spark test, the hydrotest, and the acoustic emission (if used) tests are completed.

(d) As provided in para. 6-940(e), the Inspector will record the results of the visual inspection in the inspection report.

ARTICLE F
SHIPPING AND HANDLING

M12F-100 SCOPE

This Article covers special requirements for shipping and handling dual laminate vessels at low temperatures.

M12F-200 PRECAUTIONS TO PREVENT MECHANICAL DAMAGE

(a) Since many of the thermoplastics used for liners are brittle and become more sensitive to mechanical shock as temperatures decrease, precautions must be taken in handling and storing to ensure that impact or high stresses are avoided. In particular, polypropylene, PVC, CPVC, and PVDF homopolymer should be shipped and stored above 32°F (0°C). Special precautions to avoid mechanical shock are required, especially if ambient temperatures are below these limits.

(b) Thermal stresses due to sudden changes in temperature will be avoided, as these can cause cracking of the thermoplastic liner. An example is moving a vessel from a heated area to the outside in cold weather.

M12F-300 INSPECTION AFTER SHIPMENT AND INSTALLATION

When a vessel arrives at the User's facility and before unloading from the transport vehicle, a visual inspection (internal and external) is recommended to detect any damage that may have occurred during shipping. After installation of a vessel at the User's facility, a high voltage spark test is recommended to detect any defects in the liner that may have occurred during shipping, handling, and installation.

ARTICLE G
SHOP QUALIFICATION

M12G-100 SCOPE

This Article covers requirements a Fabricator will meet in order to qualify capability for fabricating dual laminate vessels in accordance with this Standard. These requirements are in addition to those set forth in Part 7.

ASMENORMDOC.COM : Click to view the full PDF of ASME RTP-1 2019

M12G-200 GENERAL

In addition to the requirements of para. 7-210 for the shop survey, the ASME survey team will verify that the requirements of this Article are met.

M12G-300 FABRICATOR'S FACILITIES AND EQUIPMENT

In addition to the facilities specified in para. 7-300, the following facilities and equipment will be available for qualification during the shop survey:

(a) areas designated for storage of plastic sheet, weld rod, and other plastic shapes

(b) areas designated for storage of semifinished components of dual laminate vessels

(c) separate shop fabrication areas for assembling thermoplastic liners with special provisions for controlling dust, proper ventilation, cleanliness, and temperature

(d) equipment for thermoplastic welding including appropriate gas supply [see paras. M12D-421(g) and (h)]

(e) temperature-measuring instruments capable of measuring welding and thermoforming temperatures with accuracy of ±3.5°F (±2.0°C)

(f) equipment for thermoforming plastic sections of vessels including flaring and fluing for nozzle attachment [see para. 7-300(b)]

(g) laboratory equipment for evaluation of welds in accordance with para. M12H-400, except that tensile test services may be obtained from a qualified outside laboratory

(h) inspection equipment for determining the quality of welds, including high voltage spark tester

(i) equipment (internal or at an external facility) for determining the bond strength between the thermoplastic liner and the RTP overlay (see para. M12B-614.4)

M12G-400 PERSONNEL

The Fabricator's organization shall include specific personnel designated and qualified for the following functions:

(a) welding thermoplastic parts, and training and evaluating Welders (see Article H).

(b) designing thermoplastic lined vessels, including knowledge of the technology of welding thermoplastics. As authorized in para. 7-400, for RTP vessels this function may be performed by outside qualified engineering design personnel.

M12G-500 DEMONSTRATION OF CAPABILITY

M12G-510 Welding Capability

Each Fabricator's shop shall demonstrate the ability to fabricate thermoplastic liners, including welding, to required quality levels. A Welder qualification record (see para. M12H-100) shall be maintained showing Welder capability to weld thermoplastic parts. The records shall clearly show qualification records for all the following:

(a) type of welding; i.e., hot gas butt welding, nozzle-to-shell welding, cap strip welding, etc.

(b) specific thermoplastic material

(c) specific Welder's name

(d) certification for each separate combination of (a), (b), and (c)

M12G-520 Bonding Capability

Each Fabricator's shop shall demonstrate capability to bond the RTP overlay to thermoplastic liners with sufficient strength to satisfy the requirements of para. M12B-614.4. The shop survey team shall verify bond strength test records and shall determine that the Fabricator has the equipment and trained personnel to determine bond strength.

M12G-530 Demonstration Vessel

(a) The Fabricator shall produce a demonstration vessel, which shall be inspected by the ASME shop survey team. For the purposes of this qualification demonstration vessel, the lining system shall be divided into the following lining classes:

Lining Classification	Demonstration Vessel Top Half	Demonstration Vessel Bottom Half
A [Note (1)]	Fabric bonded lining	Chemically bonded lining
B [Note (2)]	Fabric bonded lining	Fabric bonded lining
C [Note (3)]	Chemically bonded lining	Chemically bonded lining

NOTES:
(1) Fabric and chemically bonded thermoplastic linings.
(2) Fabric bonded thermoplastic linings only.
(3) Chemically bonded thermoplastic linings only.

A Fabricator selects the appropriate lining classification and builds a demonstration vessel accordingly. The Fabricator is restricted to fabricating vessels to this Standard in only that class of lined vessels for which he/she has built a demonstration vessel that has passed the qualification procedure.

(b) The demonstration vessel shall be fabricated according to Figure M12G-1 and Table M12G-1.

(c) A Fabricator who is not certified to fabricate solid RTP vessels may qualify for a restricted certificate for dual laminate vessels only.

M12G-531 Demonstration Vessel Quality Requirements

(a) The demonstration vessel shall be inspected by the ASME shop survey team and shall meet the following requirements:

(1) The vessel shall meet all visual inspection requirements of this Mandatory Appendix.

ASMENORMDOC.COM: Click to view the full PDF of ASME RTP-1 2019

(19) **Figure M12G-1 Dual Laminate Demonstration Vessel**

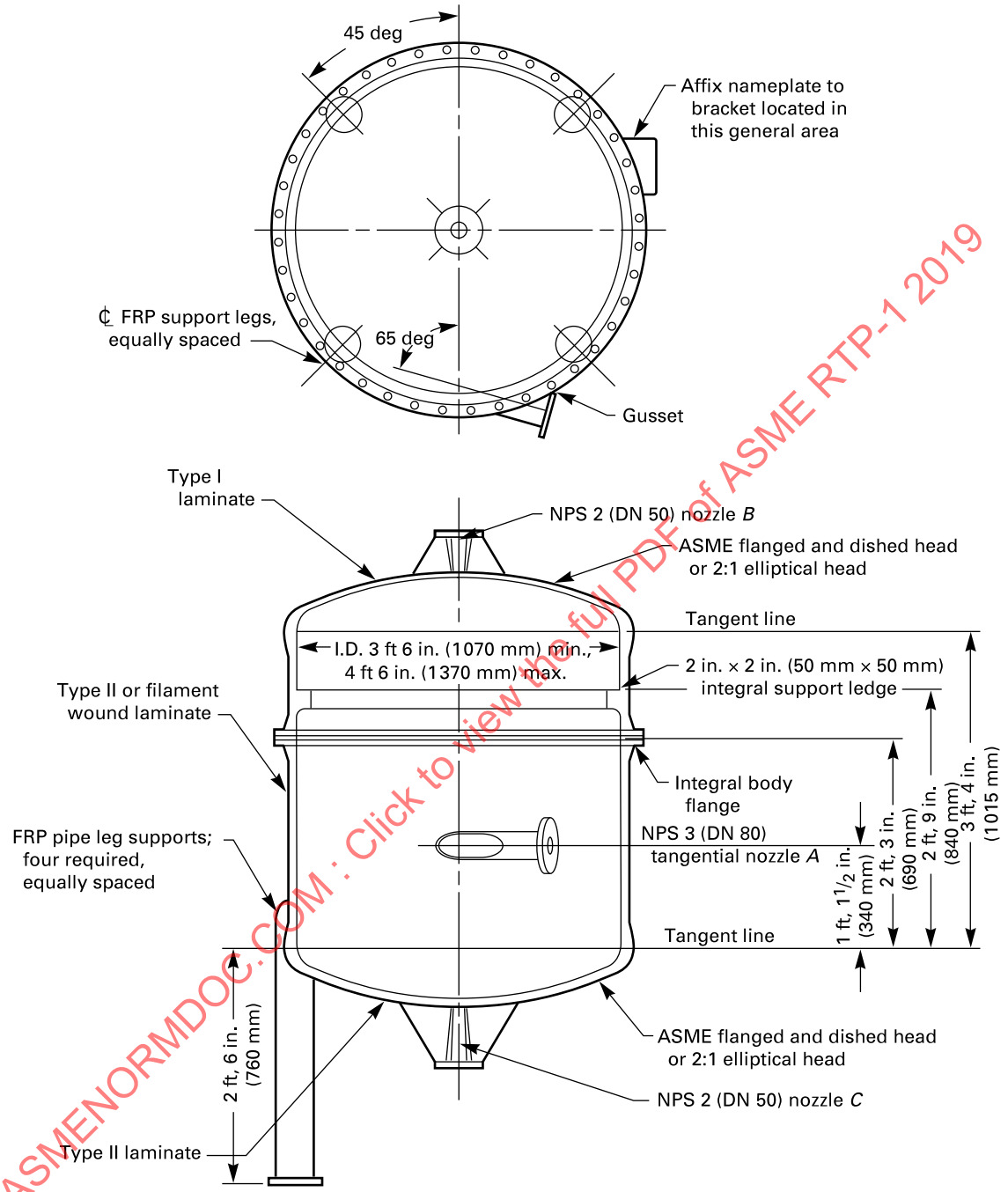

ASMENORMDOC.COM : Click to view the full PDF of ASME RTP-1 2019

GENERAL NOTES:

(a) Laminate thicknesses are to be based on design pressure and temperature, and laminates are to be of the type specified here (see UBRS).

(b) Each head shall have a weld seam with a length exceeding the tank radius.

Table M12G-1 User's Basic Requirements Specification (UBRS) (As Required by the Provisions of ASME RTP-1)

Page 1 of 4

RTP Edition No._____

UBRS Revision No._____

User firm name Not applicable

User's Agent firm name Not applicable

Title of equipment ASME RTP-1 dual laminate demonstration vessel

User's designation no. ASME RTP-1 $\alpha 1$

Installation location (name and address) Fabricator's shop

UBRS prepared by (User or User's Agent):

Name Mandatory Appendix M-12, ASME RTP-1 Phone no. Not applicable Date _____

Address _____

1. Equipment description (equipment sketch and nozzle schedule shall be attached):

2. Additional Fabricator responsibilities:
   - [x] Special requirements
     - [ ] Acoustic emission testing
     - [x] Inspection or testing requirements not listed in the Standard Special, fully flooded (all air vented), ambient temp. water, proof hydrotest at 44.0 psig to 46.0 psig (303 kPag to 317 kPag) max.
     - [x] Full vacuum after hydrotest is complete
     - [x] Spark test after vacuum test
   - [x] Visual inspection acceptance level (refer to Table 6-1 of ASME RTP-1):
     - [x] Level 1
     - [ ] Level 2

     Quantity limitations for gaseous air bubbles or blisters _____

ASMENORMDOC.COM : Click to view the full PDF of ASME RTP-1 2019

Table M12G-1 User's Basic Requirements Specification (UBRS) (As Required by the Provisions of ASME RTP-1) (Cont'd)

Page 2 of 4
RTP Edition No._____
UBRS Revision No._____

[ ] Additional inspection aids/methods [refer to para. 6-940(c) of ASME RTP-1] _____

3. Material selection
   3.1 Material selection by:
   [ ] Resin manufacturer (include data per section 4 of this document)
   [ ] Fabricator (include data per section 4 of this document)
   [ ] End User. Applicable User's specifications/standards, codes, ordinances, FDA requirements, etc. (list and specify; attach copies of local code/ordinance requirements) _____
   [x] Other As required by Mandatory Appendix M-12
   3.2 Material of construction:
   Resin _____ Catalyst/cure system CoNap/MEKP
   Veil _____ Barcol hardness per para. 6-910(b)(4) _____
   [ ] Lift lugs: [ ] RTP [ ] Carbon steel [ ] Other _____
   [ ] Hold-down lugs: [ ] RTP [ ] Carbon steel [ ] Other _____

4. Chemical service data (shall be provided when Fabricator or resin manufacturer is making material selection) _____
   4.1 Description of process function and process sequence: Not applicable
   4.2 Contents:

Chemical Name	Concentration Max. %	Concentration Min. %	Exposure Time
Potable water	100	100	Continuous

   4.3 pH range: _____ max. _____ min.

5. Design
   5.1 Design conditions:

	Operating	Design
Internal pressure	14.0 psig (96.5 kPag)	15.0 psig (103 kPag)
External pressure	0.0 psig (0.0 kPag)	Full vacuum
Temperature	80°F (27°C)	140°F (60°C)
Specific gravity	1.0	1.0
Liquid level	Full	Full

ASMENORMDOC.COM : Click to view the full PDF of ASME RTP-1 2019

Table M12G-1 User's Basic Requirements Specification (UBRS) (As Required by the Provisions of ASME RTP-1) (Cont'd)

Page 3 of 4

RTP Edition No._____

UBRS Revision No._____

Wind/seismic/snow code (include edition or year) __ASCE 7_____

Basic wind speed __0__ MPH (m/s) Classification category _____ Exposure _____

Elevation above grade_____ ft Topographic factors _____

Seismic zone _____1_____ Site-specific seismic information (soil type, ground motion coefficients, etc.) _____

Snow load _____0_____ psf (kPa)

Capacities: Operating _____Flooded_____ gal (L) Flooded _____By Fabricator_____ gal (L)

5.2 Mechanical agitator: [ ] Required [ ] Not required

Dead load _____lb (N)

Static bending moment _____ft-lb (N·m)

Dynamic bending moment _____ft-lb (N·m)

Torque _____ft-lb (N·m)

Horsepower _____hp (W)

Impeller speed _____RPM Impeller diameter _____in. (mm)

Number of impellers_____ Foot bearing: [ ] Yes [ ] No

5.3 Heating and cooling:

[ ] Electric panels

[ ] Steam coil

[ ] Steam sparger

[ ] Heat exchanger

[ ] Other _____

5.4 Mechanical and other forces:

[ ] Violent chemical reaction

[ ] Subsurface introduction of gas or vapor

[ ] Subsurface introduction of steam

[ ] Transmitted mechanical load/force

[ ] Impact due to introduction of solids

[ ] Vacuum from pump down (or vessel draining)

[ ] Vacuum from cool down

[x] Other __Not applicable_____

5.5 Corrosion barrier excluded from structural calculations:

[x] Yes

[ ] No

5.6 Declaration of *critical service* (only by User or User's Agent; refer to para. 1-210 of ASME RTP-1):

[ ] Yes

[x] No

6. Designation of Inspector (Review paras. 1-400, 1-430, and 1-440 of ASME RTP-1. It shall be recognized that ASME RTP-1 establishes numerous duties for the Inspector, which necessitates that the Inspector be present in the fabrication shop throughout a major portion of the fabrication interval.). Inspector shall be:

[x] Fabricator's Quality Control principal

[ ] User's representative

[ ] Other

ASMENORMDOC.COM : Click to view the full PDF of ASME RTP-1 2019

Table M12G-1 User's Basic Requirements Specification (UBRS) (As Required by the Provisions of ASME RTP-1) (Cont'd)

Page 4 of 4

RTP Edition No._____

UBRS Revision No._____

Inspector's name _____ Telephone _____

Company _____

Address _____

_____

6.1 Approval of Inspector designation

6.1.1 Authorized User's representative:

Name _____ Title _____

Signature _____ Date _____

6.1.2 Authorized Fabricator's representative:

Name _____ Title _____

Signature _____ Date _____

Additional requirements: Requires Witness of Hydrotest form (Fig. M6-3).

Approach maximum hydrotest pressure using a manually actuated hydrotest pump, in a number of pressure steps, over a 30-min time period.

Provide a substantial physical barrier between the vessel and all personnel during hydrotest for safety reasons.

ASMENORMDOC.COM : Click to view the full PDF of ASME RTP-1 2019

Figure M12G-2 Post-Test Sectioning of Dual Laminate Demonstration Vessel for Final Inspection and Display

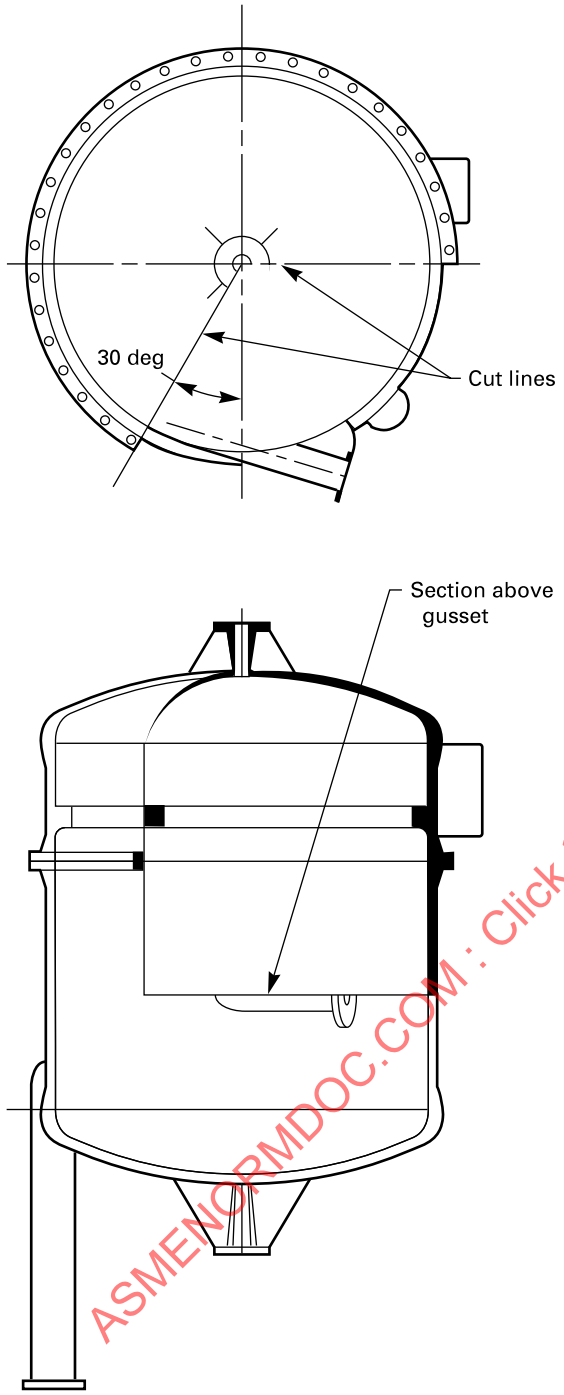

(2) The layout of thermoplastic sheets and the weld map shall conform to the requirements of para. M12C-300.

(3) The vessel shall be tested to full vacuum. No debonding of the lining will be evident.

(4) The vessel shall be high voltage spark tested and will not show any defects.

(5) The demonstration vessel shall be cross-sectioned in accordance with Figure M12G-2 to show the weld quality, the amount of liner thinning in thermoformed knuckles and flares for nozzles, flange construction and quality, bond between the liner and the RTP overlay, and the spark test targets. All of these areas shall meet the requirements of this Appendix.

(b) Failure to meet any of the requirements in (a) above shall cause the Fabricator to fail for qualification to fabricate to ASME standards that class of dual laminate vessel.

(c) The vessel shall be sectioned and placed on permanent display in the same manner as the RTP vessel.

M12G-540 Procedures

The Fabricator shall have the following procedures clearly defined and established:

(a) spark testing
(b) welding
(c) forming
(d) safety
(e) stress relieving

M12G-550 Fabricator Certification

A Fabricator shall be certified to fabricate only dual laminate vessels by constructing one demonstration vessel in accordance with Figure M12G-1. The following conditions shall be met:

(a) The hydrotest required in Mandatory Appendix M-6 is performed before the vacuum test required in M12G-531(a)(3).

(b) The visual requirements of the liner (Table M12E-1) are substituted for the visual requirements of the RTP liner.

(c) The RTP structural overlay of the dual laminate vessel is in complete accordance with requirements of this Standard.

ARTICLE H
QUALIFICATION OF WELDERS

M12H-100 GENERAL REQUIREMENTS

(a) This Article specifies the rules for qualifying personnel to weld thermoplastic parts together. Thermoplastic linings will be assembled only by personnel who have been qualified in accordance with the requirements of this Article.

(b) A *Welder* is an individual who joins thermoplastic parts together using fusion bonding processes.

ASMENORMDOC.COM : Click to view the full PDF of ASME RTP-1 2019

(c) The Fabricator will maintain up-to-date records relating to qualification of each Welder. These records will document the date of last qualification, and will include all calculations and test or inspection reports from internal and independent laboratory testing programs used in the process of qualification. These records are subject to review on request by all parties engaged in the process of procurement or inspection.

M12H-200 RESPONSIBILITY

It is the responsibility of the Fabricator to train and qualify thermoplastic Welders. Safety is also the responsibility of the Fabricator [see para. M12D-421(l)].

M12H-300 QUALIFICATION OF WELDERS

(a) Welders may qualify their capabilities at the time a Fabricator qualifies for shop qualification under Article G.

(b) Welder and welding operator performance qualifications shall be in accordance with AWS B2.4. The quality of polymeric weld joints depends on the qualification of the Welders and welding operators, the suitability of the equipment used, environmental influences, and adherence to the applicable Welding Procedure Specification (WPS). Welders and welding operators shall be trained and possess a valid qualification certificate.

(c) It is the responsibility of the Fabricator's Quality Control Manager to

(1) document the Welding Procedure Specification (WPS) and Performance Qualification Test Record (PQTR) as outlined in AWS B2.4 for the preparation, machining, and testing of welder and welding operator qualification samples

(2) supervise or conduct the visual inspection of welds made for qualification in accordance with AWS G1.10M

(3) verify that weld samples are tested in accordance with AWS B2.4

(4) sign and date the certification process PQTR

(d) Welders shall qualify separately for each thermoplastic material (TPM) and for each weld process per AWS B2.4.

M12H-310 Making Weld Test Samples

M12H-311 Butt Welds

(a) Welds shall be made in accordance with AWS B2.4. In addition to the requirements of AWS B2.4, where applicable, each weld sample shall contain a weld start and a weld stop.

(b) For hot gas welds, a single V-shaped bevel shall be used for all sheet thicknesses under 0.16 in. (4.0 mm) thick and a double V bevel shall be used for all thicknesses 0.16 in. (4.0 mm) and greater. The Welder shall be responsible for the generation of the appropriate bevels. For welding TFE, the weld rod shall be PFA.

M12H-312 Cap Strip Welds. Cap strip welds shall be made over existing welds. Cap strips with or without fiber backing may be used. The crown of the existing weld shall be appropriately skived or ground off before the cap strip weld is applied.

M12H-313 Nozzle Welds. The Welder shall prepare the nozzle and the flat or curved part representing the shell of the vessel. Two nozzles shall be welded, one NPS 2 (DN 50) in diameter and another NPS 4 (DN 100) to NPS 8 (DN200) in diameter. Thicknesses shall represent those thicknesses expected for that material. If pipe is used, the pipe wall thickness will be in the range expected to be used. Evaluation shall be by visual inspection only. The nozzles shall be cut in half to aid in visual inspection.

M12H-400 EVALUATING WELD SAMPLES (19)

(a) Visual inspection of all welds shall be accomplished by an inspector experienced in the material and weld process being evaluated in accordance with AWS G1.10M. Each weld inspector shall be designated in writing by the Fabricator's Quality Control Manager. This document shall contain the period during which the assignment as weld inspector will be valid, as well as any limits on the type or kind of evaluation for each inspector.

(b) The visual weld inspector shall fill out the PQTR for all visual factors listed that are appropriate to the weld process under evaluation per AWS G1.10M.

(c) Each and all individual tensile test or bend test results shall meet the criteria as required in AWS B2.4. Results of the tests shall be recorded on the PQTR. In addition to AWS B2.4 Table 4.3, see Table M12H-1 for additional short term weld factors.

(d) Welds shall be qualified in accordance with AWS B2.4. A WPS and PQTR shall be provided for each polymer and process being used. Environmental condition recommendations shall be included in the WPS.

Table M12H-1 Weld Strength Requirements

	Short Term Minimum Weld Factor	
Thermoplastic Flow	Hot Plate Butt	Flow Fusion
PP	0.9	0.9
PVC	0.9	NA
CPVC	0.8	NA
PVDF	0.9	0.9
ECTFE	0.9	0.9
FEP	0.9	0.9
TFE (PFA filler)	NA	NA
PFA	0.9	0.9

ASMENORMDOC.COM : Click to view the full PDF of ASME RTP-1 2019

M12H-500 REQUALIFICATION

Requalification shall be for each TPM and each weld process. In any case, Welders shall requalify at least every year. If a Welder has not made a weld using that specific material and process in the past 6 months, he/she is required to requalify prior to making welds on linings under this Standard.

M12H-600 WELDING PROCEDURE QUALIFICATION

Welding procedures shall be qualified in accordance with AWS B2.4. A WPS shall be provided for each polymer and process being used. Environmental condition recommendations shall be included in the WPS.

ARTICLE I
GLOSSARY

acoustic emission test: a technique for finding flaws in materials by using transducers to detect the sound energy emitted when flaws grow under an intentionally applied stress.

annealing: heat treatment after processing to remove internal stresses incurred during fabrication processes.

backing: a fibrous component, either woven or nonwoven, embedded into a thermoplastic lining to allow a mechanical bond between the lining and the structural laminate; usually a knit woven product.

backing strip: a thin strip of plastic of the same material as the base plastic sheet fused to the back of fusion welds, often used to replace the fiber to assist bonding that was removed in order to accomplish the weld.

bridging: a weld defect in which the weld bead does not fill the prepared groove between two pieces of thermoplastic to be welded.

butt fusion weld: a weld accomplished by heating the two surfaces to be joined, then forcing the surfaces together to accomplish a fusion weld.

cap strip: a thin strip of plastic of the same material as the base plastic sheet liner that is heat welded over fusion welds. When the cap strip is applied on the backside of a weld, it contains fiber embedding to ensure continuity of bonding where fiber had been intentionally removed to facilitate welding.

climbing drum test: a test to determine the bond strength of a lining on a structural material by using a rolling drum debonding action (ASTM D1781).

CPVC: chlorinated polyvinylchloride.

crown: that part of a hot gas fusion weld that stands above the surfaces of the base plastic sheets.

CTFE: chlorotrifluoroethylene.

dual laminate: a two-ply laminate consisting of a chemically resistant thermoplastic liner bonded to an RTP structural laminate.

ECTFE: ethylene chlorotrifluoroethylene.

environmental stress crack: stress cracking requiring a specific environment or atmosphere in order to cause the crack to occur. See *stress crack*.

etching: a surface effect that results in a roughened surface from chemical reaction.

extrusion weld: a weld formed between two thermoplastic materials by a hot thermoplastic strip extruded into the weld joint at a temperature high enough to form a fusion bond.

face tensile test: a tensile test to determine the bond strength of a lining on a structural material by pulling the bond apart using only tensile forces (ISO 14130).

FEP: fluorinated ethylene propylene.

flaring: a shaping process in which the end of a cylinder is thermoformed (flared) over a pattern to form a flanged end.

flow lines: the melted material that flows out, forming small extrusions on both sides of the weld bead.

fluing: a shaping process in which a flat, or nearly flat, sheet is pierced with a round tool to generate a hole with a neck in the sheet.

ground: a material on the back of a weld (or any other part of a thermoplastic liner) that has sufficient electric conductivity to allow high voltage spark testing to detect flaws in the weld.

ground strip: a ground in the form of a strip placed against or bonded onto the back of weld bead.

HDPE: high density polyethylene.

heat-affected zone (HAZ): the areas adjacent to both sides of the completed weld bead that became heated during welding and became shiny in appearance.

hot air weld: a fusion weld normally made by hand in which the base thermoplastic and filler rod are heated by hot air.

hot gas weld: a fusion weld made by hand in which the base thermoplastic and filler rod are heated by a hot gas.

hot plate weld: see *butt fusion weld*.

lap shear test: a shear test to determine the bond strength between a thermoplastic lining and the RTP structural laminate.

MFA: methylfluoroalkoxy fluoropolymer.

notch: see *undercut*.

orange peel: an irregularity in surface topology that visually resembles an orange peel.

overbead: see *crown*.

ASMENORMDOC.COM : Click to view the full PDF of ASME RTP-1 2019

PE: polyethylene.

peel strength test: a test that peels the lining off of a dual laminate composed of a thermoplastic lining and an FRP structural laminate to determine the bond strength. Three such tests are the climbing drum test (ASTM D1781), the peel test (BS 4994), and the floating roller peel test (ASTM D3167).

PFA: Teflon® PFA or perfluoroalkoxy fluoropolymer.

PP: polypropylene.

PTFE: see *TFE*.

purge material: a different thermoplastic, such as PP, used to clean out remaining weld filler material from a weld tool, such as an extruder, to prevent difficulty in continuing welding after cooling the tool.

PVC: polyvinylchloride.

PVDF: polyvinylidene fluoride.

spark test: a high voltage test for detecting flaws in plastic by emitting a loud crack sound when a spark passes through a flaw in the plastic to the conductive ground or target.

speed welding: a hand fusion weld process where the filler rod is fed to the weld using hand force through a tube to the weld bead; this process is more efficient and rapid than *hand welding,* where the filler rod is held separately in one hand.

stress crack: an external or internal rupture in a plastic caused by tensile stresses less than its short-time mechanical strength.

stress relief: a heat treatment given

(a) to received materials before fabrication to remove residual internal stresses incurred during thermoplastic processing steps or

(b) to welded parts to remove or reduce internal stresses from fabrication steps such as welding or thermoforming

surface contamination: any undesired foreign material adhering to the surfaces of material used in the fabrication of dual laminate products. Examples are lubricants and other processing aids; dirt, oil, and foreign matter from the environment; residual adhesive from protective films; solvent and any other cleaning residues; etc.

target: conductive material behind a weld or behind the liner itself that becomes a ground for high voltage spark testing.

TFE: tetrafluoroethylene; also used to indicate *PTFE,* polytetrafluoroethylene.

thermal cycle test: a test using ten thermal cycles to qualify the bond strength; no debonding indicates satisfactory bond strength. The temperature extremes are usually boiling water and a dry-ice-acetone bath, −108°F (−78°C).

thermoforming: a process for shaping sheet material by deforming at elevated temperature to allow shaping with low forces and less danger of cracking.

undercut: a groove in a weld extending below the surface of the base thermoplastic sheets and usually located at the edge of the weld bead.

virgin material: material (sheet, rod, or strip) that has been manufactured from new, not recycled, plastic and that has not been used earlier in any other service.

weld bead: the material in the weld comprised of plastic from the applied welding rod and melted plastic from the base sheet material.

weld factor: the average tensile strength of welded samples divided by the average tensile strength of the unwelded sheet material. The resulting number is often expressed in percent. *Short term weld factor* is a weld factor from tensile strength tests done in a short time, i.e., minutes. *Long term weld factor* is a weld factor based on tensile creep strength of weld samples compared to unwelded sheet material.

welding: a process for joining by using heat or other form of energy to fuse together two pieces of material.

ASMENORMDOC.COM : Click to view the full PDF of ASME RTP-1 2019

MANDATORY APPENDIX M-13
BALSA WOOD RECEIVING AND INSPECTION PROCEDURES

M13-100 INTRODUCTION

All inspections and tests specified in this Appendix are to be performed by Fabricator personnel or an independent laboratory. This Appendix specifies the minimum inspections and tests that shall be performed on balsa wood that shall be used to fabricate equipment to this Standard.

M13-200 ACCEPTANCE INSPECTION

(a) Acceptance inspection shall include inspection of all boxes for proper packaging and identification, and contamination. This acceptance inspection is to be conducted on unopened boxes. Acceptance requirements and limits are as defined in para. M13-410.

(b) The form in Form M13-1, or a similar form that contains the provisions to record the results of these required inspections, shall be used by the Fabricator.

(c) In addition to performing the above inspections and documentation, the Fabricator shall provide the User or User's agent with a Certificate of Compliance from the material manufacturer. The Certificate shall ensure that materials were manufactured, inspected, and tested per the material supplier's specifications.

M13-300 EQUIPMENT AND MEASURING TOOLS REQUIRED

A moisture meter as described in ASTM D4444 is required. The meter shall be capable of reading a range of 6% to 18% moisture content.

M13-400 PROCEDURES AND ACCEPTANCE LIMITS

M13-410 Balsa Wood Identification and Package Inspection

The balsa wood shall be stored in the packaging as shipped from the balsa wood manufacturer's factory. If repackaging is required, the Fabricator shall ensure that a material Certificate of Compliance traceable to the original material is provided. All other documentation shall remain unchanged. Verify and enter on the inspection record that the balsa wood as identified by the balsa wood manufacturer has the same nomenclature as the balsa wood specified to produce the laminate. Indicate acceptable balsa wood by recording the date and name of the person performing the examination on Form M13-1, column 4.

M13-420 Visual Inspection Criteria

(a) As balsa wood is used during fabrication, it shall be visually inspected for imperfections and contamination. Date and name of the person performing the visual inspection shall be recorded on Form M13-1, column 6.

(b) The balsa wood should be uniform in thickness and show no visible sign of curling due to excessive moisture.

(c) Prior to bedding the balsa wood into the inner laminate layer, the moisture content shall be measured and recorded on Form M13-1, column 5. The moisture content shall also be measured prior to applying the outer laminate layers and recorded on Form M13-1, column 5.

(d) Measurement methods shall be as recommended by the balsa wood core manufacturer or ASTM D4444.

(e) Balsa wood having any of the following defects shall not be used in laminates built to this Standard:

(1) wet spots
(2) contamination
(3) moisture content above 14%

ASMENORMDOC.COM : Click to view the full PDF of ASME RTP-1 2019

(19)

Form M13-1 Balsa Wood Core Inspection Sheet

Fabricator's name _____

Address _____

_____

_____

Balsa wood manufacturer _____

Balsa wood core type _____

Balsa wood core nomenclature _____

QC file no. _____

☐ Receiving inspection

☐ Point of use inspection

1	2	3	4		5		6		7		8
Package No.	Balsa Wood Production Date (if Given)	Lot. No. [Note (1)]	Packaging Inspection		Moisture Content Inspection		Visual Inspection		Laminate Adhesion Check		Comments
			By	Date	By	Date	By	Date	By	Date	
1											
2											
3											
4											
5											
6											
7											
8											
9											
10											
11											
12											
13											
14											
15											
16											
17											
18											
19											
20											

GENERAL NOTE: This form may be reproduced and used without written permission from ASME if used for purposes other than republication.

NOTE: (1) Lot, pallet, product code, or other label identification.

ASMENORMDOC.COM : Click to view the full PDF of ASME RTP-1 2019

NONMANDATORY APPENDIX NM-1 DESIGN EXAMPLES

NM1-100 INTRODUCTION

The RTP-1 Standard provides for design by rules (Subpart 3A) and for design by stress analysis (Subpart 3B). This Appendix presents two example designs, one by Subpart 3B rules, and one by combined Subparts 3A and 3B rules. They are intended to illustrate Part 3 and are correct applications of the Standard but are not the only designs satisfying the requirements. The examples are

(a) a vertical vessel, with a torispherical top head and a toriconical lower head, made of Type I laminate and designed by combined Subparts 3A and 3B rules

(b) a horizontal, saddle-supported vessel, with torispherical heads, made of Type I laminate and designed by Subpart 3B rules

NM1-200 EXAMPLE 1: VERTICAL VESSEL WITH A TORICONICAL LOWER HEAD

The UBRS calls for a vessel 8 ft in diameter, 15 ft from lower to upper knuckle, and with a conical lower head having a semiapex angle of 45 deg. The vessel must contain an internal pressure of 10 psi and be made of Type I laminate. The support ring will be 10 ft above the lower knuckle. The upper part of the sidewall and the top head may be designed according to Subpart 3A rules, but the lower head has a larger semiapex angle than allowed by Subpart 3A. The lower part of the sidewall and the lower head must therefore be designed by stress analysis, using Subpart 3B rules. The Fabricator has qualified Type I laminates for an ultimate tensile strength of 12,000 psi. According to para. 3B-500, the minimum allowable stress ratio is 10; thus, the allowable stress is 1,200 psi.

For analysis, the vessel may be cut 8 ft above the cone-cylinder joint, because the section is out of both the discontinuity zone of the lower head-to-shell joint and the stress intensification near the support ring, and is therefore in a simple membrane stress state. The stress there has no secondary membrane and no bending stress, providing a convenient section to begin the Subpart 3B analysis. It is assumed that the sectioned edge has no axial displacement, but no other constraint, which is consistent with a membrane stress state in a cylinder. The UBRS calls for a 4 in. diameter nozzle at the apex of the cone. The rules of Part 4 may be used to design the nozzle and its attachment, so for purposes of analysis, a free edge is left at the lower end of the head. To minimize stress intensification at the head-shell juncture, a toroidal transition is used. Figure NM1-1 is a sketch of the resulting model. The numbers in small rectangles are meridional distances from the bottom of the head to the points indicated.

As a trial design, Subpart 3A rules were used to find the thickness of the sidewall

$$\begin{aligned} t &= \frac{PD}{2(X/R)} \\ &= \frac{(10)(96)}{(2)(12{,}000/10)} \\ &= 0.40 \text{ in.} \end{aligned}$$

and of the lower head

$$\begin{aligned} t &= \frac{PD}{2(X/R)\cos\theta} \\ &= \frac{(10)(96)}{(2)(12{,}000/10)\cos(45 \text{ deg})} \\ &= 0.57 \text{ in.} \end{aligned}$$

At 0.043 in. per mat ply and 0.01 in. for a veil, the thicknesses are rounded up slightly so that they correspond to an even number of plies. The head laminate is then *V*, 13*M* for a thickness of 0.57 in. , and the sidewall laminate is *V*, 10*M*, or 0.44 in. thick. As an initial try, the joint overlay was set equal to the thickness of the head, and extends full thickness 1.5 in. above and below the toroidal knuckle and then tapers.

The vessel was modeled using a finite difference thin-shell computer program. The program computes the stresses required by paras. 3B-300 and 3B-400 and combines them into the longitudinal and circumferential stresses on the inside and outside of the vessel wall, all along a meridian. Let σ_1 represent the longitudinal normal stress on the inside surface and σ_2 represent the circumferential normal stress. Because the vessel, loading, and support forces are axisymmetric, the shear stresses vanish. Paragraph M3-530 gives the criterion for Type I laminates

$$R = \frac{X}{\left(\sigma_1^2 - \sigma_1\sigma_2 + \sigma_2^2 + 3\sigma_6^2\right)^{1/2}}$$

ASMENORMDOC.COM Click to view the full PDF of ASME RTP-1 2019

Figure NM1-1 Toriconical Head

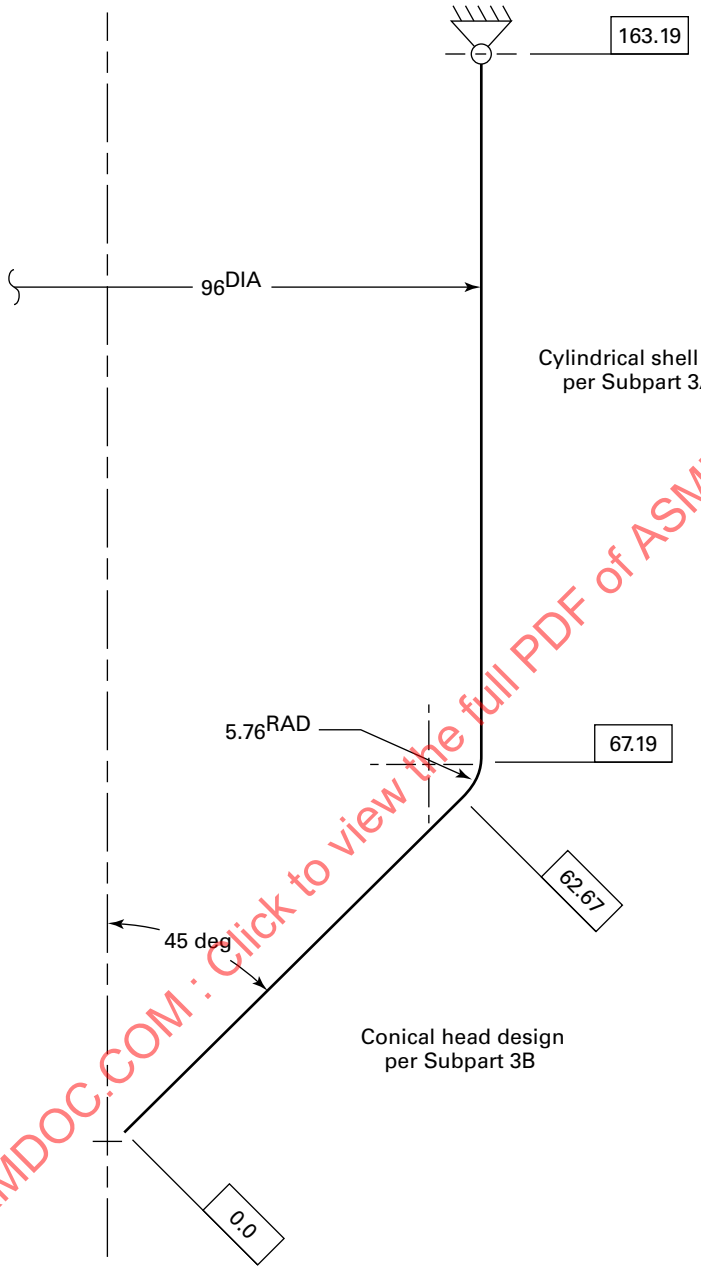

ASMENORMDOC.COM : Click to view the full PDF of ASME RTP-1 2019

In the present case, R = 10, X = 12,000 psi, and σ_6 = 0. Therefore

$$\frac{X}{R} = \left(\sigma_1^2 - \sigma_1\sigma_2 + \sigma_2^2\right)^{1/2} = \frac{12{,}000}{10} = 1{,}200\,\text{psi}$$

This is the criterion for the inside surface of the lower part of the vessel. The criterion for the outer has the same form. The term under the square root, the stress intensity, was plotted as a function of the meridional distance and compared to the allowable stress. The initial design was overstressed in the knuckle. A second design with a joint overlay twice the thickness of the first was tried. Figure NM1-2 is a graph of stress intensity versus meridional distance for the second design. The dashed horizontal line is at 1,200 psi , the allowable stress. The figure shows that all stresses satisfy the criterion and that the design conforms to the Standard. Table NM1-1 lists the thicknesses and laminations of the successful design as a function of meridional distance from the bottom of the vessel.

As the example shows, a vessel that lies outside the rules of Subpart 3A because one vessel part is not included may use Subpart 3A rules for most of the vessel and Subpart 3B for the excluded part.

NM1-300 EXAMPLE 2: HORIZONTAL VESSEL BY SUBPART 3B RULES

The UBRS calls for a horizontal vessel with 10 ft inside diameter, 20 ft between head–shell junctures, and support saddles 2 ft in from the junctures and 18 in. wide. The heads will be torispherical, with the crown radius equal to the vessel diameter, and the knuckle radius equal to 6% of the vessel diameter. The vessel will contain liquid with a specific gravity of 1.1 with a superimposed design pressure of 15 psig. The vessel will be constructed of Type I laminate with ultimate tensile strength of 16,000 psi. The vessel will be examined using acoustic emission according to the requirements of Mandatory Appendix M-8, and thus, the allowable stress ratio, by para. 3B-500, is eight. Figure NM1-3 contains a sketch of the vessel.

Nomenclature used in this example is as follows:

p = total pressure acting at a point on the inside surface of the vessel, positive outward, psi
p_s = pressure exerted by the support saddle, positive outward, psi
p_0 = pressure superimposed above the hydrostatic pressure, psi
R = radius to a point on the surface, in.
R_c = radius of the cylindrical portion of the vessel, in.
R_h = crown radius, in.
R_k = knuckle radius, in.
R_s = stress ratio
S = stress intensity, psi
w = weight of the vessel and its contents, lb
X = ultimate strength, psi
γ = specific weight of the contents, lb/in.^{3}
θ = circumferential angle, measured from the top meridian of the vessel, deg
σ_z = normal stress in the meridional direction, psi
σ_θ = normal stress in the circumferential direction, psi
ϕ = angle between a normal to a point on the head and the vessel axis, deg
τ = shear stress in the plane of the laminate, psi

NM1-310 Loading on the Vessel

The combined hydrostatic and design pressure at a point on the surface of the vessel is given by

$$p = p_0 + \gamma(R_c - R\cos\theta) \tag{1}$$

See Figure NM1-4. The radius to a point on the cylinder is simply R_c and the pressure on the cylindrical vessel parts not under the support saddle is given by

$$p = p_0 + \gamma R_c(1 - \cos\theta) \tag{2}$$

The radius to a point on the crown is

$$R = R_h \sin\phi \tag{3}$$

and to a point on the knuckle is

$$R = R_c - R_k + R_k\sin\phi = R_c - R_k(1 - \sin\phi) \tag{4}$$

Thus, the pressures on the crown and the knuckle are computed from eqs. (5) and (6) below, respectively

$$p = p_0 + \gamma(R_c - R_h\sin\phi\cos\theta) \tag{5}$$

$$p = p_0 + \gamma\left\{R_c - [R_c - R_k(1 - \sin\phi)]\cos\theta\right\} \tag{6}$$

The saddle supports are modeled by replacing them with the pressure they exert against their contact area on the vessel shell. It is assumed that the reaction pressure from the saddle varies as $\cos\theta$ on the lower half of the shell and is zero on the upper half. It is shown in Figure NM1-5 that for equilibrium the variation is

$$p_s = \frac{w}{\pi R_c L}\cos\theta \tag{7a}$$

for 90 deg ≤ θ ≤ 270 deg, and

$$p_s = 0 \tag{7b}$$

for 0 ≤ θ ≤ 90 deg and 270 deg ≤ θ ≤ 360 deg.

Note that eqs. (7a) and (7b) give negative values, since the saddle pressure is inward. Thus, the net pressure on the portion of the shell between 24 in. and 42 in. from the head-shell juncture is the superposition of the hydrostatic, design, and saddle reaction pressures

$$p = p_0 + \gamma R_c(1 - \cos\theta) + \frac{\omega}{\pi R_c L}\cos\theta \tag{8}$$

ASMENORMDOC.COM : Click to view the full PDF of ASME RTP-1 2019

Figure NM1-2 Stress Intensity in a Toriconical Head

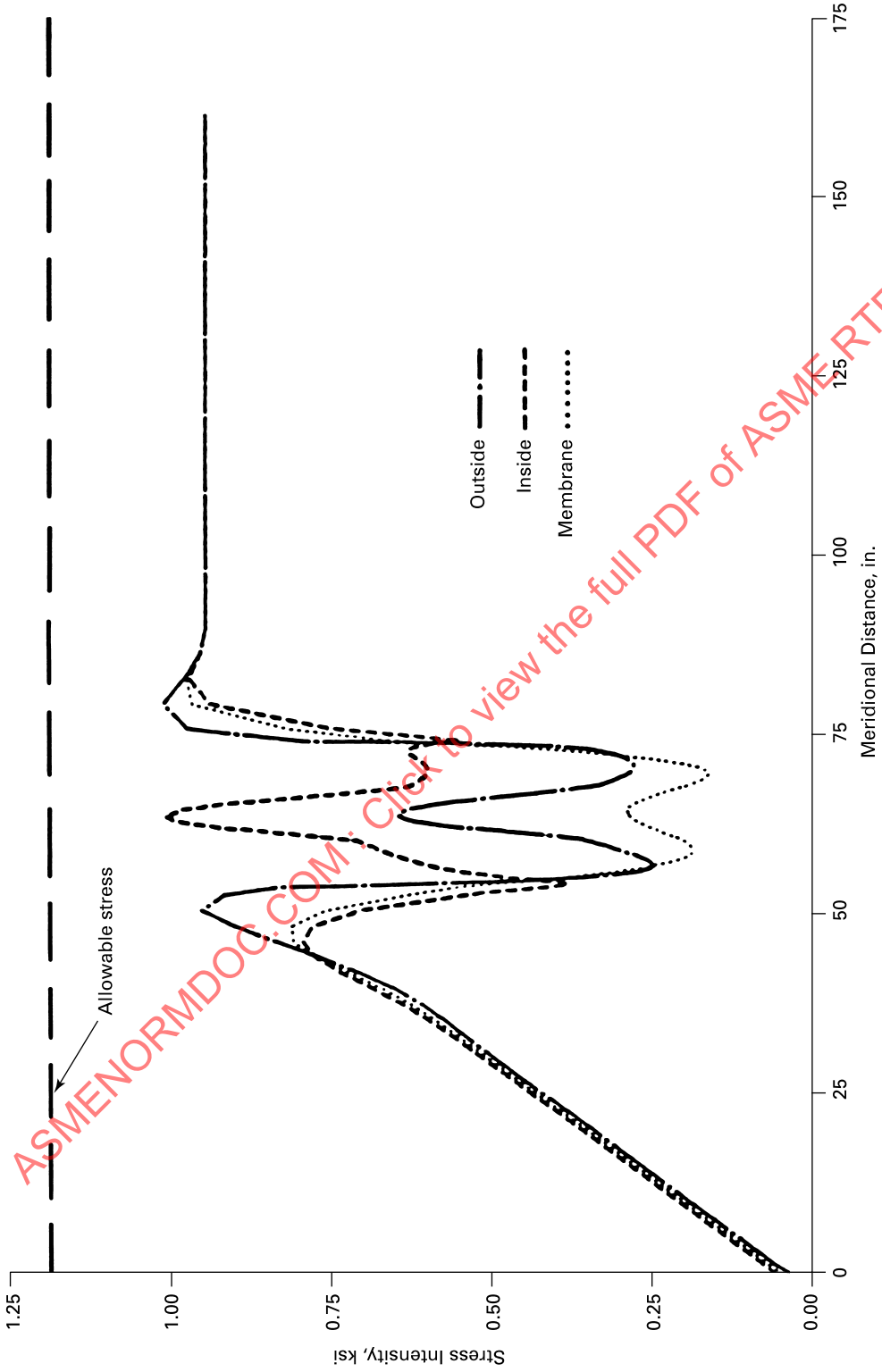

ASMENORMDOC.COM : Click to view the full PDF of ASME RTP-1 2019

Table NM1-1 Example 1, Vessel With a Toriconical Lower Head

Meridional Coordinate	Thickness, in.	Lamination Sequence
0.00	0.57	*V*, 13*M*
54.67	0.57	*V*, 13*M*
61.17	1.69	*V*, 39*M*
62.67	1.69	*V*, 39*M*
67.19	1.69	*V*, 39*M*
68.69	1.69	*V*, 39*M*
75.19	0.44	*V*, 10*M*

for 90 deg ≤ θ ≤ 270 deg.

In this example, p_0 = 15 psig, γ = 0.0397 lb/in.^{3}, R_c = 60 in., R_h = 120 in., R_k = 7.2 in., L = 18 in., and w = 118,906 lb. Then the pressure on the crown becomes

$$p = 17.382 - 4.764 \cos\theta \sin\phi \tag{9}$$

for 0 ≤ ϕ ≤ 27.91 deg.

On the knuckle

$$p = 17.382 - 0.0397[60 - 7.2(1 - \sin\phi)]\cos\theta \tag{10}$$

for 27.91 deg ≤ ϕ ≤ 90 deg.

On the sidewall away from the saddles

$$p = 17.382 - 2.382 \cos\theta \tag{11}$$

On the shell sections above the saddles

$$p = 17.382 - 2.382 \cos\theta \tag{12a}$$

for 0 ≤ θ ≤ 90 deg and 270 deg ≤ θ ≤ 360 deg, and

$$p = 17.382 + 32.663 \cos\theta \tag{12b}$$

for 90 deg ≤ θ ≤ 270 deg.

NM1-320 Computer Stress Analysis

The thrust of the example is to illustrate computing the input required by any finite element or finite difference computer program and using the stress output to determine whether the design satisfies the Standard. For this particular example, the BOSOR4 program was used, but that is incidental to the example. BOSOR4 calculates stress and deformation in axisymmetric thin-walled shell structures. Because of symmetry, only the left half of the vessel needed to be modeled.

The boundary conditions come from symmetry. Since the vessel and the loading are both symmetrical about a plane normal to the centerline of the vessel, and halfway between the tangent lines, there will be no displacement normal to the plane; i.e., the meridional displacements vanish at the plane.

NM1-330 Design Criterion

Given the loads, boundary conditions, and the thickness distribution in Figure NM1-3, BOSOR4 calculated the meridional, circumferential, and shear stresses on the inner and outer surfaces along a series of meridians. The design criteria in Mandatory Appendix M-3 determine whether the set of stress components at a point conforms to the Standard. For Type I laminates, the criteria reduces to

$$R_s = \frac{X}{\left(\sigma_\theta^2 - \sigma_\theta\sigma_z + \sigma_z^2 + 3\tau^2\right)^{1/2}} \tag{13}$$

Equation (13) defines an allowable stress intensity

$$S = X/R_s = \left(\sigma_\theta^2 - \sigma_\theta\sigma_z + \sigma_z^2 + 3\tau^2\right)^{1/2} \tag{14}$$

In this case, X = 16,000 psi and R_s = 8. Thus, S = 2,000 psi. The stresses computed by BOSOR4 were substituted into eq. (14) and compared to the allowable intensity for a large number of points on the vessel.

The first try was with thickness computed from the formulas of Subpart 3A for a vertical vessel with a pressure equal to the pressure at the bottom of the horizontal tank, 19.76 psig. The resulting head thickness is 1.16 in. (using a design factor of 10), and the sidewall thickness is 0.65 in. It is obvious that these are too thin, especially at the saddles, but by starting too thin and increasing selected thicknesses with each iteration, one arrives at a reasonable design. The joint and knuckle reinforcement used for this trial were the standard designs.

Figures NM1-6 through NM1-10 give the stress intensity distributions along a number of vessel meridians for the initial trial. The abscissa of the graphs is the arc length along the meridian, measured from the left (center) of the left head, as shown in Figure NM1-3. The angles follow the same convention as in the pressure distributions. The stress intensities were computed using eq. (14). The distribution along the 90-deg meridian (Figure NM1-8) exceeds the allowable intensity in both the knuckle and saddle regions.

After a number of iterations, the thicknesses given in Table NM1-2 were obtained. They result in the stress distributions graphed in Figures NM1-11 through NM1-15, which show that the allowable stresses are satisfied everywhere. The maximum stress intensity is 1,900 psi and occurs in the knuckle along the 90-deg meridian. The lamination sequences do not correspond exactly to the thicknesses, because they have been rounded up to the next whole layer. They assume 0.043 in. per ply of mat and 0.01 in. for a veil ply.

ASMENORMDOC.COM : Click to view the full PDF of ASME RTP-1 2019

Figure NM1-3 Horizontal Tank

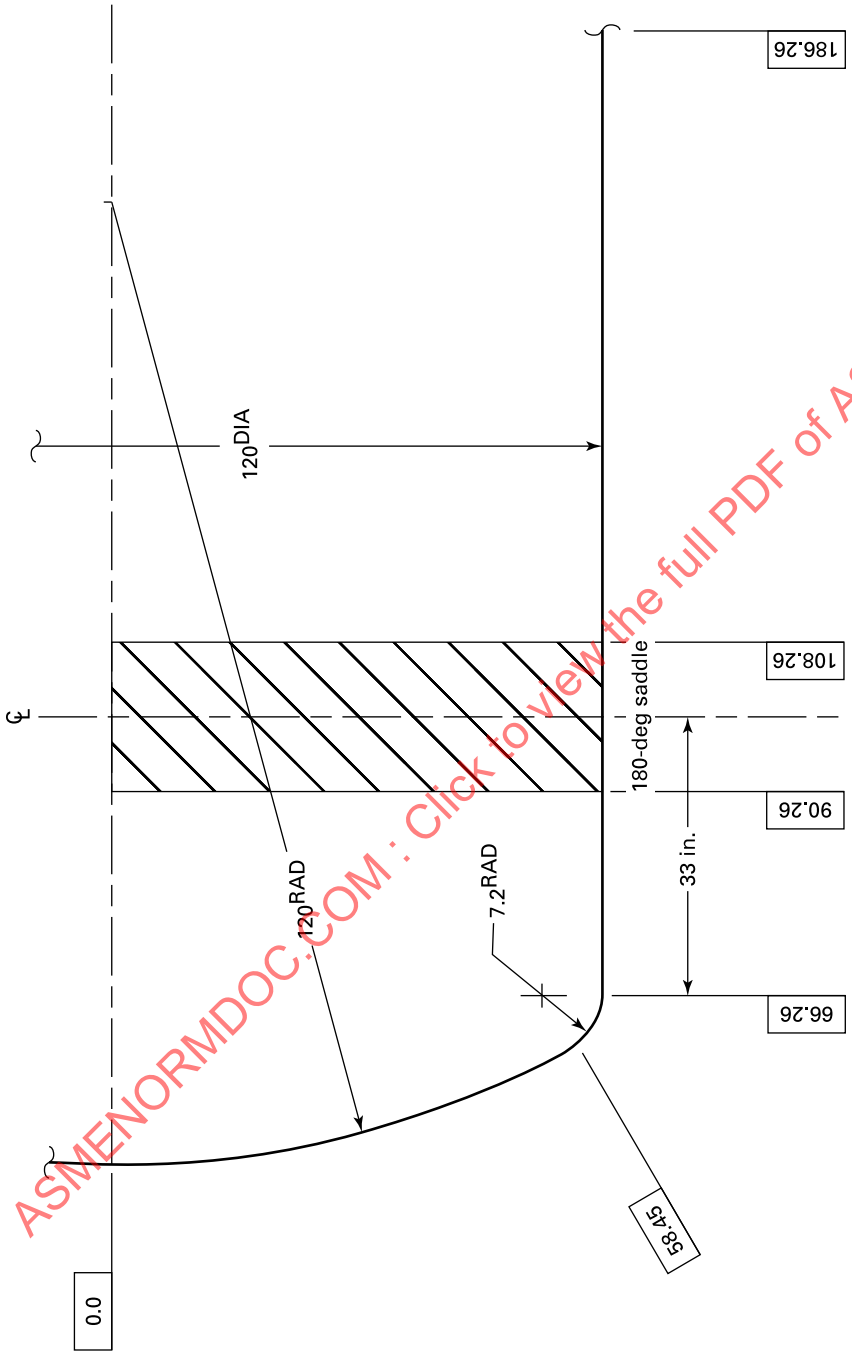

ASMENORMDOC.COM : Click to view the full PDF of ASME RTP-1 2019

Figure NM1-4 Pressure Distribution

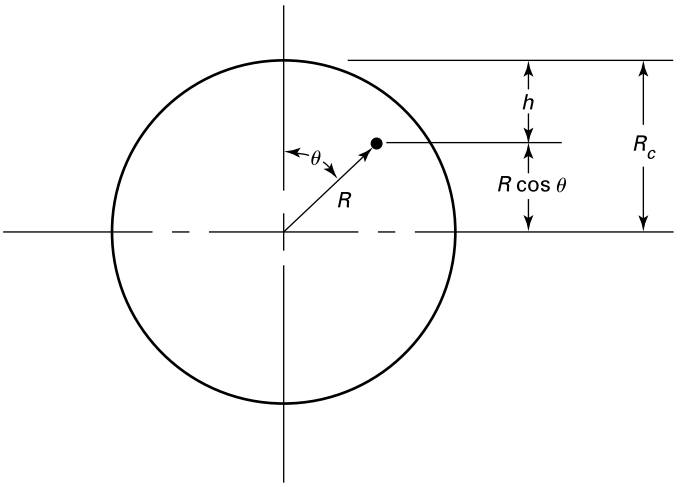

$$p = p_o + \gamma h$$
$$= p_o + \gamma(R_c - R \cos \theta)$$

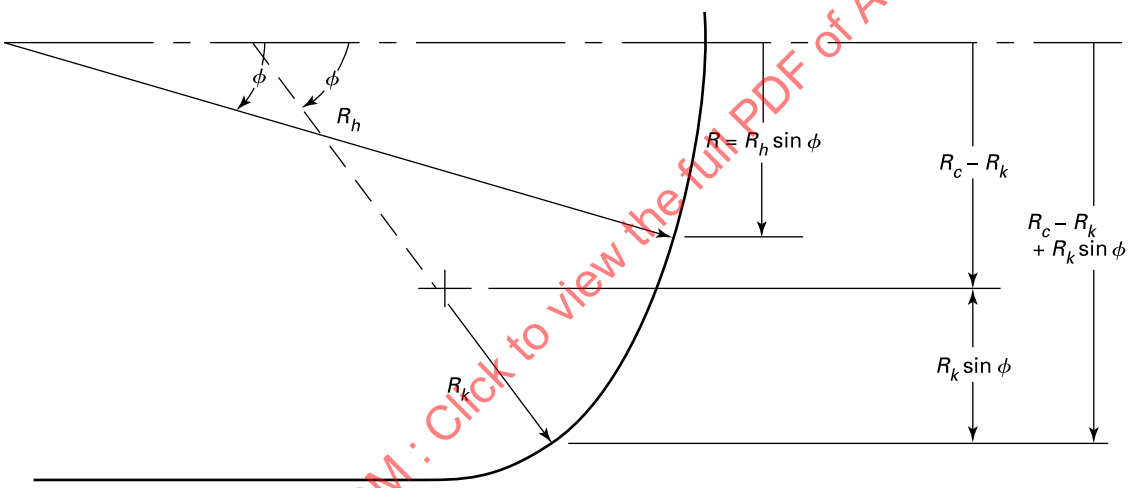

GENERAL NOTES:

(a) On the sidewall, $R = R_c$ and $p = p_o + \gamma R_c(1 - \cos \theta)$.

(b) On the crown, $R = R_h \sin \phi$ and $p = p_o + \gamma(R_c - R_h \sin \phi \cos \theta)$.

(c) On the knuckle, $R = R_c - R_k + R_k \sin \phi$ and $p = p_o + \gamma \{R_c - [R_c - R_k(1 - \sin \phi)] \cos \theta\}$.

ASMENORMDOC.COM : Click to view the full PDF of ASME RTP-1 2019

Figure NM1-5 Saddle Reaction

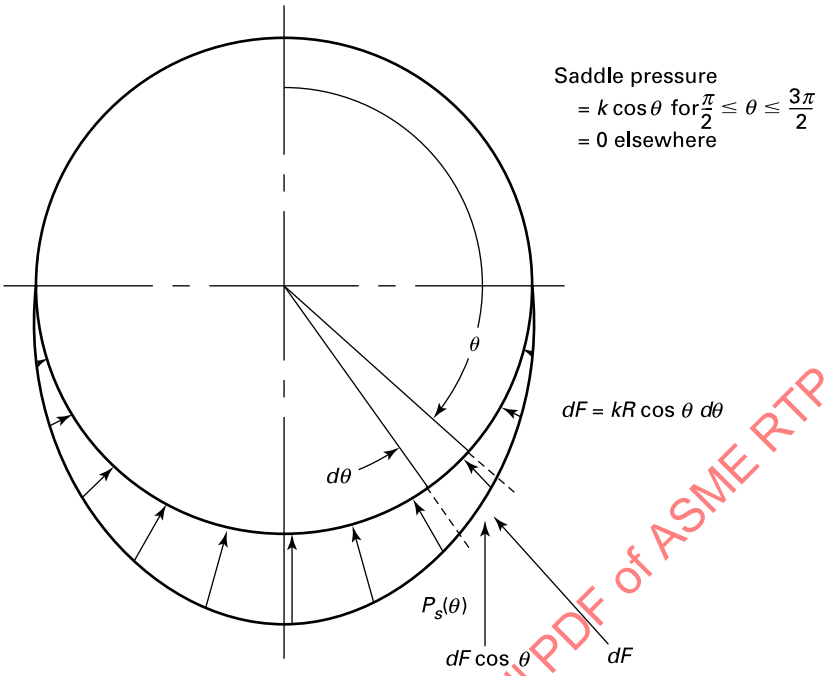

Upward reaction from the saddle is given by

$$F = L\int_{\frac{\pi}{2}}^{\frac{3\pi}{2}} dF \cos\theta = kLR\int_{\frac{\pi}{2}}^{\frac{3\pi}{2}} \cos^2\theta d\theta$$

$$\text{but } F = \frac{W}{2} \text{ and } \int_{\frac{\pi}{2}}^{\frac{3\pi}{2}} \cos^2\theta \, d\theta = \frac{\pi}{2}$$

$$\text{Then } \frac{W}{2} = \frac{k\pi LR}{2}$$

$$\text{and } k = \frac{W}{\pi RL}; \; P_s = \frac{W}{\pi RL}\cos\theta$$

ASMENORMDOC.COM : Click to view the full PDF of ASME RTP-1 2019

Figure NM1-6 Stress Along Top Meridian, Initial Try

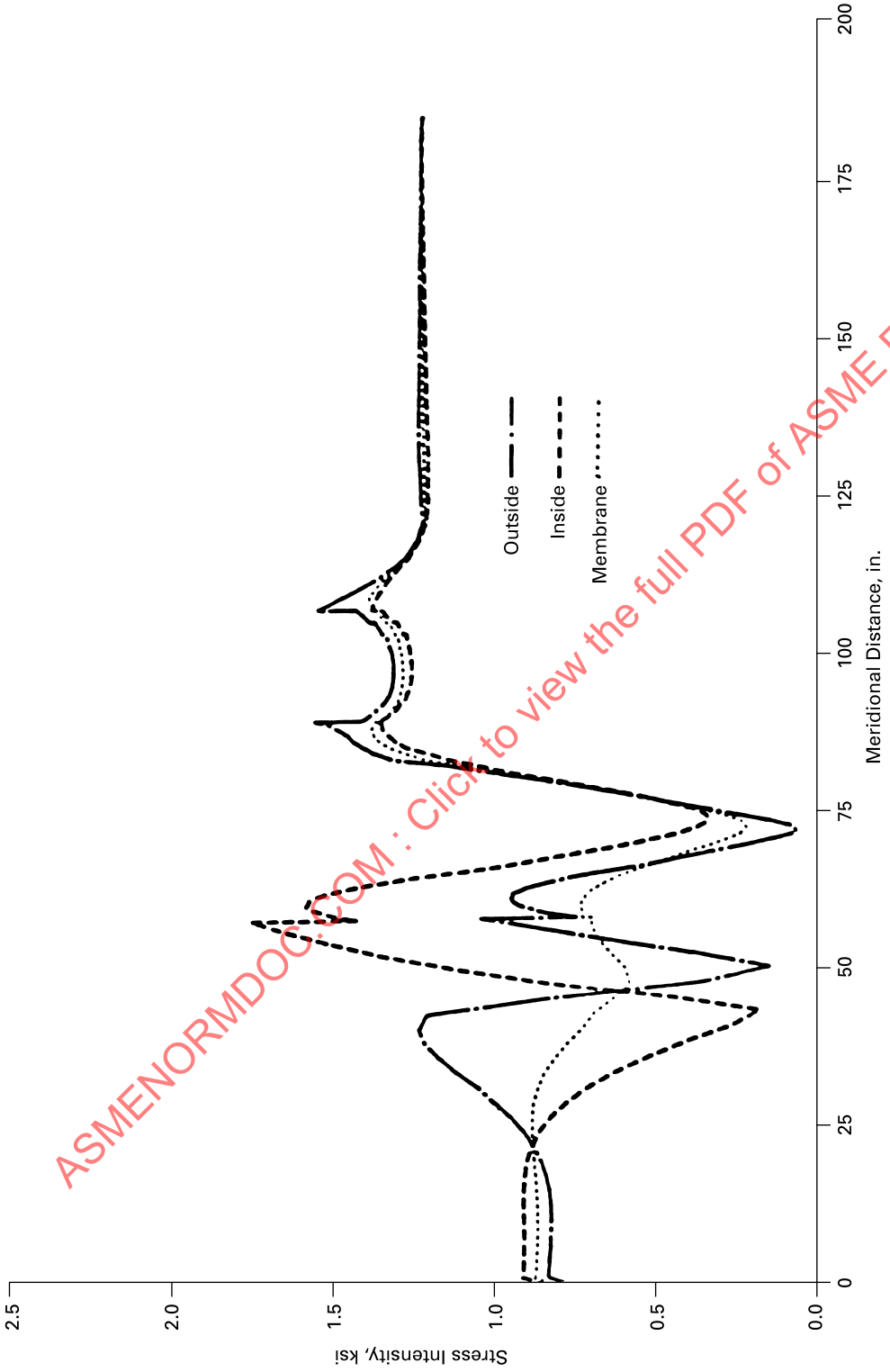

ASMENORMDOC.COM : Click to view the full PDF of ASME RTP-1 2019

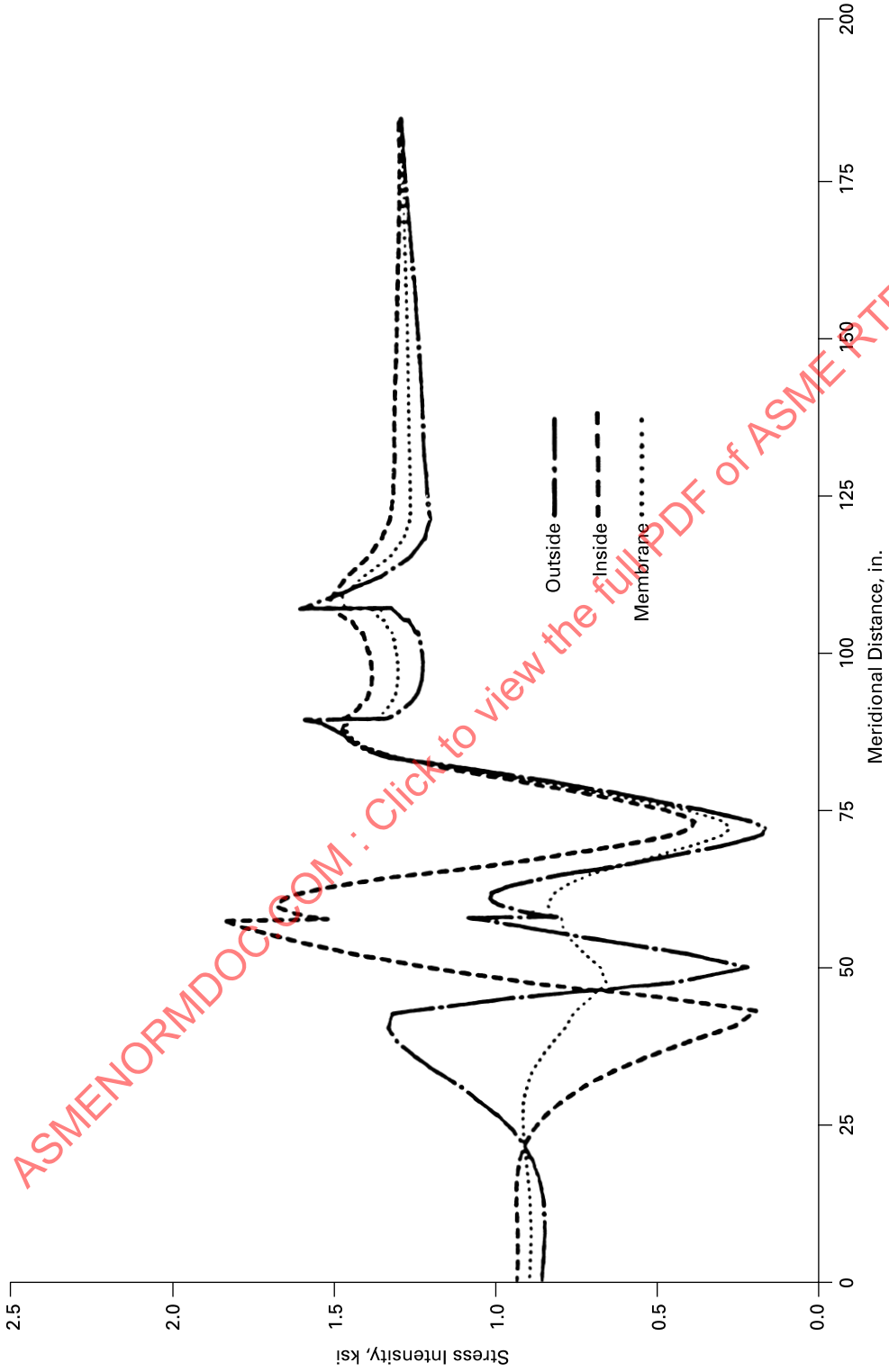

Figure NM1-7 Stress Along 45-deg Meridian, Initial Try

ASMENORMDOC.COM : Click to view the full PDF of ASME RTP-1 2019

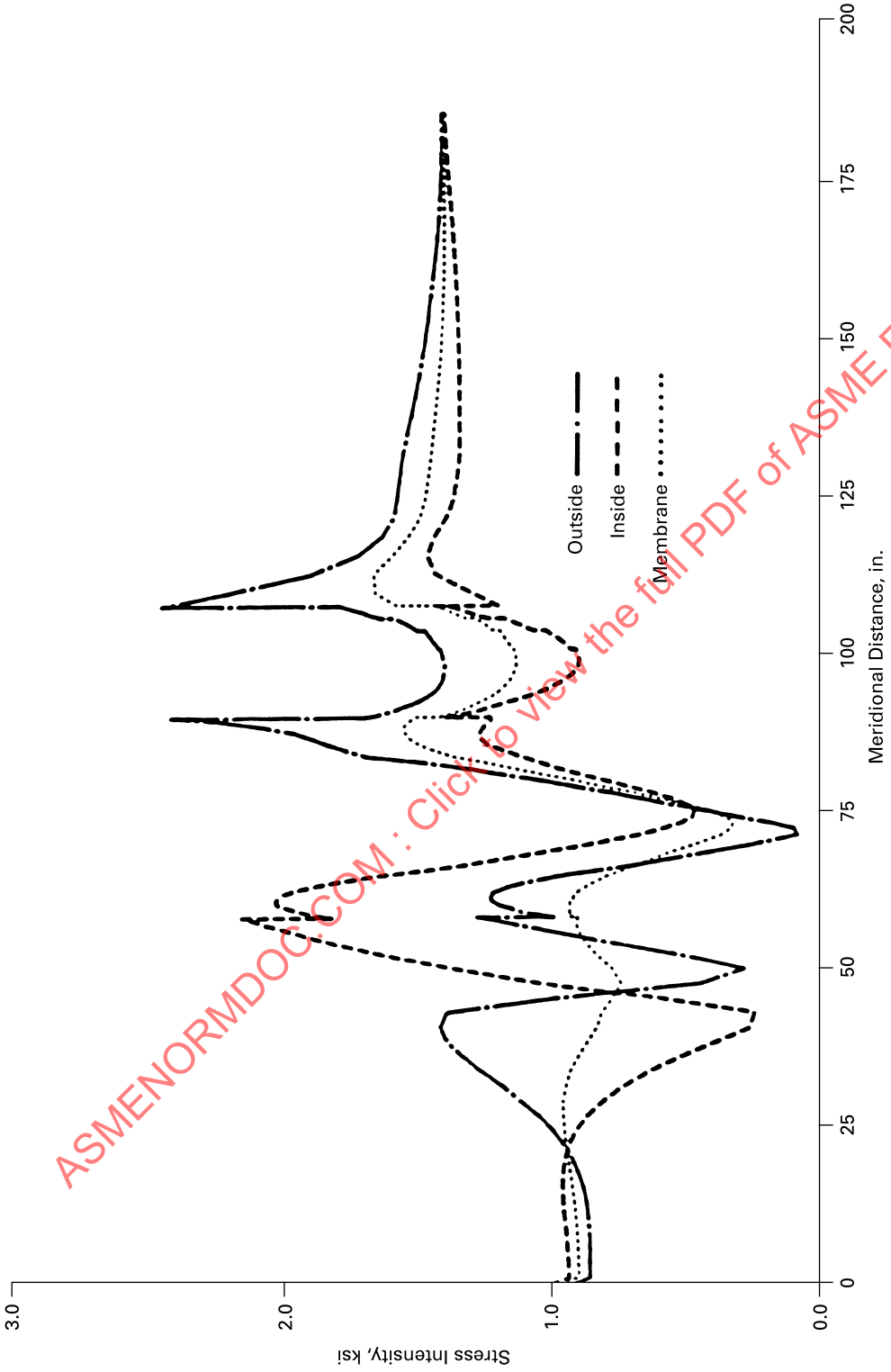

Figure NM1-8 Stress Along 90-deg Meridian, Initial Try

ASMENORMDOC.COM : Click to view the full PDF of ASME RTP-1 2019

Figure NM1-9 Stress Along 135-deg Meridian, Initial Try

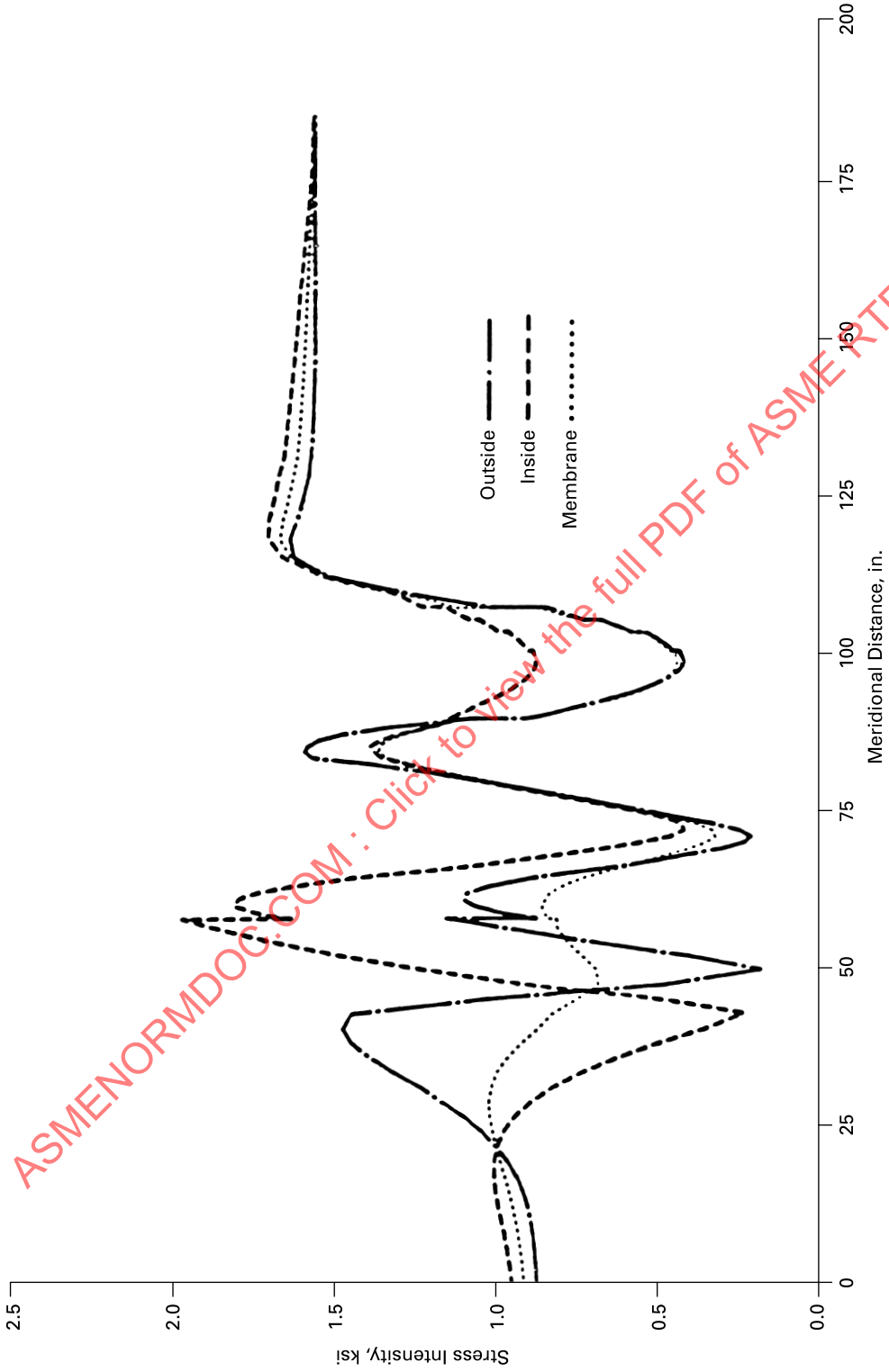

ASMENORMDOC.COM : Click to view the full PDF of ASME RTP-1 2019

Figure NM1-10 Stress Along Bottom Meridian, Initial Try

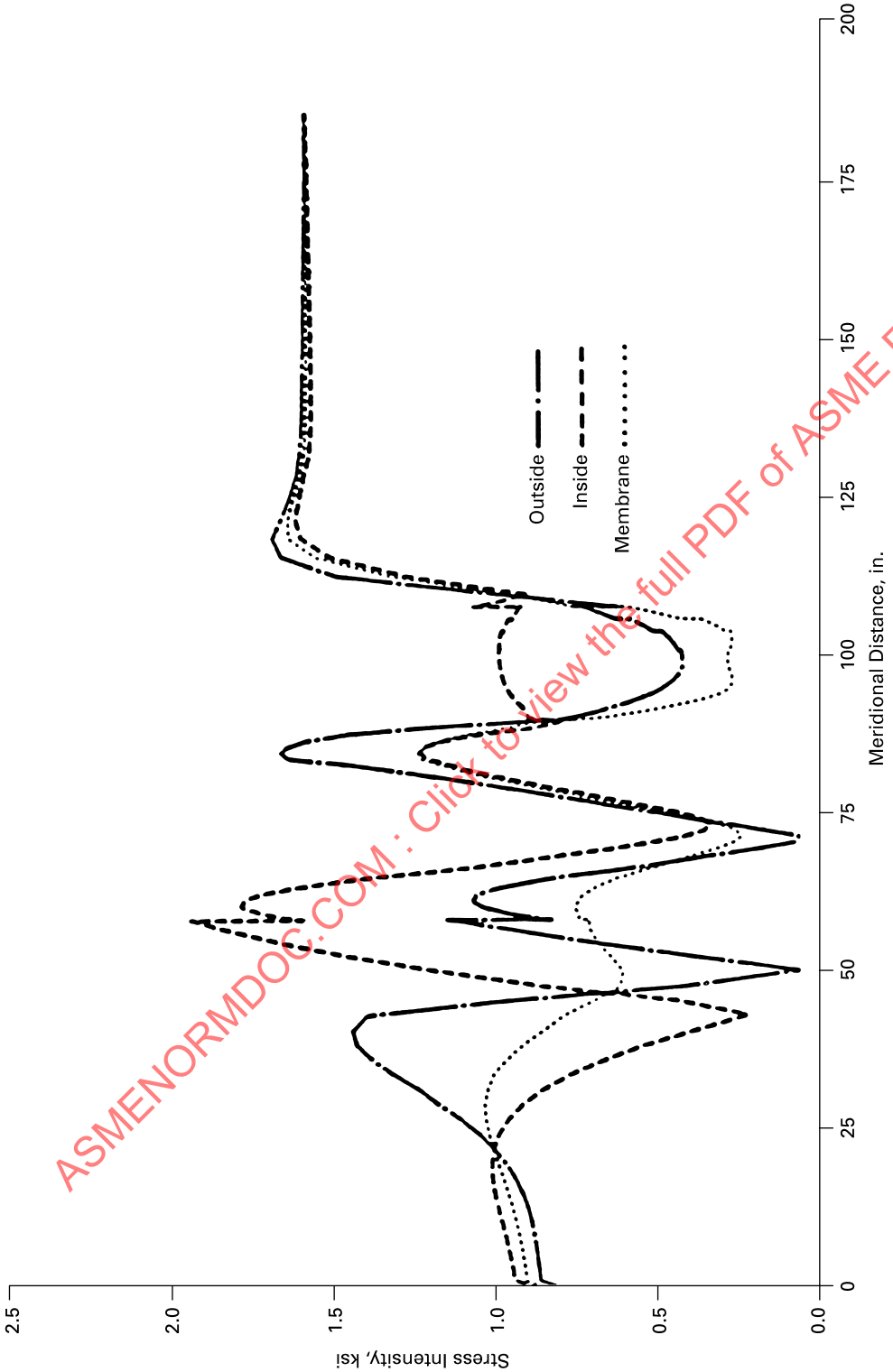

ASMENORMDOC.COM : Click to view the full PDF of ASME RTP-1 2019

Table NM1-2 Wall Thickness in a Horizontal Tank

Meridional Coordinate	Thickness, in.	Lamination Sequence
0.00	1.16	*V*, 27*M*
43.45	1.16	*V*, 27*M*
58.45	2.60	*V*, 61*M*
66.26	2.60	*V*, 61*M*
90.26	1.30	*V*, 30*M*
108.26	1.30	*V*, 30*M*
116.26	0.65	*V*, 15*M*
186.26	0.65	*V*, 15*M*

ASMENORMDOC.COM : Click to view the full PDF of ASME RTP-1 2019

Figure NM1-11 Stress Along Top Meridian, Final Try

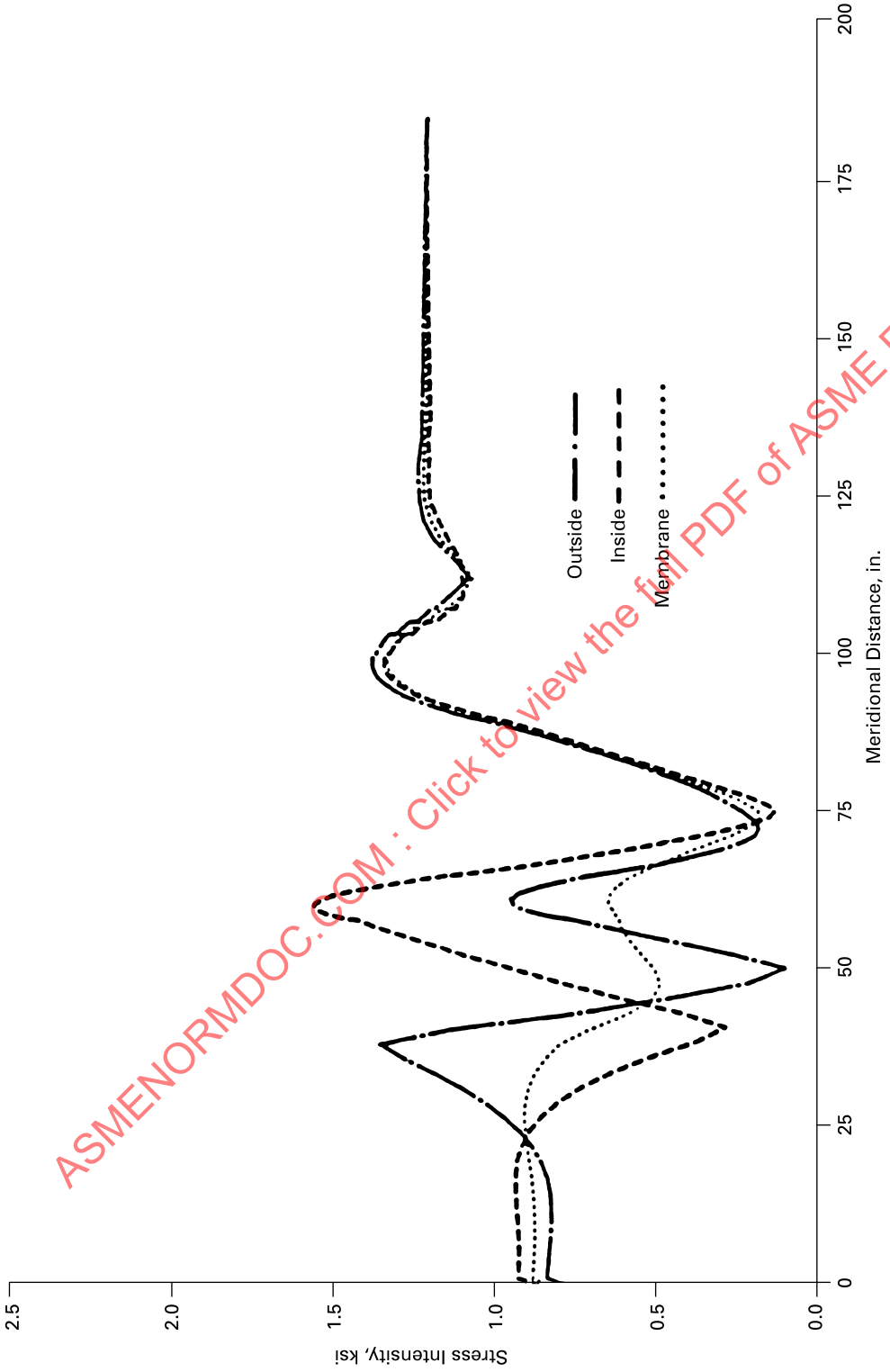

ASMENORMDOC.COM : Click to view the full PDF of ASME RTP-1 2019

Figure NM1-12 Stress Along 45-deg Meridian, Final Try

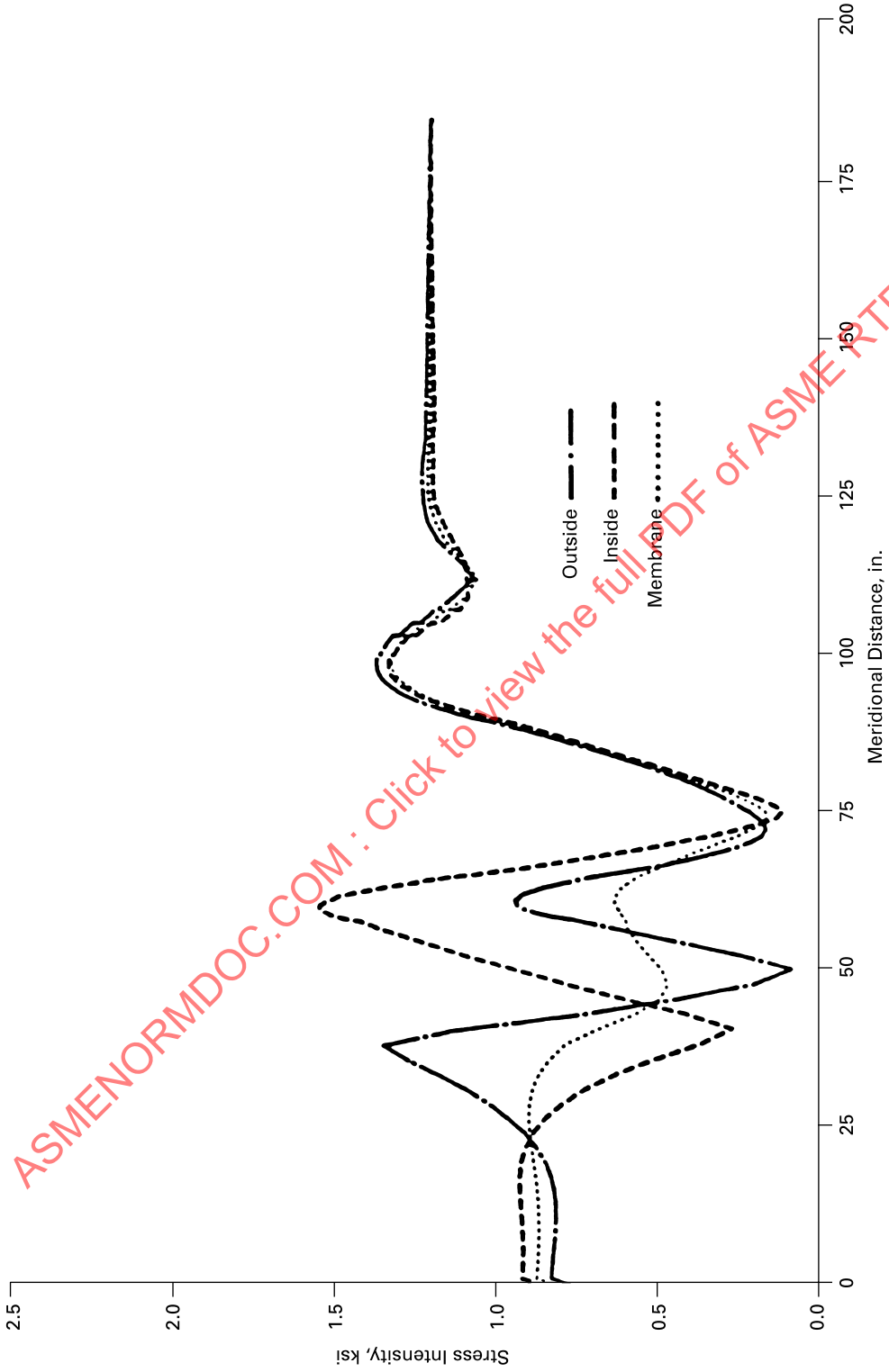

ASMENORMDOC.COM : Click to view the full PDF of ASME RTP-1 2019

Figure NM1-13 Stress Along 90-deg Meridian, Final Try

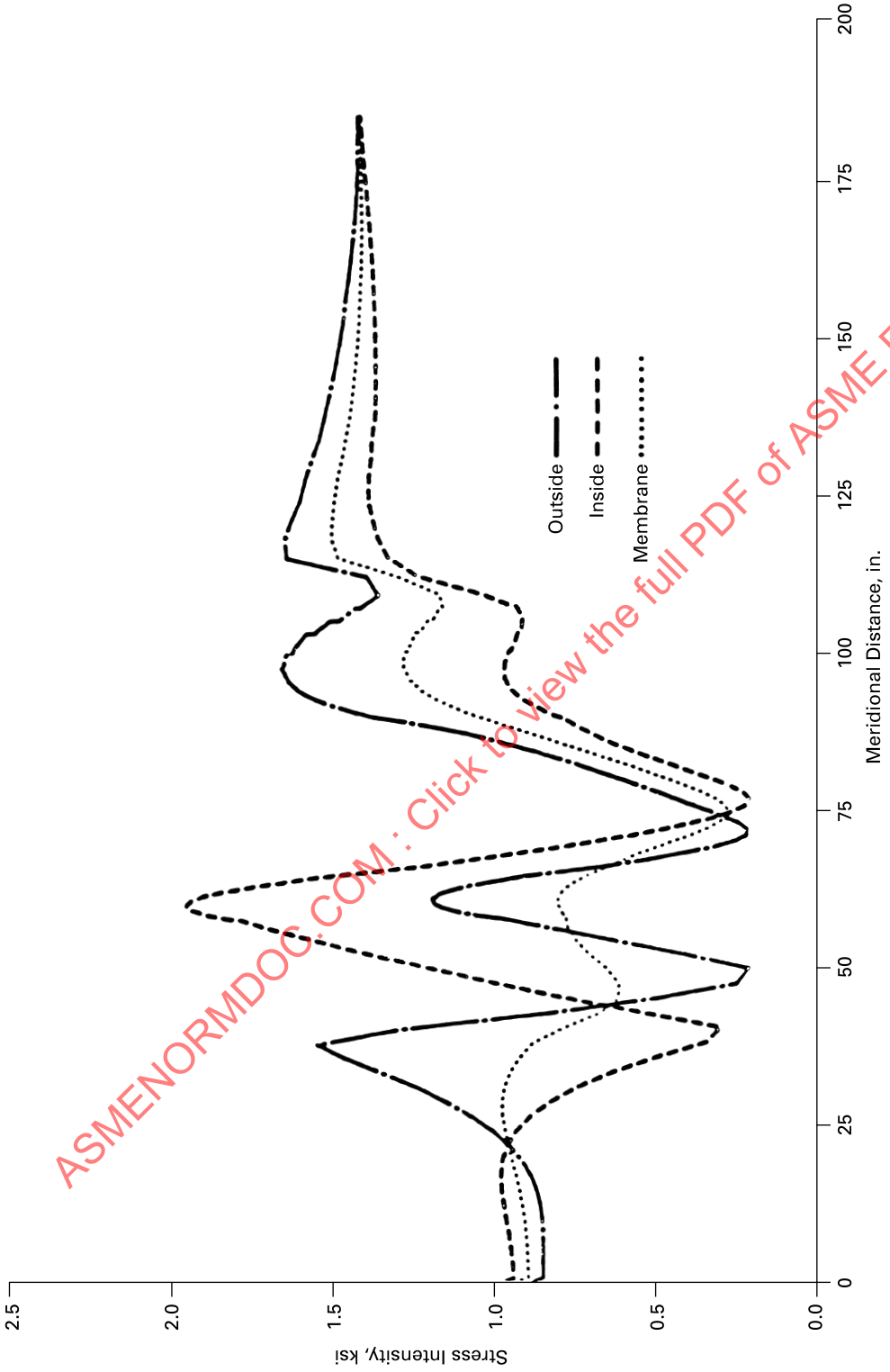

ASMENORMDOC.COM : Click to view the full PDF of ASME RTP-1 2019

Figure NM1-14 Stress Along 135-deg Meridian, Final Try

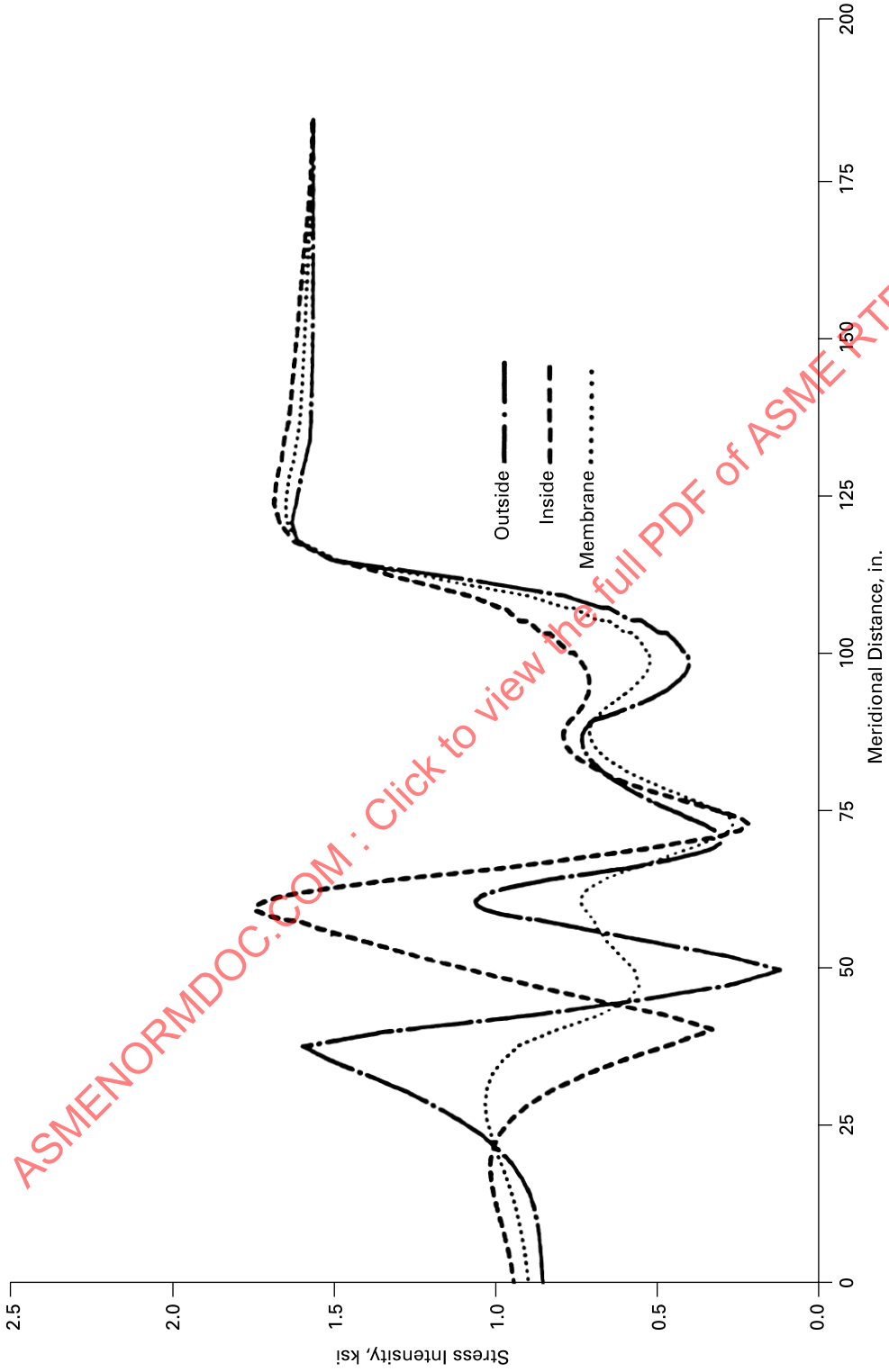

ASMENORMDOC.COM : Click to view the full PDF of ASME RTP-1 2019

Figure NM1-15 Stress Along Bottom Meridian, Final Try

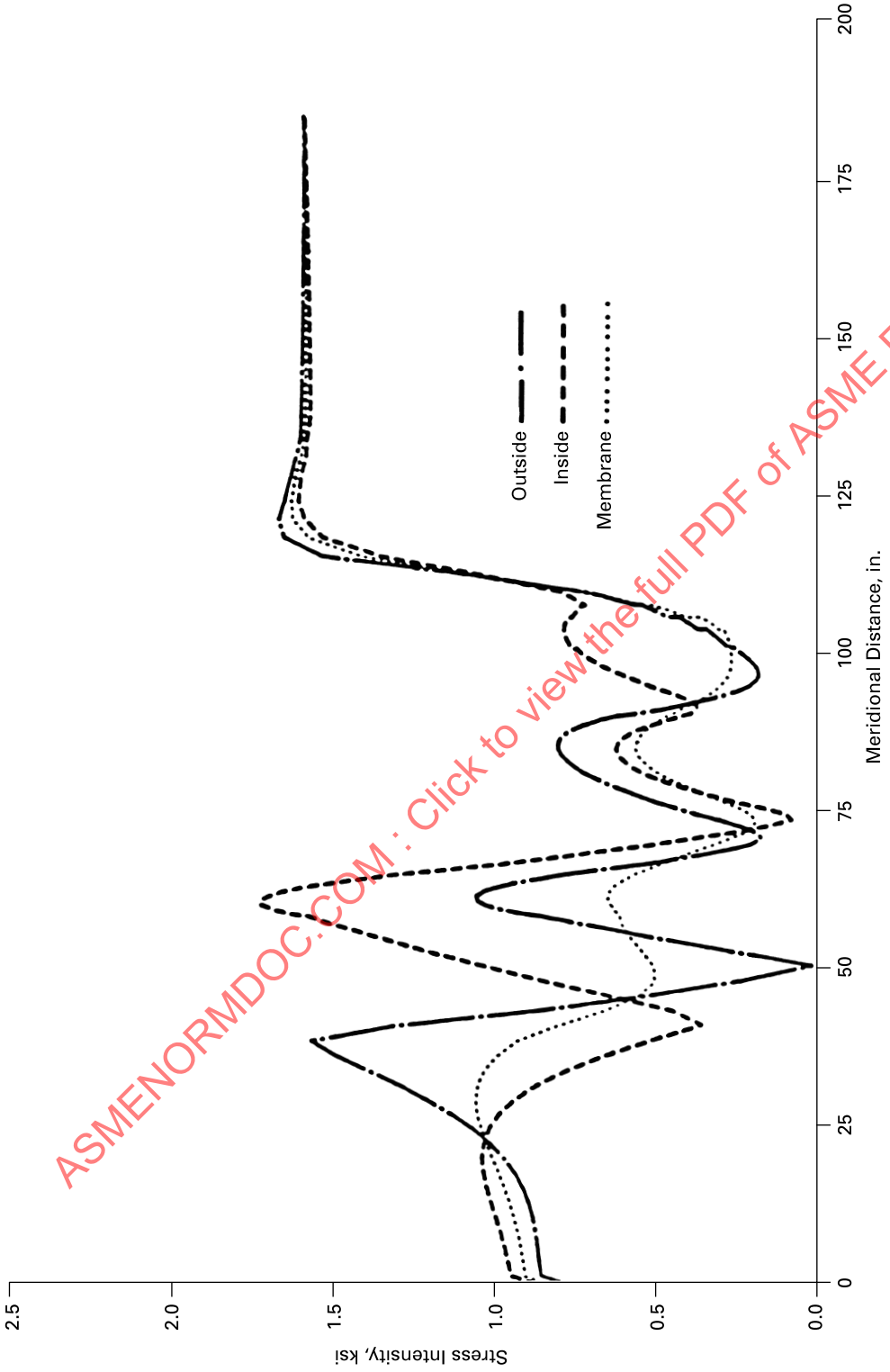

ASMENORMDOC.COM : Click to view the full PDF of ASME RTP-1 2019

NONMANDATORY APPENDIX NM-2
DESIGN OF INTEGRAL BODY FLANGES

NM2-100 SCOPE

This Appendix provides a procedure for the design of flat-face flanges that utilize full-face gaskets.

(a) For each of 14 flanges ranging in size from 24 in. to 144 in. inside diameter, a specific bolt size, number of bolts, bolt circle, and outside diameter are set forth. Each of these geometries will cover pressure up to 30 psig ± 3 psig with no change other than flange thickness and hub height. All bolt circles are sufficiently large to preclude encroachment into the hub reinforcement by back spot facing for flange bolting washers.

(b) For the convenience of the users of this Standard, a table is provided wherein the variables of shell thickness (thickness of hub at small end g_0), flange thickness, and hub reinforcement height are set forth for each of the 14 flange sizes for pressure ranges of 0 psig to 5 psig, 5 psig to 12 psig, 12 psig to 19 psig ± 3 psig, 19 psig to 24 psig ± 3 psig, and 24 psig to 30 psig ± 3 psig. A table covering recommended body flange bolt torque is also provided.

(c) A nomenclature section, design procedure guidance sheet, body flange dimension table (Table NM2-1; see also Tables NM2-2 and NM2-3), figures and tables covering various design factors, and a design example of a typical flange are provided.

NM2-200 NOMENCLATURE

The following symbols are used in the formulas for the design of flat-face body flanges (see Figure NM2-1):

A = outside diameter of flange, in.

A_B = cross-sectional area of bolts using the root diameter of the thread or diameter of unthreaded portion, whichever is less, in.^{2}

A_m = total required cross-sectional area of bolts, in.^{2}

a = nominal bolt diameter, in.

B = inside diameter of flange, in.

b = effective gasket or joint-contact surface seating width, in.

C = bolt-circle diameter, in.

d = shape factor
= $(U/V)(h_0)(g_0)^2$

d_1 = bolt hole diameter, in.

e = shape factor
= F/h_0

F = shape factor (from Figure NM2-2)

f = hub stress correction factor (from Figure NM2-3); for calculated values less than 1, use f=1

G = diameter at location of gasket load reaction, in.

g_0 = thickness of hub at small end, in.

g_1 = thickness of hub at back of flange, in.
= $g_0 + t/2$

H = total hydrostatic end force, lb
= $0.7854G^2P$

H_D = hydrostatic end force on area inside of flange, lb

H_G = gasket load, operating

H'_{gy} = compression load required to seat gasket outside G diameter

H_P = total joint-contact-surface compression load, lb
= $2b\pi Gmp = H - H_D$

H'_P = total adjusted joint-contact-surface compression for full-face gasketed flange, lb
= $(h_G/h'_G)H_P$

H_T = difference between total hydrostatic end force and the hydrostatic end force area inside of flange, lb (N)
= $H - H_D$

h = hub length, in.

h_D = radial distance from bolt circle to the circle on which H_D acts, in.

h_G = bolt circle on which H_G acts, in.

h'_G = radial distance from bolt circle to the circle on which H_GG acts, in.

h''_G = lever arm

h_T = radial distance from bolt circle to the circle on which H_T acts, in.

h_0 = shape factor, in.
= $(Bg_0)^{1/2}$

K = ratio of outside diameter of flange to inside diameter of flange
= A/B (see Figure NM2-4)

L = shape factor
= $[(te + 1)/t] + t^3/d$

M = unit load, operating, lb
= M_O/B

M_D = component of moment due to H_D, in.-lb
= $H_D h_D$

ASMENORMDOC.COM : Click to view the full PDF of ASME RTP-1 2019

(19) **Table NM2-1 Typical Body Flange Dimensions and Recommended Bolt Torque Values for RTP Body Flanges**

Minimum Inside Diameter, *B*, in.	Minimum Outside Diameter, *A*, in.	Bolt Circle Diameter, *C*, in. [Notes (1), (2)]	Design Pressure 5-20 psi Bolt Size, in.	Bolt Hole Diameter, in. [Note (3)]	Design Pressure 25-30 psi Bolt Size, in.	Bolt Hole Diameter, in. [Note (3)]	Number of Bolts	Sealing Bolt Torque Required, ft-lb
24	29½	28	½	⅝	½	⅝	20	9
30	35½	34	½	⅝	½	⅝	28	12
36	41½	40	½	⅝	½	⅝	32	13
42	47½	46	½	⅝	½	⅝	40	14
48	54	52½	½	⅝	½	⅝	44	16
54	60	58½	½	⅝	½	⅝	48	18
60	66	64½	½	⅝	½	⅝	52	18
72	78½	77	½	⅝	⅝	¾	64	21
84	91	89½	½	⅝	⅝	¾	76	25
96	104½	102½	⅝	¾	¾	⅞	84	35
108	117	115	⅝	¾	¾	⅞	96	39
120	129½	127½	⅝	¾	¾	⅞	104	45
132	142	140	⅝	¾	¾	⅞	116	46
144	155	152½	¾	⅞	⅞	1	120	62

GENERAL NOTES:

(a) The above torque values were calculated using well lubricated low alloy carbon steel bolts with a maximum recommended stud stress of 18,800 psi and a maximum nut or friction factor of 0.15. The torque values were calculated to be sufficient to seal gaskets with *m* and *y* values given in Note (a) in Tables NM2-2 and NM2-3.

(b) For flanges having surface irregularities and requiring higher torque values to effect sealing, torques can be increased to 25 ft-lb for ½ in. diameter bolts, 50 ft-lb for ⅝ in. diameter bolts, and 83 ft-lb for ¾ in. diameter bolts without incurring flange damage.

(c) Lower torques can be used for lower pressure applications.

(d) These dimensions were used in designing the flanges shown in Table NM2-2. Alternate flange geometries can be considered using the design method illustrated in this Appendix. Also, see Table NM2-3.

(e) If higher torques are required to seal harder gaskets, the methods of Nonmandatory Appendix NM-2 or Nonmandatory Appendix NM-12 shall be used to design the flange.

NOTES:

(1) ± 0.06 in. (ASME B16.5).

(2) ± 0.06 in. eccentricity between bolt circle and center of shell.

(3) ± 0.03 in. center to center of adjacent bolt holes (ASME B16.5).

M_G = component of moment due to H_G operating, in.-lb
= $H_G h''_G$

M_O = total moment acting upon flange, for the operating conditions, in.-lb

M_T = component of moment due to H_T, in.-lb
= $H_T h_T$

m = gasket factor

N_1 = shape factor
= $\frac{4}{3}\, te + 1$

n = number of bolts

P = design pressure, psi

R = radial distance from bolt circle to point of intersection of hub and back of flange, in.

S_a = allowable bolt stress at atmospheric temperature, psi

S_b = allowable bolt stress at design temperature, psi

S_{fo} = allowable design stress for flange material at design temperature, psi

S_H = calculated longitudinal stress in hub, psi

S_R = calculated radial stress in flange, psi

S_{RAD} = calculated radial stress at bolt circle due to reverse moment, psi

S_T = calculated tangential stress in flange, psi

T = shape factor involving K (see Figure NM2-4)

t = flange thickness, in.

U = shape factor involving K (see Figure NM2-4)

V = shape factor (see Figure NM2-5)

W = average flange bolt load, lb

Wm_1 = required bolt load, operating conditions, lb

Wm_2 = required bolt load, gasket seating, lb

Y = shape factor involving K (see Figure NM2-4)

y = gasket or joint-contact surface unit seating load, psi

Z = shape factor involving K (see Figure NM2-4)

ASMENORMDOC.COM : Click to view the full PDF of ASME RTP-1 2019

NM2-300 EXAMPLE CALCULATION

Check stresses for a 72-in. full-face flange, given the following (see Figure NM2-6):

$A = 78\frac{1}{2}$ in.
$B = 72$ in.
$C = 77$ in.
$P = 30.0$ psi
$m = 0.50$
$y = 50$ psi

Assume

$A_B = 8.06$ in.^{2}
$S_a = 25{,}000$ psi
$S_b = 25{,}000$ psi
$S_{fo} = 3{,}000$ psi
$d_1 = \frac{5}{8}$ in.
$g_0 = \frac{3}{4}$ in.
$h = 4\frac{1}{2}$ in.
$n = 64$
$t = 1\frac{7}{16}$ in.

Calculate bolt, flange, and hub stresses

$$h_G = (C - B)/4 = (77 - 72)/4 = 1.250 \text{ in.}$$

$$h'_G = (A - C)/4 = (78.5 - 77)/4 = 0.375 \text{ in.}$$

$$G = C - 2h_G = 77 - (2)(1.250) = 74.5 \text{ in.}$$

$$b = 0.25(C - B) = 0.25(77 - 72) = 1.25 \text{ in.}$$

$$\begin{aligned} H'_{gy} &= (h_G/h'_G)(b\pi Gy) \\ &= (1.25/0.375)(1.25 \times \pi \times 74.5 \times 50) \\ &= 48{,}760 \text{ lb} \end{aligned}$$

$$\begin{aligned} W_{m_2} &= b\pi Gy + H'_{gy} \\ &= (1.25)(\pi)(74.5)(50) + 48{,}760 \\ &= 63{,}388 \text{ lb} \end{aligned}$$

$$H_p = 2b\pi GmP = (2)(1.25)(\pi)(74.5)(0.5)(30) = 8{,}777 \text{ lb}$$

$$H'_p = H_p(h_G/h'_G) = 8{,}777(1.25/0.375) = 29{,}257 \text{ lb}$$

$$H = 0.7854G^2P = 0.7854 \times (74.5)^2 \times 30 = 130{,}775 \text{ lb}$$

$$\begin{aligned} W_{m_1} &= H + H_p + H'_p \\ &= 130{,}775 + 8{,}777 + 29{,}257 \\ &= 168{,}809 \text{ lb} \end{aligned}$$

A_m equals greater of Wm_2/S_a or Wm_1/S_b as follows:

$$63{,}388/25{,}000 = 2.536 < 168{,}809/25{,}000 = 6.752 \text{ in.}^2$$

$$\begin{aligned} A_B &= (64)\tfrac{1}{2} \text{ in. diameter bolts} \\ &= (64)(0.126) = 8.064 \text{ in.}^2 \end{aligned}$$

$$\begin{aligned} W &= 0.5(A_m + A_b)S_a \\ &= (0.5)(6.752 + 8.064)(25{,}000) = 185{,}200 \text{ lb} \end{aligned}$$

$$g_1 = (t/2) + g_0 = (1.4375/2) + 0.75 = 1.469 \text{ in.}$$

$$H_D = 0.7854B^2P = 0.7854 \times (72)^2 \times 30 = 122{,}145 \text{ lb}$$

$$H_T = H - H_D = 130{,}775 - 122{,}145 = 8{,}630 \text{ lb}$$

$$h_D = R + 0.5g_1 = 1.031 + (0.5)(1.469) = 1.766 \text{ in.}$$

$$\begin{aligned} h_T &= 0.5(R + g_1 + h_G) \\ &= 0.5(1.031 + 1.469 + 1.25) = 1.875 \text{ in.} \end{aligned}$$

$$M_D = H_D h_D = (122{,}145)(1.766) = 215{,}647 \text{ in.-lb}$$

$$M_T = H_T h_T = (8{,}630)(1.875) = 16{,}181 \text{ in.-lb}$$

$$M_O = M_D + M_T = 215{,}647 + 16{,}181 = 231{,}828 \text{ in.-lb}$$

$$H_G = W - H = 185{,}200 - 130{,}775 = 54{,}425 \text{ lb}$$

$$\begin{aligned} h''_G &= (h_G h'_G)/(h_G + h'_G) \\ &= (1.25 \times 0.375)/(1.25 + 0.375) = 0.2885 \text{ in.} \end{aligned}$$

$$M_G = H_G h''_G = (54{,}425)(0.2885) = 15{,}702 \text{ in.-lb}$$

$$K = A/B = 78.5/72 = 1.090$$

$T = 1.88$ (from Figure NM2-4 or Table NM2-4)
$Z = 11.63$ (from Figure NM2-4 or Table NM2-4)
$Y = 22.44$ (from Figure NM2-4 or Table NM2-4)
$U = 24.66$ (from Figure NM2-4 or Table NM2-4)

$$g_1/g_0 = 1.469/0.75 = 1.9587$$

$$h_0 = (Bg_0)^{1/2} = (72 \times 0.75)^{1/2} = 7.348$$

ASMENORMDOC.COM : Click to view the full PDF of ASME RTP-1 2019

(19) **Table NM2-2 Body Flange Design Using Full-Face Gaskets, Maximum Stress Less Than 3,000 psi — Type II Laminates**

Nominal Flange Diameter	*P*, psi	*t*, in.	*g*, in.	Nominal Flange Diameter	*P*, psi	*t*, in.	*g*, in.
24	5	0.5	0.25	72	5	1.063	0.25
	10	0.5	0.25		10	1.25	0.313
	15	0.625	0.25		15	1.25	0.375
	20	0.75	0.25		20	1.25	0.5
	25	0.813	0.313		25	1.375	0.625
	30	0.875	0.313		30	1.438	0.75
30	5	0.5	0.25	84	5	1.25	0.25
	10	0.563	0.25		10	1.375	0.375
	15	0.688	0.25		15	1.438	0.438
	20	0.813	0.313		20	1.438	0.563
	25	0.875	0.313		25	1.563	0.75
	30	0.938	0.375		30	1.625	0.875
36	5	0.5	0.25	96	5	1.563	0.25
	10	0.625	0.25		10	1.625	0.438
	15	0.813	0.25		15	1.688	0.5
	20	0.875	0.313		20	1.625	0.688
	25	0.938	0.375		25	1.813	0.813
	30	1.0	0.375		30	1.938	1.0
42	5	0.5	0.25	108	5	1.813	0.25
	10	0.75	0.25		10	1.875	0.375
	15	0.938	0.25		15	1.875	0.563
	20	0.938	0.375		20	1.813	0.75
	25	1.0	0.375		25	1.938	0.875
	30	1.063	0.5		30	2.125	1.125
48	5	0.625	0.25	120	5	2.125	0.25
	10	0.938	0.25		10	2.0	0.438
	15	1.0	0.375		15	2.0	0.625
	20	1.0	0.375		20	2.0	0.813
	25	1.125	0.5		25	2.125	1.0
	30	1.375	0.5		30	2.313	1.25
54	5	0.688	0.25	132	5	2.438	0.313
	10	1.0	0.25		10	2.125	0.5
	15	1.125	0.375		15	2.188	0.813
	20	1.063	0.375		20	2.125	0.875
	25	1.188	0.5		25	2.313	1.125
	30	1.25	0.563		30	2.438	1.375
60	5	0.813	0.25	144	5	2.375	0.313
	10	1.0	0.313		10	2.375	0.5
	15	1.125	0.375		15	2.5	0.75
	20	1.125	0.438		20	2.5	1.0
	25	1.188	0.5		25	2.438	1.25
	30	1.313	0.625		30	2.625	1.438

ASMENORMDOC.COM : Click to view the full PDF of ASME RTP-1 2019

Table NM2-2 Body Flange Design Using Full-Face Gaskets, Maximum Stress Less Than 3,000 psi — Type II Laminates (Cont'd)

GENERAL NOTES:

(a) Flange design based on the following criteria:

P = allowable pressure, psi
t = flange thickness, in.
g = thickness of hub at end of taper (pipe thickness), in. — Type II laminate properties
h = hub length, in. = $3t$
m = gasket factor (assumed m = 0.5)
Y = gasket unit seating load (assumed Y = 50 psi)
maximum flange and hub stress = 3,000 psi (based on use of mat/woven roving reinforcement, Type II laminate)
maximum bolt stress = 18,800 psi (which is recommended for any low alloy carbon steel bolting or alloy bolting used)
maximum design temperature = 180°F

(b) This Table is referenced in Table NM2-1.

$$h/h_0 = 4.5/7.348 = 0.612$$

$$F = 0.808 (\text{from Figure NM2-2})$$

$$V = 0.208 \text{ (from Figure NM2-5)}$$

$$f = 1.0 \text{ (min.; from Figure NM2-3)}$$

$$e = F/h_0 = 0.808/7.348 = 0.110$$

$$\begin{aligned} d &= (U/V)h_0 g_0^2 \\ &= (24.66/0.208) \times 7.348 \times (0.750)^2 = 490.0 \end{aligned}$$

$$M = M_O/B = 231{,}828/72 = 3,\ 220$$

Approximation of Required Thickness t

$$\begin{aligned} t &= 0.29(MY/S_{f0})^{1/2} \\ &= (0.29)(3{,}220 \times 22.44/3{,}000)^{1/2} \\ &= 1.423 \text{ in. (use 1.4375 in.)} \end{aligned}$$

$$N_1 = \frac{4}{3}te + 1 = (1.33)(1.4375)(0.110) + 1 = 1.210$$

$$\begin{aligned} L &= [(te + 1)/T] + t^3/d \\ &= [(1.4375 \times 0.110 + 1)/1.88] + (1.4375)^3/490 \\ &= 0.622 \end{aligned}$$

Stress Calculations

(a) longitudinal stress in hub

$$\begin{aligned} S_H &= fM/Lg_1^2 \\ &= (1 \times 3{,}220)/[0.622 \times (1.469)^2] \\ &= 2{,}399 \text{ psi} < 3{,}000 \text{ psi} \end{aligned}$$

(b) radial stress in flange

$$\begin{aligned} S_R &= N_1 M/Lt^2 \\ &= (1.21 \times 3{,}220)/[0.622 \times (1.4375)^2] \\ &= 3{,}031 \text{ psi} > 3{,}000 \text{ psi} \end{aligned}$$

(c) tangential stress in flange

$$\begin{aligned} S_T &= YM/t^2 - ZS_R \\ &= (22.44)(3{,}220)/(1.4375)^2 - (11.63)(3{,}031) \\ &= -283 \text{ psi} < 3{,}000 \text{ psi} \end{aligned}$$

(d) greater of $0.5(S_H + S_R)$ or $0.5(S_H + S_T)$

$$0.5(2{,}399 + 3{,}031) = 2{,}715 \text{ psi}$$
$$>0.5(2{,}399 + 283) = 1{,}341 \text{ psi}$$
$$2{,}715 \text{ psi} < 3{,}000 \text{ psi}$$

(e) radial stress at bolt circle

$$\begin{aligned} S_{RAD} &= \frac{6M_G}{t^2(\pi C - nd_1)} \\ &= \frac{(6)(15{,}702)}{(1.4375)^2(\pi \times 77 - 64 \times 0.625)} = 225 \text{ psi} \end{aligned}$$

ASMENORMDOC.COM : Click to view the full PDF of ASME RTP-1 2019

(19) **Table NM2-3 Body Flange Design Using Full-Face Gaskets, Maximum Stress Less Than 1,800 psi — Type I Laminates**

Nominal Flange Diameter	*P*, psi [Note (1)]	*t*, in.	*g*, in.	Nominal Flange Diameter	*P*, psi [Note (1)]	*t*, in.	*g*, in.
24	5	0.625	0.25	72	5	1.313	0.25
	10	0.625	0.25		10	1.313	0.438
	15	0.813	0.25		15	1.375	0.625
	20	0.938	0.313		20	1.5	0.813
	25	1.063	0.375		*25	1.625	1.0
	30	1.063	0.438		*30	1.75	1.25
30	5	0.625	0.25	84	5	1.438	0.25
	10	0.75	0.25		10	1.5	0.5
	15	0.875	0.313		15	1.563	0.75
	20	1.0	0.375		20	1.688	1.0
	25	1.063	0.438		*25	1.813	1.188
	30	1.125	0.5		*30	1.938	1.313
36	5	0.625	0.25	96	5	1.75	0.313
	10	0.875	0.25		10	1.813	0.563
	15	0.938	0.375		15	1.813	0.813
	20	1.0	0.438		20	2.0	1.125
	25	1.125	0.5		*25	2.125	1.375
	30	1.188	0.625		*30	2.25	1.625
42	5	0.688	0.25	108	5	2.0	0.313
	10	0.938	0.25		10	1.938	0.625
	15	1.0	0.375		15	1.938	0.938
	20	1.125	0.5		20	2.188	1.25
	25	1.188	0.625		*25	2.313	1.5
	30	1.25	0.75		*30	2.438	1.813
48	5	0.875	0.25	120	5	2.125	0.375
	10	1.0	0.313		10	2.0	0.75
	15	1.125	0.438		15	2.125	1.0
	20	1.25	0.563		20	2.375	1.375
	25	1.375	0.688		*25	2.563	1.688
	30	1.438	0.813		*30	2.625	2.0
54	5	0.938	0.25	132	5	2.25	0.375
	10	1.063	0.313		10	2.313	0.75
	15	1.188	0.5		15	2.313	1.125
	20	1.313	0.625		20	2.563	1.5
	25	1.375	0.75		*25	2.75	1.875
	30	1.5	0.938		*30	2.875	2.25
60	5	1.063	0.25	144	5	2.5	0.438
	10	1.125	0.375		10	2.375	0.875
	15	1.25	0.5		15	2.438	1.25
	20	1.375	0.688		20	2.75	1.625
	*25	1.438	0.875		*25	2.875	2.0
	*30	1.563	1.0		*30	3.063	2.438

ASMENORMDOC.COM : Click to view the full PDF of ASME RTP-1 2019

Table NM2-3 Body Flange Design Using Full-Face Gaskets, Maximum Stress Less Than 1,800 psi — Type I Laminates (Cont'd)

GENERAL NOTES:

(a) Flange design based on the following criteria:

P = allowable pressure, psi
t = flange thickness, in.
g = thickness of hub at end of taper (pipe thickness), in. — Type II laminate properties
h = hub length, in. p $3t$
m = gasket factor (assumed m = 0.5)
Y = gasket unit seating load (assumed Y = 50 psi)
maximum flange and hub stress = 1,800 psi (based on use of mat reinforcement, Type I laminate)
maximum bolt stress = 18,800 psi (which is recommended for any low alloy carbon steel bolting or alloy bolting used)
maximum design temperature = 180°F

(b) This Table is referenced in Table NM2-1.

NOTE: (1) Sizes preceded by an asterisk should be used with SAE steel washers to minimize interference with the hub.

ASMENORMDOC.COM : Click to view the full PDF of ASME RTP-1 2019

Figure NM2-1 Design of Flat-Face Integral Body Flanges With Full-Face Gaskets

Design of Flat-Face Integral Body Flanges With Full-Face Gaskets						
Design Conditions				Bolting Calculations		
Design pressure, P =			psi	Lever arms	$h_G = \frac{C-B}{4}$ = in.	$h'_G = \frac{A-C}{4}$ = in.
Design temperature, T =			°F			
Atmos. temperature, T =			°F	$G = C - 2h_G$ = in.	$b = 0.25(C - B)$ = in.	
Flange material:				$H'_{gy} = (h_G/h'_G)\ (b\pi Gy)$ =		lb
Bolting material:				$Wm_2 = b\pi Gy + H'_{gy}$ =		lb
Gasket material:				$H_p = 2b\pi GmP$ =		lb
Allowable Stresses	Flange	Design temp.	S_{fo} = psi	$H'_p = H_p\ (h_G/h'_G)$ =		lb
	Bolting	Design temp.	S_b = psi	$H = 0.7854G^2P$ =		lb
		Atmos. temp.	S_a = psi	$Wm_1 = H + H_p + H'_p$ =		lb
Gasket Factors				A_m = greater of $\frac{Wm_2}{S_a}$ or $\frac{Wm_1}{S_b}$ =		in.^{2}
y = psi		m =		A_B =		in.^{2}
				$W = 0.5(A_m + A_B)S_a$ =		lb

Flange Loads	Lever Arms	Flange Moments (Design Cond.)
$H_D = 0.7854B^2P$ = lb	$h_D = R + 0.5g_1$ = in.	$M_D = H_Dh_D$ = in.-lb
$H_T = H - H_D$ = lb	$h_T = 0.5(R + g_1 + h_G)$ = in.	$M_T = H_Th_T$ = in.-lb
		$M_O = M_D + M_T$ = in.-lb
Reverse moment: $H_G = W - H$ = lb	$h''_G = \frac{h_Gh'_G}{h_G + h'_G}$ = in.	$M_G = H_Gh''_G$ = in.-lb

Allowable Stress	Stress Calculations	Shape Constants
S_{fo} =	Long hub $S_H = fM/Lg_1^2$ = psi	$K = A/B$ =
S_{fo} =	Radial flg. $S_R = N_1M/Lt^2$ = psi	T = ; Z = ; Y = ; U =
S_{fo} =	Tang. flg. $S_T = (YM/t^2) - ZS_R$ = psi	g_1/g_0 =
S_{fo} =	Greater of $0.5(S_H + S_R)$ or $0.5(S_H + S_T)$ = psi	$h_0 = (Bg_0)^{1/2}$ = ; h/h_0 =
S_{fo} =	Radial stress at bolt circle $S_{RAD} = \frac{6M_G}{t^2(\pi C - nd_1)}$ = psi	F = ; V = ; f = (1 min.)

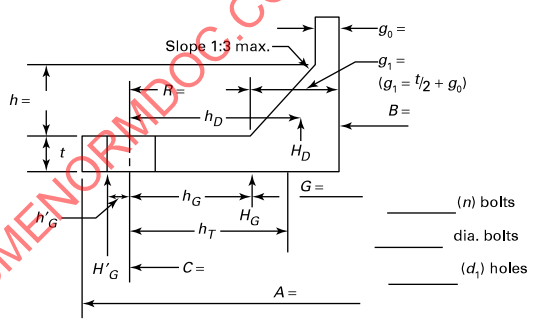

$e = F/h_0$ =

$d = \frac{U}{V} h_0g_0^2$ =

$M = M_O/B$ =

Approximation of required thickness

$t = 0.29\left(\frac{MY}{S_{fo}}\right)^{1/2}$

= in.

$N_1 = \frac{4}{3}te + 1$ =

$L = \frac{te + 1}{T} + \frac{t^3}{d}$ =

GENERAL NOTE: This form may be reproduced and used without written permission from ASME if used for purposes other than republication.

ASMENORMDOC.COM : Click to view the full PDF of ASME RTP-1 2019

Figure NM2-2 Values of *F* (Integral Flange Factors)

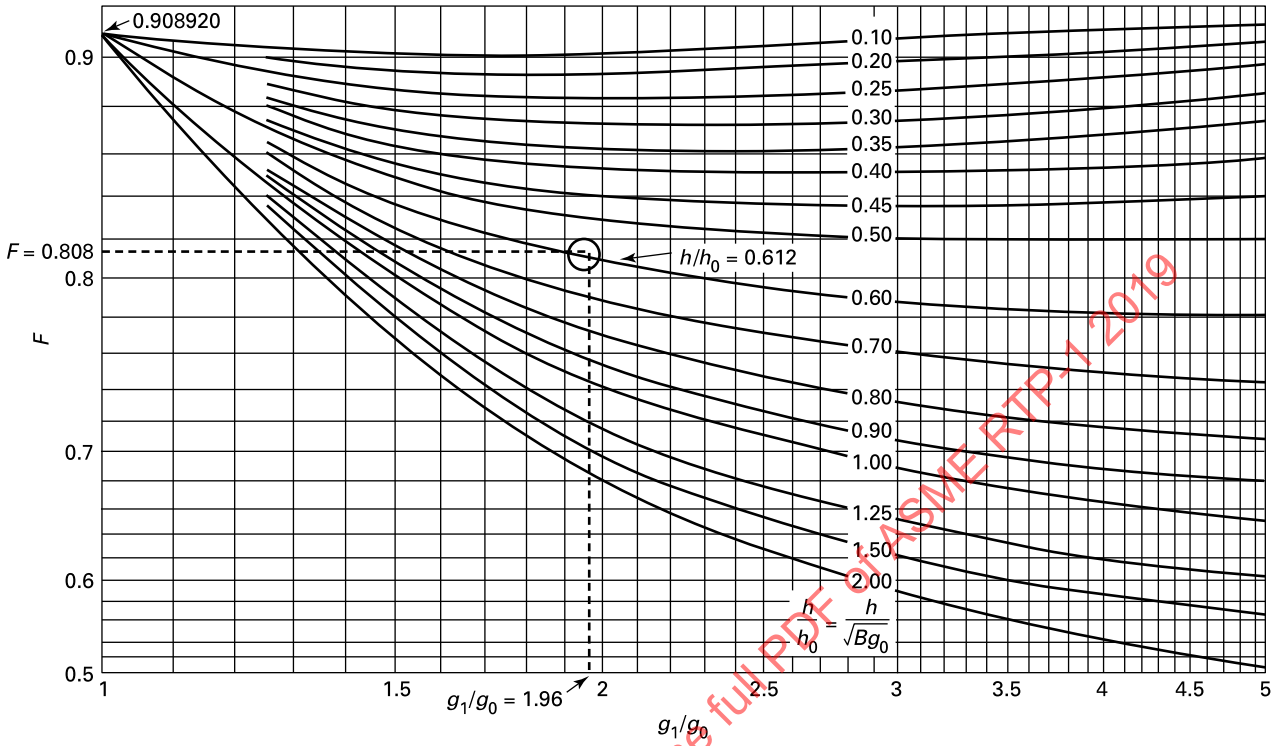

ASMENORMDOC.COM : Click to view the full PDF of ASME RTP-1 2019

Figure NM2-3 Values of *f* (Hub Stress Correction Factors)

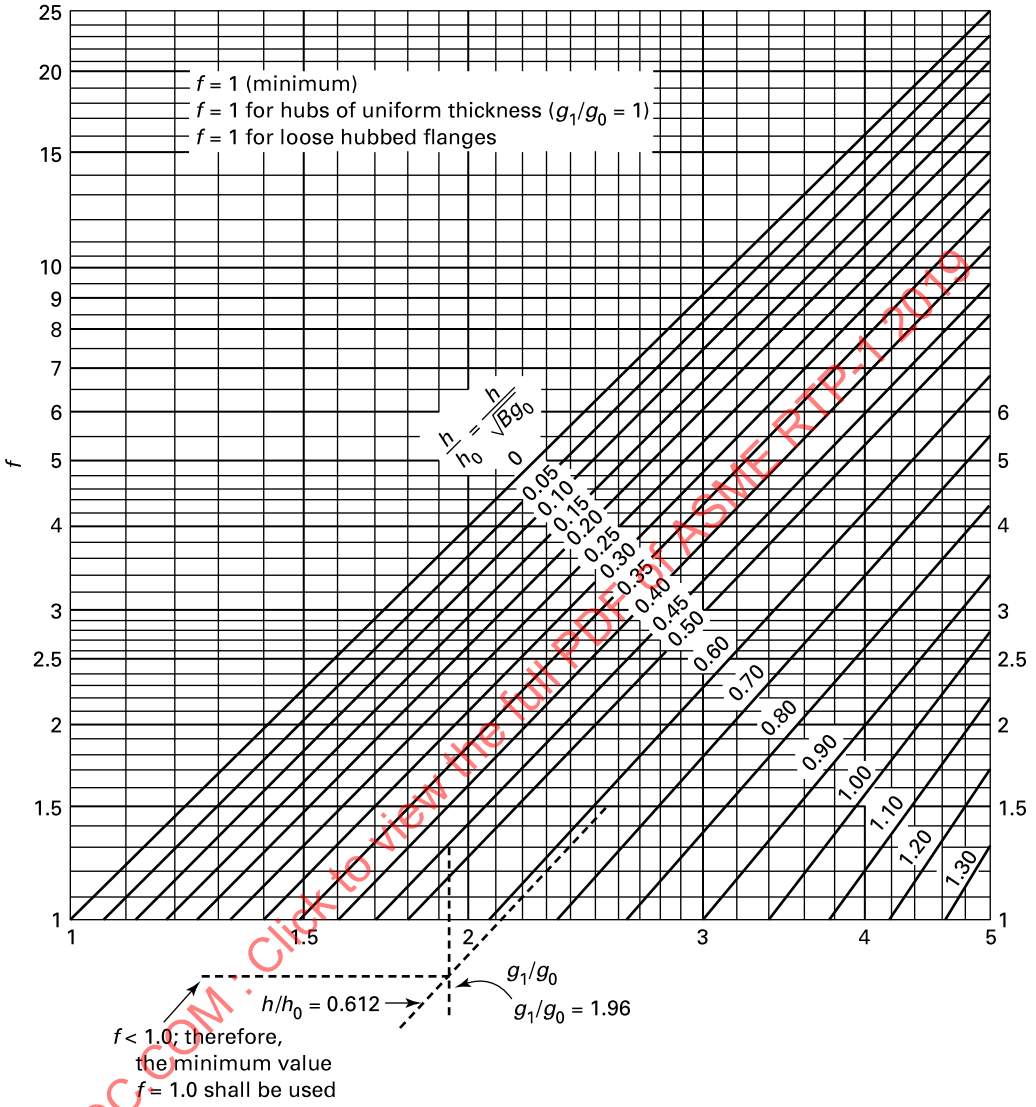

ASMENORMDOC.COM : Click to view the full PDF of ASME RTP-1 2019

Figure NM2-4 Values of *T*, *U*, *Y*, and *Z* (Terms Involving *K*)

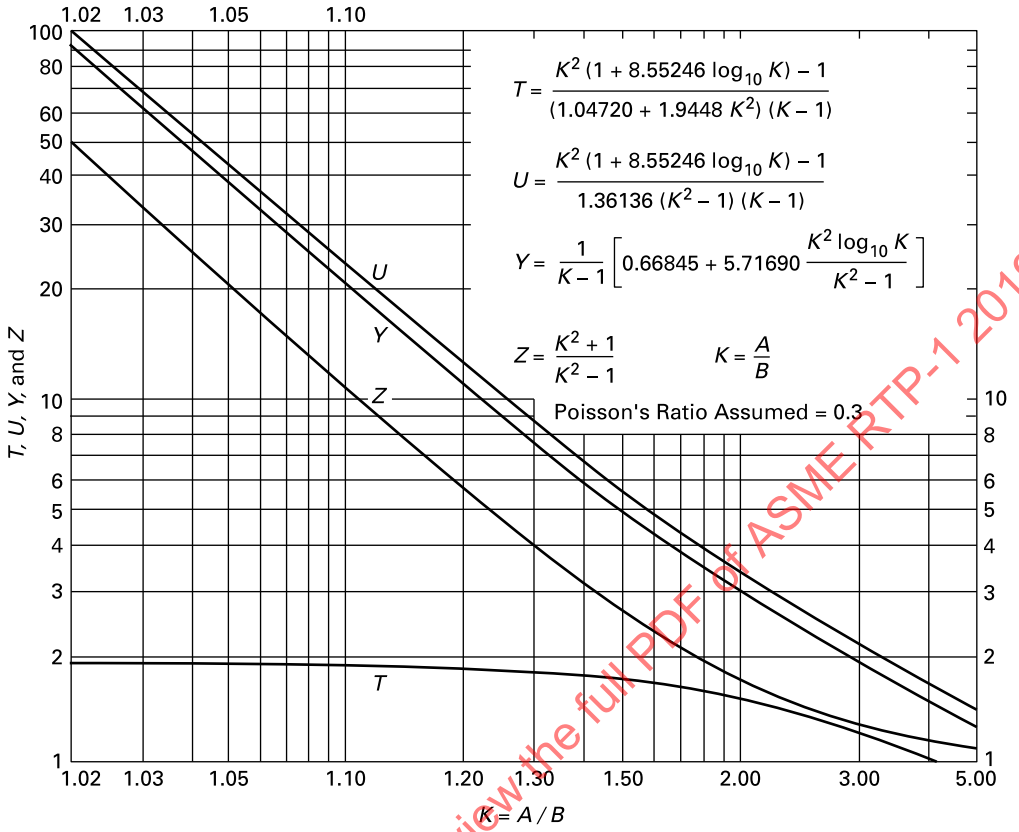

ASMENORMDOC.COM : Click to view the full PDF of ASME RTP-1 2019

Figure NM2-5 Values of *V* (Integral Flange Factors)

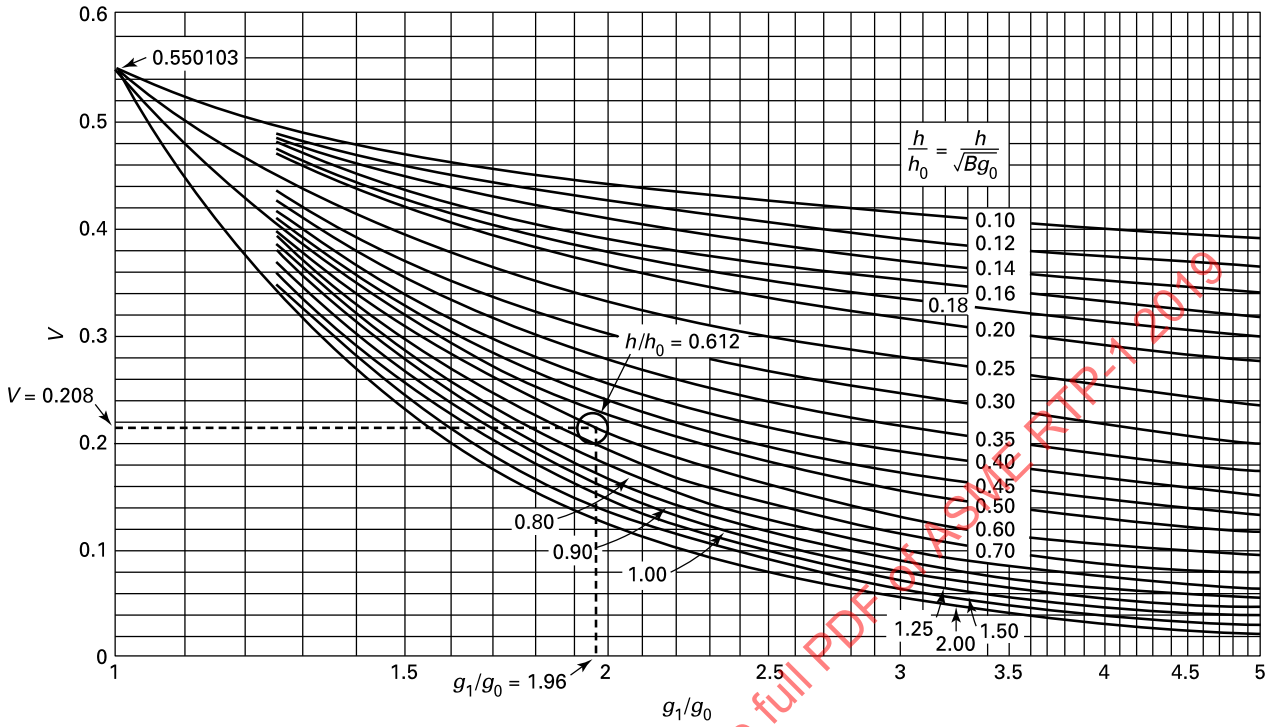

ASMENORMDOC.COM : Click to view the full PDF of ASME RTP-1 2019

Figure NM2-6 Design of Flat-Face Integral Body Flanges With Full-Face Gaskets (Example Calculation — 72-in. Flange at 30 psi)

Design of Flat-Face Integral Body Flanges With Full-Face Gaskets						
Design Conditions					**Bolting Calculations**	
Design pressure, $P = 30$				psi	Lever arms	$h_G = \frac{C-B}{4} = \frac{77-72}{4} = 1.25$ in. $\quad h'_G = \frac{A-C}{4} = \frac{78.5-77}{4} = 0.375$ in.
Design temperature, $T = 180$				°F		
Atmos. temperature, $T = 70$				°F	$G = C - 2h_G = 77 - (2)(1.25) = 74.5$ in.	$b = 0.25(C - B) = 1.25$ in.
Flange material: RTP					$H'_{gy} = (h_G/h'_G)(b\pi Gy) = (1.25/0.375)(1.25)\pi(74.5)(50) = 48{,}760$	lb
Bolting material: C.S. (193-B7)					$Wm_2 = b\pi Gy + H'_{gy} = (1.25)\pi(74.5)(50) + 48{,}760 = 63{,}388$	lb
Gasket material: Neoprene					$H_p = 2b\pi GmP = (2)(1.25)\pi(74.5)(0.5)(30) = 8{,}777$	lb
Allowable Stresses	Flange	Design temp.	$S_{fo} = 3{,}000$	psi	$H'_p = H_p(h_G/h'_G) = 8{,}777(1.25/0.375) = 29{,}257$	lb
	Bolting	Design temp.	$S_b = 25{,}000$	psi	$H = 0.7854G^2P = 0.7854(74.5)^2(30) = 130{,}775$	lb
		Atmos. temp.	$S_a = 25{,}000$	psi	$Wm_1 = H + H_p + H'_p = 130{,}775 + 8{,}777 + 29{,}257 = 168{,}809$	lb
Gasket Factors					$A_m =$ greater of $\frac{Wm_2}{S_a}$ or $\frac{Wm_1}{S_b} = \frac{168{,}809}{25{,}000} = 6.752$	in.^{2}
$y = 50$ psi		$m = 0.5$			$A_B = (64)\ ^1/_2$ in. dia. bolts $= (64)(0.126) = 8.064$	in.^{2}
					$W = 0.5(A_m + A_B)S_a = 0.5(6.752 + 8.064)(25{,}000) = 185{,}200$	lb

Flange Loads		Lever Arms		Flange Moments (Design Cond.)	
$H_D = 0.7854B^2P = 122{,}145$	lb	$h_D = R + 0.5g_1 = 1.7655$	in.	$M_D = H_Dh_D = 215{,}647$	in.-lb
$H_T = H - H_D = 8{,}630$	lb	$h_T = 0.5(R + g_1 + h_G) = 1.875$	in.	$M_T = H_Th_T = 16{,}181$	in.-lb
				$M_O = M_D + M_T = 231{,}828$	in.-lb
Reverse moment	$H_G = W - H = 54{,}425$ lb	$h''_G = \frac{h_Gh'_G}{h_G + h'_G} = 0.2885$	in.	$M_G = H_Gh''_G = 15{,}702$	in.-lb

Allowable Stress	Stress Calculations		Shape Constants
$S_{fo} = 3{,}000$	Long hub $S_H = fM/Lg_1^2 =$	2,399 psi	$K = A/B = 78.5/72 = 1.0902$
$S_{fo} = 3{,}000$	Radial flg. $S_R = N_1M/Lt^2 =$	3,031 psi	$T = 1.88$ $\quad Z = 11.63$ $\quad Y = 22.44$ $\quad U = 24.66$
$S_{fo} = 3{,}000$	Tang. flg. $S_T = (YM/t^2) - ZS_R =$	−283 psi	$g_1/g_0 = 1.469/0.75 = 1.959$
$S_{fo} = 3{,}000$	Greater of $0.5(S_H + S_R)$ or $0.5(S_H + S_T) =$	2,715 psi	$h_0 = (Bg_0)^{1/2} = [(72)(0.75)]^{1/2} = 7.348$ $h/h_0 = 4.5/7.348 = 0.6124$
$S_{fo} = 3{,}000$	Radial stress at bolt circle $S_{RAD} = \frac{6M_G}{t^2(\pi C - nd_1)} =$	225 psi	$F = 0.808$ $V = 0.208$ $f = 1.0$ (1 min.)

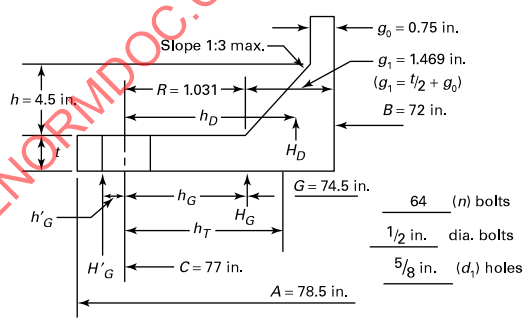

$e = F/h_0 = 0.808/7.348 = 0.110$

$d = \frac{U}{V}h_0g_0^2 = (24.66/0.208)(7.348)(0.75)^2 = 490$

$M = M_O/B = 231{,}828/72 = 3{,}220$

Approximation of required thickness

$$t = 0.29\left(\frac{MY}{S_{fo}}\right)^{1/2}$$

$$= 0.29 \times \left[\frac{(3{,}220)(22.44)}{3{,}000}\right]^{1/2} = 1.43 \text{ in.}$$

$N_1 = {}^4/_3\, te + 1 = (1.33)(1.43)(0.110) + 1 = 1.21$

$$L = \frac{te+1}{T} + \frac{t^3}{d} = \frac{(1.43)(0.110) + 1}{1.88} + \frac{(1.43)^3}{490} = 0.622$$

ASMENORMDOC.COM : Click to view the full PDF of ASME RTP-1 2019

Table NM2-4 Values of *T*, *Z*, *Y*, and *U* (Factors Involving *K*)

K	*T*	*Z*	*Y*	*U*	*K*	*T*	*Z*	*Y*	*U*	*K*	*T*	*Z*	*Y*	*U*
1.001	1.91	1000.50	1899.43	2078.85	1.046	1.90	22.05	42.75	46.99	1.091	1.88	11.52	22.22	24.41
1.002	1.91	500.50	951.81	1052.80	1.047	1.90	21.79	41.87	46.03	1.092	1.88	11.40	21.99	24.16
1.003	1.91	333.83	637.56	700.70	1.048	1.90	21.35	41.02	45.09	1.093	1.88	11.28	21.76	23.91
1.004	1.91	250.50	478.04	525.45	1.049	1.90	20.92	40.21	44.21	1.094	1.88	11.16	21.54	23.67
1.005	1.91	200.50	383.67	421.72	1.050	1.89	20.51	39.43	43.34	1.095	1.88	11.05	21.32	23.44
1.006	1.91	167.17	319.71	351.42	1.051	1.89	20.12	38.68	42.51	1.096	1.88	10.94	21.11	23.20
1.007	1.91	143.36	274.11	301.30	1.052	1.89	19.74	37.96	41.73	1.097	1.88	10.83	20.91	22.97
1.008	1.91	125.50	239.95	263.75	1.053	1.89	19.38	37.27	40.96	1.098	1.88	10.73	20.71	22.75
1.009	1.91	111.61	213.42	234.42	1.054	1.89	19.03	36.60	40.23	1.099	1.88	10.62	20.51	22.39
1.010	1.91	100.50	192.19	211.19	1.055	1.89	18.69	35.96	39.64	1.100	1.88	10.52	20.31	22.18
1.011	1.91	91.41	174.83	192.13	1.056	1.89	18.38	35.34	38.84	1.101	1.88	10.43	20.15	22.12
1.012	1.91	83.84	160.38	176.25	1.057	1.89	18.06	34.74	38.19	1.102	1.88	10.33	19.94	21.92
1.013	1.91	77.43	148.06	162.81	1.058	1.89	17.76	34.17	37.56	1.103	1.88	10.23	19.76	21.72
1.014	1.91	71.93	137.69	151.30	1.059	1.89	17.47	33.62	36.95	1.104	1.88	10.14	19.58	21.52
1.015	1.91	67.17	128.61	141.33	1.060	1.89	17.18	33.04	36.34	1.105	1.88	10.05	19.38	21.30
1.016	1.90	63.00	120.56	132.49	1.061	1.89	16.91	32.55	35.78	1.106	1.88	9.96	19.33	21.14
1.017	1.90	59.33	111.98	124.81	1.062	1.89	16.64	32.04	35.21	1.107	1.87	9.87	19.07	20.95
1.018	1.90	56.06	107.36	118.00	1.063	1.89	16.40	31.55	34.68	1.108	1.87	9.78	18.90	20.77
1.019	1.90	53.14	101.72	111.78	1.064	1.89	16.15	31.08	34.17	1.109	1.87	9.70	18.74	20.59
1.020	1.90	50.51	96.73	106.30	1.065	1.89	15.90	30.61	33.65	1.110	1.87	9.62	18.55	20.38
1.021	1.90	48.12	92.21	101.33	1.066	1.89	15.67	30.17	33.17	1.111	1.87	9.54	18.42	20.25
1.022	1.90	45.96	88.04	96.75	1.067	1.89	15.45	29.74	32.69	1.112	1.87	9.46	18.27	20.08
1.023	1.90	43.98	84.30	92.64	1.068	1.89	15.22	29.32	32.22	1.113	1.87	9.38	18.13	19.91
1.024	1.90	42.17	80.81	88.81	1.069	1.89	15.02	28.91	31.79	1.114	1.87	9.30	17.97	19.75
1.025	1.90	40.51	77.61	85.29	1.070	1.89	14.80	28.51	31.34	1.115	1.87	9.22	17.81	19.55
1.026	1.90	38.97	74.70	82.09	1.071	1.89	14.61	28.13	30.92	1.116	1.87	9.15	17.68	19.43
1.027	1.90	37.54	71.97	79.08	1.072	1.89	14.41	27.76	30.51	1.117	1.87	9.07	17.54	19.27
1.028	1.90	36.22	69.43	76.30	1.073	1.89	14.22	27.39	30.11	1.118	1.87	9.00	17.40	19.12
1.029	1.90	34.99	67.11	73.75	1.074	1.88	14.04	27.04	29.72	1.119	1.87	8.94	17.27	18.98
1.030	1.90	33.84	64.91	71.33	1.075	1.88	13.85	26.69	29.34	1.120	1.87	8.86	17.13	18.80
1.031	1.90	32.76	62.85	69.06	1.076	1.88	13.68	26.36	28.98	1.121	1.87	8.79	17.00	18.68
1.032	1.90	31.76	60.92	66.94	1.077	1.88	13.56	26.03	28.69	1.122	1.87	8.72	16.87	18.54
1.033	1.90	30.81	59.11	63.95	1.078	1.88	13.35	25.72	28.27	1.123	1.87	8.66	16.74	18.40
1.034	1.90	29.92	57.41	63.08	1.079	1.88	13.18	25.40	27.92	1.124	1.87	8.59	16.62	18.26
1.035	1.90	29.08	55.80	61.32	1.080	1.88	13.02	25.10	27.59	1.125	1.87	8.53	16.49	18.11
1.036	1.90	28.29	54.29	59.66	1.081	1.88	12.87	24.81	27.27	1.126	1.87	8.47	16.37	17.99
1.037	1.90	27.54	52.85	58.08	1.082	1.88	12.72	24.52	26.95	1.127	1.87	8.40	16.25	17.86
1.038	1.90	26.83	51.50	56.59	1.083	1.88	12.57	24.24	26.65	1.128	1.87	8.34	16.14	17.73
1.039	1.90	26.15	50.21	55.17	1.084	1.88	12.43	24.00	26.34	1.129	1.87	8.28	16.02	17.60
1.040	1.90	25.51	48.97	53.82	1.085	1.88	12.29	23.69	26.05	1.130	1.87	8.22	15.91	17.48
1.041	1.90	24.90	47.81	53.10	1.086	1.88	12.15	23.44	25.57	1.131	1.87	8.16	15.79	17.35
1.042	1.90	24.32	46.71	51.33	1.087	1.88	12.02	23.18	25.48	1.132	1.87	8.11	15.68	17.24
1.043	1.90	23.77	45.64	50.15	1.088	1.88	11.89	22.93	25.20	1.133	1.86	8.05	15.57	17.11
1.044	1.90	23.23	44.64	49.05	1.089	1.88	11.76	22.68	24.93	1.134	1.86	7.99	15.46	16.99
1.045	1.90	22.74	43.69	48.02	1.090	1.88	11.63	22.44	24.66	1.135	1.86	7.94	15.36	16.90

ASMENORMDOC.COM : Click to view the full PDF of ASME RTP-1 2019

Table NM2-4 Values of *T*, *Z*, *Y*, and *U* (Factors Involving *K*) (Cont'd)

K	*T*	*Z*	*Y*	*U*	*K*	*T*	*Z*	*Y*	*U*	*K*	*T*	*Z*	*Y*	*U*
1.136	1.86	7.88	15.26	16.77	1.181	1.85	6.07	11.76	12.92	1.226	1.83	4.98	9.65	10.60
1.137	1.86	7.83	15.15	16.66	1.182	1.85	6.04	11.70	12.86	1.227	1.83	4.96	9.61	10.56
1.138	1.86	7.78	15.05	16.54	1.183	1.85	6.01	11.64	12.79	1.228	1.83	4.94	9.57	10.52
1.139	1.86	7.73	14.95	16.43	1.184	1.85	5.98	11.58	12.73	1.229	1.83	4.92	9.53	10.48
1.140	1.86	7.68	14.86	16.35	1.185	1.85	5.95	11.50	12.64	1.230	1.83	4.90	9.50	10.44
1.141	1.86	7.62	14.76	16.22	1.186	1.85	5.92	11.47	12.61	1.231	1.83	4.88	9.46	10.40
1.142	1.86	7.57	14.66	16.11	1.187	1.85	5.89	11.42	12.54	1.232	1.83	4.86	9.43	10.36
1.143	1.86	7.53	14.57	16.01	1.188	1.85	5.86	11.36	12.49	1.233	1.83	4.84	9.39	10.32
1.144	1.86	7.48	14.48	15.91	1.189	1.85	5.83	11.31	12.43	1.234	1.83	4.83	9.36	10.28
1.145	1.86	7.43	14.39	15.83	1.190	1.84	5.81	11.26	12.37	1.235	1.83	4.81	9.32	10.24
1.146	1.86	7.38	14.29	15.71	1.191	1.84	5.78	11.20	12.31	1.236	1.82	4.79	9.29	10.20
1.147	1.86	7.34	14.20	15.61	1.192	1.84	5.75	11.15	12.25	1.237	1.82	4.77	9.25	10.17
1.148	1.86	7.29	14.12	15.51	1.193	1.84	5.73	11.10	12.20	1.238	1.82	4.76	9.22	10.13
1.149	1.86	7.25	14.03	15.42	1.194	1.84	5.70	11.05	12.14	1.239	1.82	4.74	9.18	10.09
1.150	1.86	7.20	13.95	15.34	1.195	1.84	5.67	11.00	12.08	1.240	1.82	4.72	9.15	10.05
1.151	1.86	7.16	13.86	15.23	1.196	1.84	5.65	10.95	12.03	1.241	1.82	4.70	9.12	10.02
1.152	1.86	7.11	13.77	15.14	1.197	1.84	5.62	10.90	11.97	1.242	1.82	4.69	9.08	9.98
1.153	1.86	7.07	13.69	15.05	1.198	1.84	5.60	10.85	11.92	1.243	1.82	4.67	9.05	9.95
1.154	1.86	7.03	13.61	14.96	1.199	1.84	5.57	10.80	11.87	1.244	1.82	4.65	9.02	9.91
1.155	1.86	6.99	13.54	14.87	1.200	1.84	5.55	10.75	11.81	1.245	1.82	4.64	8.99	9.87
1.156	1.86	6.95	13.45	14.78	1.201	1.84	5.52	10.70	11.76	1.246	1.82	4.62	8.95	9.84
1.157	1.86	6.91	13.37	14.70	1.202	1.84	5.50	10.65	11.71	1.247	1.82	4.60	8.92	9.81
1.158	1.86	6.87	13.30	14.61	1.203	1.84	5.47	10.61	11.66	1.248	1.82	4.59	8.89	9.77
1.159	1.86	6.83	13.22	14.53	1.204	1.84	5.45	10.56	11.61	1.249	1.82	4.57	8.86	9.74
1.160	1.86	6.79	13.15	14.45	1.205	1.84	5.42	10.52	11.56	1.250	1.82	4.56	8.83	9.70
1.161	1.85	6.75	13.07	14.36	1.206	1.84	5.40	10.47	11.51	1.251	1.82	4.54	8.80	9.67
1.162	1.85	6.71	13.00	14.28	1.207	1.84	5.38	10.43	11.46	1.252	1.82	4.52	8.77	9.64
1.163	1.85	6.67	12.92	14.20	1.208	1.84	5.35	10.38	11.41	1.253	1.82	4.51	8.74	9.60
1.164	1.85	6.64	12.85	14.12	1.209	1.84	5.33	10.34	11.36	1.254	1.82	4.49	8.71	9.57
1.165	1.85	6.60	12.78	14.04	1.210	1.84	5.31	10.30	11.32	1.255	1.82	4.48	8.68	9.54
1.166	1.85	6.56	12.71	13.97	1.211	1.83	5.29	10.25	11.27	1.256	1.82	4.46	8.65	9.51
1.167	1.85	6.53	12.64	13.89	1.212	1.83	5.27	10.21	11.22	1.257	1.82	4.45	8.62	9.47
1.168	1.85	6.49	12.58	13.82	1.213	1.83	5.24	10.16	11.17	1.258	1.81	4.43	8.59	9.44
1.169	1.85	6.46	12.51	13.74	1.214	1.83	5.22	10.12	11.12	1.259	1.81	4.42	8.56	9.41
1.170	1.85	6.42	12.43	13.66	1.215	1.83	5.20	10.09	11.09	1.260	1.81	4.40	8.53	9.38
1.171	1.85	6.39	12.38	13.60	1.216	1.83	5.18	10.04	11.03	1.261	1.81	4.39	8.51	9.35
1.172	1.85	6.35	12.31	13.53	1.217	1.83	5.16	10.00	10.99	1.262	1.81	4.37	8.49	9.32
1.173	1.85	6.32	12.25	13.46	1.218	1.83	5.14	9.96	10.94	1.263	1.81	4.36	8.45	9.28
1.174	1.85	6.29	12.18	13.39	1.219	1.83	5.12	9.92	10.90	1.264	1.81	4.35	8.42	9.25
1.175	1.85	6.25	12.10	13.30	1.220	1.83	5.10	9.89	10.87	1.265	1.81	4.33	8.39	9.23
1.176	1.85	6.22	12.06	13.25	1.221	1.83	5.07	9.84	10.81	1.266	1.81	4.32	8.37	9.19
1.177	1.85	6.19	12.00	13.18	1.222	1.83	5.05	9.80	10.77	1.267	1.81	4.30	8.34	9.16
1.178	1.85	6.16	11.93	13.11	1.223	1.83	5.03	9.76	10.73	1.268	1.81	4.29	8.31	9.14
1.179	1.85	6.13	11.87	13.05	1.224	1.83	5.01	9.72	10.68	1.269	1.81	4.28	8.29	9.11
1.180	1.85	6.10	11.79	12.96	1.225	1.83	5.00	9.69	10.65	1.270	1.81	4.26	8.26	9.08

ASMENORMDOC.COM : Click to view the full PDF of ASME RTP-1 2019

Table NM2-4 Values of *T*, *Z*, *Y*, and *U* (Factors Involving *K*) (Cont'd)

K	*T*	*Z*	*Y*	*U*	*K*	*T*	*Z*	*Y*	*U*	*K*	*T*	*Z*	*Y*	*U*
1.271	1.81	4.25	8.23	9.05	1.316	1.79	3.73	7.22	7.94	1.361	1.77	3.35	6.45	7.09
1.272	1.81	4.24	8.21	9.02	1.317	1.79	3.72	7.20	7.92	1.362	1.77	3.34	6.44	7.08
1.273	1.81	4.22	8.18	8.99	1.318	1.79	3.71	7.18	7.89	1.363	1.77	3.33	6.42	7.06
1.274	1.81	4.21	8.15	8.96	1.319	1.79	3.70	7.16	7.87	1.364	1.77	3.32	6.41	7.04
1.275	1.81	4.20	8.13	8.93	1.320	1.79	3.69	7.14	7.85	1.365	1.77	3.32	6.39	7.03
1.276	1.81	4.18	8.11	8.91	1.321	1.79	3.68	7.12	7.83	1.366	1.77	3.31	6.38	7.01
1.277	1.81	4.17	8.08	8.88	1.322	1.79	3.67	7.10	7.81	1.367	1.77	3.30	6.37	7.00
1.278	1.81	4.16	8.05	8.85	1.323	1.79	3.67	7.09	7.79	1.368	1.77	3.30	6.35	6.98
1.279	1.81	4.15	8.03	8.82	1.324	1.79	3.66	7.07	7.77	1.369	1.77	3.29	6.34	6.97
1.280	1.81	4.13	8.01	8.79	1.325	1.79	3.65	7.05	7.75	1.370	1.77	3.28	6.32	6.95
1.281	1.81	4.12	7.98	8.77	1.326	1.79	3.64	7.03	7.73	1.371	1.77	3.27	6.31	6.93
1.282	1.81	4.11	7.96	8.74	1.327	1.79	3.63	7.01	7.71	1.372	1.77	3.27	6.30	6.91
1.283	1.80	4.10	7.93	8.71	1.328	1.78	3.62	7.00	7.69	1.373	1.77	3.26	6.28	6.90
1.284	1.80	4.08	7.91	8.69	1.329	1.78	3.61	6.98	7.67	1.374	1.77	3.25	6.27	6.89
1.285	1.80	4.07	7.89	8.66	1.330	1.78	3.60	6.96	7.65	1.375	1.77	3.25	6.25	6.87
1.286	1.80	4.06	7.86	8.64	1.331	1.78	3.59	6.94	7.63	1.376	1.77	3.24	6.24	6.86
1.287	1.80	4.05	7.84	8.61	1.332	1.78	3.58	6.92	7.61	1.377	1.77	3.23	6.22	6.84
1.288	1.80	4.04	7.81	8.59	1.333	1.78	3.57	6.91	7.59	1.378	1.76	3.22	6.21	6.82
1.289	1.80	4.02	7.79	8.56	1.334	1.78	3.57	6.89	7.57	1.379	1.76	3.22	6.19	6.81
1.290	1.80	4.01	7.77	8.53	1.335	1.78	3.56	6.87	7.55	1.380	1.76	3.21	6.18	6.80
1.291	1.80	4.00	7.75	8.51	1.336	1.78	3.55	6.85	7.53	1.381	1.76	3.20	6.17	6.79
1.292	1.80	3.99	7.72	8.48	1.337	1.78	3.54	6.84	7.51	1.382	1.76	3.20	6.16	6.77
1.293	1.80	3.98	7.70	8.46	1.338	1.78	3.53	6.82	7.50	1.383	1.76	3.19	6.14	6.75
1.294	1.80	3.97	7.68	8.43	1.339	1.78	3.52	6.81	7.48	1.384	1.76	3.18	6.13	6.74
1.295	1.80	3.95	7.66	8.41	1.340	1.78	3.51	6.79	7.46	1.385	1.76	3.18	6.12	6.73
1.296	1.80	3.94	7.63	8.39	1.341	1.78	3.51	6.77	7.44	1.386	1.76	3.17	6.11	6.72
1.297	1.80	3.93	7.61	8.36	1.342	1.78	3.50	6.76	7.42	1.387	1.76	3.16	6.10	6.70
1.298	1.80	3.92	7.59	8.33	1.343	1.78	3.49	6.74	7.41	1.388	1.76	3.16	6.08	6.68
1.299	1.80	3.91	7.57	8.31	1.344	1.78	3.48	6.72	7.39	1.389	1.76	3.15	6.07	6.67
1.300	1.80	3.90	7.55	8.29	1.345	1.78	3.47	6.71	7.37	1.390	1.76	3.15	6.06	6.66
1.301	1.80	3.89	7.53	8.27	1.346	1.78	3.46	6.69	7.35	1.391	1.76	3.14	6.05	6.64
1.302	1.80	3.88	7.50	8.24	1.347	1.78	3.46	6.68	7.33	1.392	1.76	3.13	6.04	6.63
1.303	1.80	3.87	7.48	8.22	1.348	1.78	3.45	6.66	7.32	1.393	1.76	3.13	6.02	6.61
1.304	1.80	3.86	7.46	8.20	1.349	1.78	3.44	6.65	7.30	1.394	1.76	3.12	6.01	6.60
1.305	1.80	3.84	7.44	8.18	1.350	1.78	3.43	6.63	7.28	1.395	1.76	3.11	6.00	6.59
1.306	1.80	3.83	7.42	8.16	1.351	1.78	3.42	6.61	7.27	1.396	1.76	3.11	5.99	6.58
1.307	1.80	3.82	7.40	8.13	1.352	1.78	3.42	6.60	7.25	1.397	1.76	3.10	5.98	6.56
1.308	1.79	3.81	7.38	8.11	1.353	1.77	3.41	6.58	7.23	1.398	1.75	3.10	5.96	6.55
1.309	1.79	3.80	7.36	8.09	1.354	1.77	3.40	6.57	7.21	1.399	1.75	3.09	5.95	6.53
1.310	1.79	3.79	7.34	8.07	1.355	1.77	3.39	6.55	7.19	1.400	1.75	3.08	5.94	6.52
1.311	1.79	3.78	7.32	8.05	1.356	1.77	3.38	6.53	7.17	1.401	1.75	3.08	5.93	6.50
1.312	1.79	3.77	7.30	8.02	1.357	1.77	3.38	6.52	7.16	1.402	1.75	3.07	5.92	6.49
1.313	1.79	3.76	7.28	8.00	1.358	1.77	3.37	6.50	7.14	1.403	1.75	3.07	5.90	6.47
1.314	1.79	3.75	7.26	7.98	1.359	1.77	3.36	6.49	7.12	1.404	1.75	3.06	5.89	6.46
1.315	1.79	3.74	7.24	7.96	1.360	1.77	3.35	6.47	7.11	1.405	1.75	3.05	5.88	6.45

ASMENORMDOC.COM : Click to view the full PDF of ASME RTP-1 2019

Table NM2-4 Values of *T*, *Z*, *Y*, and *U* (Factors Involving *K*) (Cont'd)

K	*T*	*Z*	*Y*	*U*	*K*	*T*	*Z*	*Y*	*U*	*K*	*T*	*Z*	*Y*	*U*
1.406	1.75	3.05	5.87	6.44	1.451	1.73	2.81	5.39	5.92	1.496	1.71	2.62	4.99	5.48
1.407	1.75	3.04	5.86	6.43	1.452	1.73	2.80	5.38	5.91	1.497	1.71	2.61	4.98	5.47
1.408	1.75	3.04	5.84	6.41	1.453	1.73	2.80	5.37	5.90	1.498	1.71	2.61	4.98	5.47
1.409	1.75	3.03	5.83	6.40	1.454	1.73	2.80	5.36	5.89	1.499	1.71	2.60	4.97	5.46
1.410	1.75	3.02	5.82	6.39	1.455	1.73	2.79	5.35	5.88	1.500	1.71	2.60	4.96	5.45
1.411	1.75	3.02	5.81	6.38	1.456	1.73	2.79	5.34	5.87	1.501	1.71	2.60	4.95	5.44
1.412	1.75	3.01	5.80	6.37	1.457	1.73	2.78	5.33	5.86	1.502	1.71	2.59	4.94	5.43
1.413	1.75	3.01	5.78	6.35	1.458	1.73	2.78	5.32	5.85	1.503	1.71	2.59	4.94	5.43
1.414	1.75	3.00	5.77	6.34	1.459	1.73	2.77	5.31	5.84	1.504	1.71	2.58	4.93	5.42
1.415	1.75	3.00	5.76	6.33	1.460	1.73	2.77	5.30	5.83	1.505	1.71	2.58	4.92	5.41
1.416	1.75	2.99	5.75	6.32	1.461	1.73	2.76	5.29	5.82	1.506	1.71	2.58	4.91	5.40
1.417	1.75	2.98	5.74	6.31	1.462	1.73	2.76	5.28	5.80	1.507	1.71	2.57	4.90	5.39
1.418	1.75	2.98	5.72	6.29	1.463	1.73	2.75	5.27	5.79	1.508	1.71	2.57	4.90	5.39
1.419	1.75	2.97	5.71	6.28	1.464	1.73	2.75	5.26	5.78	1.509	1.71	2.57	4.89	5.38
1.420	1.75	2.97	5.70	6.27	1.465	1.73	2.74	5.25	5.77	1.510	1.71	2.56	4.88	5.37
1.421	1.75	2.96	5.69	6.26	1.466	1.73	2.74	5.24	5.76	1.511	1.71	2.56	4.87	5.36
1.422	1.75	2.96	5.68	6.25	1.467	1.73	2.74	5.23	5.74	1.512	1.71	2.56	4.86	5.35
1.423	1.75	2.95	5.67	6.23	1.468	1.72	2.73	5.22	5.73	1.513	1.71	2.55	4.86	5.35
1.424	1.74	2.95	5.66	6.22	1.469	1.72	2.73	5.21	5.72	1.514	1.71	2.55	4.85	5.34
1.425	1.74	2.94	5.65	6.21	1.470	1.72	2.72	5.20	5.71	1.515	1.71	2.54	4.84	5.33
1.426	1.74	2.94	5.64	6.20	1.471	1.72	2.72	5.19	5.70	1.516	1.71	2.54	4.83	5.32
1.427	1.74	2.93	5.63	6.19	1.472	1.72	2.71	5.18	5.69	1.517	1.71	2.54	4.82	5.31
1.428	1.74	2.92	5.62	6.17	1.473	1.72	2.71	5.18	5.68	1.518	1.71	2.53	4.82	5.31
1.429	1.74	2.92	5.61	6.16	1.474	1.72	2.71	5.17	5.67	1.519	1.70	2.53	4.81	5.30
1.430	1.74	2.91	5.60	6.15	1.475	1.72	2.70	5.16	5.66	1.520	1.70	2.53	4.80	5.29
1.431	1.74	2.91	5.59	6.14	1.476	1.72	2.70	5.15	5.65	1.521	1.70	2.52	4.79	5.28
1.432	1.74	2.90	5.58	6.13	1.477	1.72	2.69	5.14	5.64	1.522	1.70	2.52	4.79	5.27
1.433	1.74	2.90	5.57	6.11	1.478	1.72	2.69	5.14	5.63	1.523	1.70	2.52	4.78	5.27
1.434	1.74	2.89	5.56	6.10	1.479	1.72	2.68	5.13	5.62	1.524	1.70	2.51	4.78	5.26
1.435	1.74	2.89	5.55	6.09	1.480	1.72	2.68	5.12	5.61	1.525	1.70	2.51	4.77	5.25
1.436	1.74	2.88	5.54	6.08	1.481	1.72	2.68	5.11	5.60	1.526	1.70	2.51	4.77	5.24
1.437	1.74	2.88	5.53	6.07	1.482	1.72	2.67	5.10	5.59	1.527	1.70	2.50	4.76	5.23
1.438	1.74	2.87	5.52	6.05	1.483	1.72	2.67	5.10	5.59	1.528	1.70	2.50	4.76	5.23
1.439	1.74	2.87	5.51	6.04	1.484	1.72	2.66	5.09	5.58	1.529	1.70	2.49	4.75	5.22
1.440	1.74	2.86	5.50	6.03	1.485	1.72	2.66	5.08	5.57	1.530	1.70	2.49	4.74	5.21
1.441	1.74	2.86	5.49	6.02	1.486	1.72	2.66	5.07	5.56	1.531	1.70	2.49	4.73	5.20
1.442	1.74	2.85	5.48	6.01	1.487	1.72	2.65	5.06	5.55	1.532	1.70	2.48	4.72	5.19
1.443	1.74	2.85	5.47	6.00	1.488	1.72	2.65	5.06	5.55	1.533	1.70	2.48	4.72	5.19
1.444	1.74	2.84	5.46	5.99	1.489	1.72	2.64	5.05	5.54	1.534	1.70	2.48	4.71	5.18
1.445	1.74	2.84	5.45	5.98	1.490	1.72	2.64	5.04	5.53	1.535	1.70	2.47	4.70	5.17
1.446	1.74	2.83	5.44	5.97	1.491	1.72	2.64	5.03	5.52	1.536	1.70	2.47	4.69	5.16
1.447	1.73	2.83	5.43	5.96	1.492	1.72	2.63	5.02	5.51	1.537	1.70	2.47	4.68	5.15
1.448	1.73	2.82	5.42	5.95	1.493	1.71	2.63	5.02	5.51	1.538	1.69	2.46	4.68	5.15
1.449	1.73	2.82	5.41	5.94	1.494	1.71	2.62	5.01	5.50	1.539	1.69	2.46	4.67	5.14
1.450	1.73	2.81	5.40	5.93	1.495	1.71	2.62	5.00	5.49	1.540	1.69	2.46	4.66	5.13

ASMENORMDOC.COM : Click to view the full PDF of ASME RTP-1 2019

Table NM2-4 Values of *T*, *Z*, *Y*, and *U* (Factors Involving *K*) (Cont'd)

K	*T*	*Z*	*Y*	*U*	*K*	*T*	*Z*	*Y*	*U*	*K*	*T*	*Z*	*Y*	*U*
1.541	1.69	2.45	4.66	5.12	1.556	1.69	2.41	4.57	5.02	1.571	1.68	2.36	4.47	4.91
1.542	1.69	2.45	4.65	5.11	1.557	1.69	2.40	4.56	5.01	1.572	1.68	2.36	4.47	4.91
1.543	1.69	2.45	4.64	5.11	1.558	1.69	2.40	4.56	5.00	1.573	1.68	2.36	4.46	4.90
1.544	1.69	2.45	4.64	5.10	1.559	1.69	2.40	4.55	4.99	1.574	1.68	2.35	4.46	4.89
1.545	1.69	2.44	4.63	5.09	1.560	1.69	2.40	4.54	4.99	1.575	1.68	2.35	4.45	4.89
1.546	1.69	2.44	4.63	5.08	1.561	1.69	2.39	4.54	4.98	1.576	1.68	2.35	4.44	4.88
1.547	1.69	2.44	4.62	5.07	1.562	1.69	2.39	4.53	4.97	1.577	1.68	2.35	4.44	4.88
1.548	1.69	2.43	4.62	5.07	1.563	1.68	2.39	4.52	4.97	1.578	1.68	2.34	4.43	4.87
1.549	1.69	2.43	4.61	5.06	1.564	1.68	2.38	4.51	4.96	1.579	1.68	2.34	4.42	4.86
1.550	1.69	2.43	4.60	5.05	1.565	1.68	2.38	4.51	4.95	1.580	1.68	2.34	4.42	4.86
1.551	1.69	2.42	4.60	5.05	1.566	1.68	2.38	4.50	4.95	...	...	...	...	...
1.552	1.69	2.42	4.59	5.04	1.567	1.68	2.37	4.50	4.94	...	...	...	...	...
1.553	1.69	2.42	4.58	5.03	1.568	1.68	2.37	4.49	4.93	...	...	...	...	...
1.554	1.69	2.41	4.58	5.03	1.569	1.68	2.37	4.48	4.92	...	...	...	...	...
1.555	1.69	2.41	4.57	5.02	1.570	1.68	2.37	4.48	4.92	...	...	...	...	...

ASMENORMDOC.COM : Click to view the full PDF of ASME RTP-1 2019

NONMANDATORY APPENDIX NM-3 SEISMIC, WIND, AND SNOW LOADINGS

(19) NM3-100 TYPICAL CODES

The User/Purchaser shall be responsible for the specification of the appropriate code to be used. The code specifies to the designer the magnitude and direction of the seismic, wind, and snow loads acting on the vessel. The designer shall use recognized stress analysis methods to compute the stresses resulting from these loads.

The following is a list of examples of international codes, standards, and manuals that may serve to determine seismic, wind, and snow loads acting on the vessel:

(a) Uniform Building Code, published by International Code Council

(b) National Building Code, published by American Insurance Association

(c) Minimum Design Loads for Buildings and Other Structures, ASCE 7, published by American Society of Civil Engineers

(d) International Building Code, published by International Code Council

(e) Standard Building Code, published by International Code Council

(f) British Standard BS 6399 Part 2, Loading for Buildings, Code of Practice for Wind Loads

(g) Dutch Standard NEN 6702 — TGB 1990, Loadings and Deformations

(h) Eurocode 1, Part 2-4, Basis of Design and Actions on Structures

(i) Eurocode 8, Part 1-5, Design Provisions for Earthquake Resistance of Structures

(j) Mexican Code, Manual de Diseño de Obras Civiles de la Comisión Federal de Electricidad

(k) National Building Code of Canada

NOTE: The Qualified Designer who certifies the Fabricator's Design Report per requirements of Part 1, para. 1-300 of this Standard should verify that the Code given in UBRS is used. If Code (e.g., IBC) is not specified in UBRS, the Qualified Designer or Fabricator, should make a request that User/Purchaser specifies Code in writing.

NM3-200 NOMENCLATURE

C = distance of neutral axis, in.
D = nominal vessel diameter, ft
D_i = inside diameter, in.
D_o = outside diameter, in.
E = tensile modulus of elasticity, psi
F = design factor
F_{cra} = allowable axial stress (buckling)
F_{crb} = allowable flexural stress (buckling)
F_{crv} = allowable shear stress (buckling)
F_h = allowable hoop tensile stress (ultimate)
f_a = axial stress
f_b = flexural stress
f_{cra} = critical axial buckling stress
f_{crb} = critical flexural buckling stress
f_{crv} = critical shear buckling stress
f_h = hoop tensile stress
f_v = shear stress
H = vessel height, ft
I = moment of inertia of vessel shell cross section, in.^{4}
M_w = bending moment due to wind load, ft-lb
N_a = axial stress resultant, lb/in.
P = hydrostatic pressure (total), psig
q = wind pressure, psf
R_c = head crown radius, in.
S_u = ultimate tensile strength, psi
SF = shape factor
U = uniform wind pressure load, lb/ft
U_T = wind load on top flange, lb/ft
W = total wind load, lb

NM3-300 EXAMPLES

(a) Wind Loads

(1) cantilevered vessel empty (flat bottomed on slab)
(2) suspended vessel empty (ring or skirt supported)
(3) cantilevered vessel at design conditions
(4) suspended vessel at design conditions

(b) Snow Load on Empty Vessel. The snow load example below assumes that the detailed design of the top head has been done such that the snow load is transferred uniformly to the shell. The snow load on the top head is assumed to be a uniform external pressure on the cover. See para. 3A-320. All the example vessels are built of Type I or Type II laminates.

(c) Seismic Load on Flat-Bottom Vertical Tank

ASMENORMDOC.COM : Click to view the full PDF of ASME RTP-1 2019

NM3-310 Loading Criteria

In the examples below, the load causes shear stress and normal stress in both axial and hoop directions, all simultaneously. In some cases, the normal stress is compressive, which, if excessive, could cause buckling. Therefore, biaxial strength and buckling criteria are needed to complete the examples.

(a) Paragraphs 3B-500 and M3-530 contain provisions, based on lamination analysis, for calculating the resistance of any type of laminate to biaxial stress; however, the calculations are complicated. For Type I laminates, a conservative approximation to these provisions is

$$f_a^2 - f_a f_h + f_h^2 + 2.25 f_v^2 < (S_u/F)^2$$

For Type II laminates, a conservative approximation to paras. 3B-300 and M3-530 is

$$f_a = |S_u/F| \text{ and } f_h = |S_u/F|$$

if the shear stress is less than 200 psi (1.38 MPa). These approximations are used in this Appendix instead of the more exact procedure in paras. 3B-300 and M3-530. According to para. 3B-500, the design factor F = 10 for sustained loads, and F = 10/1.2 = 8.33 for wind, seismic, or snow loads, or for a combination of sustained loads and wind, seismic, or snow loads.

(b) The interaction criterion for buckling is

$$\left|f_a F/f_{cra}\right| + \left|f_b F/f_{crb}\right| + \left(f_v F/f_{crv}\right)^2 < 1$$

This equation applies only to compressive normal stress. In all cases, the design factor F = 5 for buckling. The buckling criterion is the same as in Equation 9.93, page 1006, of the American Society of Civil Engineers' *Structural Plastics Design Manual,* ASCE Manuals and Reports on Engineering Practice No. 63, 1984.

NM3-320 Design for Sustained Loads

Case (a) is a vented tank with a flat-bottom head and a torispherical top head. The tank is constructed of Type II laminate, bolted to a concrete pad, 12 ft in diameter and 24 ft high, and contains a liquid with a specific gravity of 1.2. The tank is located outdoors in St. Louis, Missouri.

Paragraph 3A-210 requires a shell thickness given by:

$$\begin{aligned} t &= FPD_i/2S_u \\ &= (10)(24)(12)(0.03613)(1.2)(144)/(2)(15{,}000) \\ &= 0.599 \text{ in.} \end{aligned}$$

The laminate strength is from Table 2A-3, for Type II laminate. The next thickest standard Type II laminate is 0.64 in. thick (Table 2A-2). Thus, take t = 0.64 in. Assume that the shell tapers to 0.22 in. thick at the top, that the head is 0.29 in. thick, and that the flat bottom head is 0.37 in. thick. Then the shell weighs 3,500 lb, the top head weighs 319 lb, and the bottom weighs 340 lb, for a total vessel weight of 4,159 lb.

Case (b) is a vented tank 9 ft in diameter and 18 ft long from tangent line to tangent line. It has torispherical heads on both ends and it is supported by a ring 6 ft from the top of the shell. As in case (a), it is located outdoors in St. Louis, Missouri and contains a liquid with specific gravity = 1.2. The vessel is constructed of Type I laminate, which has S_u = 9,000 psi according to Table 2A-3. Paragraph 3A-230 requires that the bottom head have the following thickness:

$$\begin{aligned} t &= 0.885\, FPR_c/S_u \\ &= (10)(0.885)(18)(12)(0.03613)(1.2)(108)/(9{,}000) \\ &= 0.995 \text{ in.} \end{aligned}$$

(Use 1.00 in. nominal thickness, per Table 2A-2.) The top head thickness would be governed by the "footprint" load specified by para. 3A-340. Nonmandatory Appendix NM-11 gives a method for designing for this load, which in this case gives a thickness of 0.35 in. The shell thickness just above the ring is given by para. 3A-210 as follows:

$$\begin{aligned} t &= FPD_i/2S_u \\ &= (10)(6)(12)(0.03613)(1.2)(108)/(2)(9{,}000) \\ &= 0.187 \text{ in.} \end{aligned}$$

However, para. 3-200(f) and Table 2A-1, taken together, require that the thickness of the shell be at least 0.23 in. Similarly, the shell thickness 12 ft from the top is found from

$$\begin{aligned} t &= FPD_i/2S_u \\ &= (10)(12)(12)(0.03613)(1.2)(108)/(2)(9{,}000) \\ &= 0.375 \text{ in.} \end{aligned}$$

or, rounding up to a standard laminate, t = 0.40 in. The shell thickness 18 ft from the top is found the same way

$$\begin{aligned} t &= FPD_i/2S_u \\ &= (10)(18)(12)(0.03613)(1.2)(108)/(2)(9{,}000) \\ &= 0.562 \text{ in.} \end{aligned}$$

which rounds up to 0.57 in. The total weight of the liquid is found from

$$\text{weight} = (3.1416)(4.5)^2(18)(62.4)(1.2) = 85{,}746 \text{ lb}$$

The vessel weighs approximately 2,000 lb; therefore, the axial stress resultant just below the ring is

$$N_a = (85{,}746 + 2{,}000)/(3.1416)(108) = 259 \text{ lb/in.}$$

The thickness required to resist the axial load is given by para. 3A-210

$$\begin{aligned} t &= FN_a/s_u \\ &= (10)(259)/(9{,}000) = 0.287 \text{ in.} \end{aligned}$$

ASMENORMDOC.COM Click to view the full PDF of ASME RTP-1 2019

which is less than the thickness required to resist the hoop stress. Thus, hoop stress governs and t = 0.57 in.

NM3-321 Example (a2): Empty Cantilevered Vessel Under Wind Load. This is a continuation of case (a) in para. NM3-320; it is the same flat-bottom tank with wind loading. According to Uniform Building Code (UBC) rules, the wind pressure zone for St. Louis is 30. From UBC Table 23-F, the design wind pressure for zone 30 is 25 psf. The shape factor per Table 23-G is SF = 0.8. Then the wind load is

$$U = (SF)qD = (0.8)(25)(12) = 240 \text{ lb/ft of height}$$

The bending moment at the base of the vessel is

$$\begin{aligned} M_w &= {}^1\!/_2 UH^2 \\ &= (0.5)(240)(24)^2 \\ &= 69{,}120 \text{ ft-lb} = 829{,}440 \text{ in.-lb} \end{aligned}$$

and the total lateral force is

$$W = UH = (240)(24) = 5{,}760 \text{ lb}$$

The total vessel weight is 4,159 lb and the weight of the bottom is 340 lb; thus, the weight transmitted through the shell at the base is 4,159 – 340 = 3,819 lb. The axial stress at the base is then

$$f_a = -\,3{,}819/(3.1416)(144)(0.64) = -\,13.2 \text{ psi}$$

where the negative sign denotes compression. The axial stress on the downwind side of the base resulting from the wind moment is given by

$$f_b = -\,M_w C/I$$

The moment of inertia is calculated from

$$\begin{aligned} I &= (3.1416)\left(D_0^4 - D_i^4\right)/64 \\ &= (3.1416/64)\left(145.28^4 - 144^4\right) \\ &= 760{,}525 \text{ in.}^4 \end{aligned}$$

and C = 72.64 in. Thus

$$f_b = -\,(829{,}440)(72.64)/(760{,}525) = -\,79.2 \text{ psi}$$

The total axial stress is then $f_a + f_b$ = –92.4 psi. The tank is built of Type II laminate, for which S_u = 15,000 psi. However, F = 8.33 and the allowable stress is 15,000/8.33 = 1,800 psi. The shear stress is

$$f_v = 5{,}760/(3.1416)(144)(0.64) = 19.9 \text{ psi}$$

Since f_v < 200 psi, the criterion for Type II laminates stated in para. NM3-310 applies. It is

$$\left|f_a + f_b\right| = 92.4 < 1{,}800 \text{ psi}$$

which satisfies para. NM3-310. Thus, the design is acceptable for wind load on the empty tank, as far as strength is concerned.

The tank must also be checked for elastic stability. The critical buckling stress for uniformly distributed axial compression is

$$\begin{aligned} f_{cra} &= 0.3Et/R \\ &= (0.3)\left(1.5 \times 10^6\right)(0.64)/72 \\ &= 4{,}000 \text{ psi} \end{aligned}$$

The critical stress for buckling from bending under the wind moment is

$$f_{crb} = 1.3 f_{cra} = 5{,}200 \text{ psi}$$

For shear, the critical buckling stress for thin-walled tube of circular cross section is given by

$$\begin{aligned} f_{crv} &= 0.695E(t/R)^{5/4}(R/H)^{1/2} \\ &= 0.695\left(1.5 \times 10^6\right)(0.64/72)^{5/4}(72/288)^{1/2} \\ &= 1{,}423 \text{ psi} \end{aligned}$$

The buckling interaction equation from para. NM3-310 is

$$\left|f_a F/f_{cra}\right| + \left|f_b F/f_{crb}\right| + \left(f_v F/f_{crv}\right)^2 < 1$$

Inserting values for this example gives

$$\begin{aligned} &|(13.2)(5)/4{,}000| + |(79.2)(5)/5{,}200| + [(19.9)(5)/1{,}423]^2 \\ &= 0.098 < 1 \end{aligned}$$

which shows that the empty tank will not fail by buckling under the design wind load. If the strength and buckling conditions had not been satisfied, then the shell thickness would have to have been increased.

NM3-322 Empty Ring Supported Vessel Under Wind Load. This is a continuation of case (b) in para. NM3-320. As before, the wind pressure is 25 psf and the shape factor is 0.8. The wind load U is

$$\begin{aligned} U &= (SF)qD \\ &= (0.8)(25)(9) = 180 \text{ lb/ft} \end{aligned}$$

The total force above the ring is (180)(6) = 1,080 lb, and the corresponding bending moment is ½ (1,080)(6) = 3,240 ft-lb. The total force below the ring is (180)(12) = 2,160 lb, and the corresponding moment is ½(2,160)(12) = 12,960 ft-lb. This is the largest bending moment in the vessel. Thus, M_w = 12,960 ft-lb = 155,520 in.-lb. Check the stress in the vessel just below the support ring.

(a) Axial. The weight of the shell below the support plus the weight of the bottom head is 1,300 lb. The axial stress from the weight is then

ASMENORMDOC.COM : Click to view the full PDF of ASME RTP-1 2019

$$f_a = (1{,}300)/(3.1416)(108)(0.40) = 9.58 \text{ psi}$$

(b) *Bending Below the Support*

$$f_b = M_w C/I$$

$$I = (3.1416/64)\left(D_0^4 - D_i^4\right) = (3.1416/64)(108.8^4 - 108^4) = 200{,}084 \text{ in.}^4$$

$$C = 54.4 \text{ in.}$$

$$f_b = (155{,}520)(54.4)/200{,}084 = 42.3 \text{ psi}$$

(c) *Shear*

$$f_v = 2{,}160/(3.1416)(108)(0.40) = 15.9 \text{ psi}$$

The strength criterion for Type I laminates is

$$f_a^2 - f_a f_h + f_h^2 + 2.25 f_v^2 < (S_u/F)^2$$

The axial stress is the sum of the stresses from weight and bending: f_a = 9.58 + 42.3 = 51.9 psi. The hoop stress, f_h, vanishes and f_v = 15.9 psi. We insert these values in the criterion

$$(51.9)^2 + 2.25(15.9)^2 = 3{,}262 < (9{,}000/8.33)^2 = 1.17 \times 10^6$$

which is satisfied. The axial stress from the weight is tensile and, therefore, does not enter into the check for buckling. The critical bending stress for buckling is

$$f_{crb} = (1.3)(0.3)Et/R = (1.3)(0.3)\left(1.0 \times 10^6\right)(0.4)/54 = 2{,}889 \text{ psi}$$

The critical shear buckling stress is

$$f_{crv} = 0.695E(t/R)^{5/4}(R/H)^{1/2} = (0.695)\left(1.0 \times 10^6\right)(0.40/54)^{5/4}(54/144)^{1/2} = 925 \text{ psi}$$

The buckling interaction formula is

$$\left|f_a F/f_{cra}\right| + \left|f_b F/f_{crb}\right| + \left(f_v F/f_{crv}\right)^2 < 1$$

With the current values in place

$$|(5)(42.3)/2{,}889| + [(5)(15.9)/925]^2 = 0.081 < 1$$

which is satisfied.

Both strength and buckling criteria are fulfilled, and the design is acceptable for withstanding wind loads while the vessel is empty.

NM3-323 Flat-Bottomed Vessel Under Design Conditions With Wind Load. The hoop stress due to hydrostatic pressure must be combined with the axial stress caused by wind and weight, using a design factor of $F = 10/1.2 = 8.33$.

$$f_h = PR/t$$

where P is the sum of hydrostatic and design pressures.

$$f_h = (24)(12)(0.03613)(1.2)(72)/0.64 = 1{,}405 \text{ psi}$$

From para. NM3-321, the bending stress is 79.2 psi, the axial weight stress is 13.2 psi, and thus the overall axial stress is 79.2 + 13.2 = 92.4 psi. The shear stress is 19.9 psi, which is less than 200 psi, so the simplified criterion for Type II laminates applies

$$\left|f_a\right| = 92.4 < 15{,}000/8.33 = 1{,}800 \text{ psi}$$

$$\left|f_h\right| = 1{,}405 < 15{,}000/8.33 = 1{,}800 \text{ psi}$$

which are both acceptable.

NM3-324 Ring Supported Vessel Under Operating Conditions and Wind Load. In this case, the hoop stress and axial stresses caused by the hydrostatic load must be superposed on the weight and wind stresses computed in para. NM3-322. The governing location is just under the ring, and the hoop stress there is given by

$$f_h = (6)(12)(0.03613)(1.2)(54)/0.40 = 421 \text{ psi}$$

Axial stresses are from the weight of the contents, the weight of the vessel, and the wind moment. The contents weight is $(3.1416)(4.5)^2(18)(62.4)(1.2)$ = 85,746 lb. The weight of the vessel below the support is 1,300 lb. Then the axial stress from weight is

$$f_a = (85{,}746 + 1{,}300)/(3.1416)(108)(0.40) = 641 \text{ psi}$$

The stress from the wind moment is 42.3 psi, and the total axial stress becomes 641 + 42.3 = 683.3 psi. From above, the shear stress is 15.9 psi. The strength criterion is

$$f_a^2 - f_a f_h + f_h^2 + 2.25 f_c^2 < (S_u/F)^2$$

With the values from the example, this becomes

$$(683.3)^2 - (683.3)(421) + (421)^2 + 2.25(15.9)^2 = 357{,}400$$

but $357{,}400 < (9{,}000/8.33)^2 = 1.17 \times 10^6$, and the strength is adequate.

ASMENORMDOC.COM: Click to view the full PDF of ASME RTP-1 2019

NM3-325 Snow Load on Top Head of Flat-Bottomed Example Vessel. The vessel top head must be designed to support the snow load and transfer the load to the vessel shell. The snow load can be treated as a uniform external pressure applied to the top head. The design snow load in St. Louis is 25 psf. Thus, the weight of the snow on the 12-ft diameter head = $(3.1416)(6)^2(25)$= 2,827 lb. Taking the head weight as 275 lb, the combined weight equals 3,102 lb. The weight causes an axial stress in the shell

$$f_a = 3{,}102/(3.1416)(144)(0.64) = 11\text{psi}$$

The allowable stress for strength is 15,000/8.33 = 1,800 psi, and the critical axial buckling stress was calculated in para. NM3-321 as 4,000 psi. Thus, the allowable stress to ensure elastic stability is 4,000/5 = 800 psi. Both allowable stresses are much greater than 11 psi, the applied stress.

NOTE: If the vessel must withstand external pressure, the external pressure exerted by the snow must be added to the design external pressure for calculating the head thickness. Thus, if the vessel has a torispherical head, the head thickness is calculated by the equation in para. 3A-320, and the term P_a is the sum of the design external pressure and the snow pressure. This combination of loads may govern, the "footprint" load requirements in para. 3A-340 may govern, or internal pressure may govern.

NM3-326 Seismic Loading on Vessels. A vessel experiencing a seismic event has its base accelerated both laterally and vertically by strong ground motion. The vessel shell, internals, and any contents respond dynamically to this base excitation depending upon their mass and natural frequency. The vessel and contents may be analyzed dynamically or statically using an equivalent loading magnitude that depends upon the seismic area and importance factor. This section presents a method for the calculation of seismic loads based on spectral acceleration and probabilistic ground motion. This method is based on API 650-2000 (Section E.3), ASCE 7-02 (Sections 2.4.1 and 9.14.17.3.8), and the USGS Earthquake Hazards Program.

In large fluid-filled tanks, the total mass is considered either "fixed" or "sloshing." Fixed mass includes the mass of the tank structure and that part of the contents which moves in phase with the tank shell at its natural frequency. Sloshing mass is that part of the contents that responds in a "sloshing mode," whose frequency is a function of the tank diameter and height. Tall, slender tanks have more fixed contents than those that are lower and wider. Variations in process design, available space, and custom internals lead to wide variations in aspect ratio as well as the amount of fixed mass other than that of the fluid contents. It will be seen that the base shear and moment contribution for sloshing mass depend upon the sloshing period, but the fixed mass contributions do not.

NM3-327 Spectral Loading. Spectral acceleration is defined as the maximum response of a single degree of freedom (SDOF) system to a given seismic event. Such a system can be characterized by its natural period of vibration, T, and the amount of damping present. A plot of spectral acceleration as a function of natural period is called a Response Spectrum. In the case of ground-supported liquid storage tanks, the Response Spectrum is completely defined by T and the mapped spectral accelerations (SA) at periods of 0.2 sec, S_s, and 1.0 sec, S_1. The values of S_s and S_1, obtained from the USGS website, are based upon 5% of critical damping and a given probability of exceedance (PE) in 50 yr. Unless otherwise given in the UBRS, the S_s and S_1 values for 5% PE should be used.

In order to obtain a Response Spectrum for a given location and soil type, S_s and S_1 are first converted to their maximum considered mapped values, S_{ms} and S_{m1}, by multiplying them by Site Factors F_a and F_v. F_a and F_v depend upon the type of soil (Site Class) and the values of S_s and S_1. If detailed information on the site is not available, Site Class D should be assumed. The spectral design parameters, S_{ms}, S_{m1}, S_{ds}, S_{d1}, and T_s for vessel loading, and Site D values for F_a and F_v are given below.

S_s	F_a	S_1	F_v
<0.25	1.6	<0.10	2.4
0.6	1.4	0.20	2.0
0.75	1.2	0.30	1.8
1.0	1.1	0.40	1.6
>1.25	1.0	>0.50	1.5

$$S_{ms} = F_a \times \frac{S_s}{100}$$

$$S_{m1} = F_v \times \frac{S_1}{100}$$

$$S_{ds} = \frac{2}{3} \times S_{ms}$$

$$S_{d1} = \frac{2}{3} \times S_{m1}$$

$$T_s,\ sec = \frac{S_{d1}}{S_{ds}}$$

NM3-328 Fixed and Sloshing Mass for the Contents. In order to calculate shear and moment at the base, it is necessary to determine the amount of fixed mass, sloshing mass, and their centroids, plus the sloshing period. All are functions of the aspect ratio, $\alpha = D/H_c$, where D and H_c are the vessel diameter and contents height in feet, respectively. In the following, W_c is the total mass of contents in pounds, W_{fc}/W_c is the fixed mass fraction, and $W_{sc}/$

ASMENORMDOC.COM : Click to view the full PDF of ASME RTP-1 2019

W_c is the sloshing mass fraction. The centroidal positions of each type of mass are referenced to H_c.

(a) *Sloshing Period*

$$T_c,\ sec = \frac{0.578}{\sqrt{\tan h(3.67/\alpha)}}\sqrt{D}$$

(b) *Fixed Mass Fraction*

$$\frac{W_{fc}}{W_c} = 1 - 0.218\alpha \text{ for } \alpha \le 1.333$$

$$\frac{W_{fc}}{W_c} = \frac{\tan h(0.866\alpha)}{0.866\alpha} \text{for } \alpha > 1.333$$

(c) *Sloshing Mass Fraction*

$$\frac{W_{sc}}{W_c} = 1 - \frac{W_{fc}}{W_c}$$

(d) *Fixed Mass Centroid*

$$\frac{H_{fc}}{H_c} = 0.5 - 0.094\alpha \text{ for } \alpha \le 1.333$$

$$\frac{H_{fc}}{H_c} = 0.375 \text{ for } \alpha > 1.333$$

(e) *Sloshing Mass Centroid*

$$\frac{H_{sc}}{H_c} = 1 - \left[\cos h\left(\frac{3.67}{\alpha}\right) - 1\right]\left[\frac{3.67}{\alpha}\sin h\left(\frac{3.67}{\alpha}\right)\right]^{-1}$$

NM3-329 Base Shear and Moment. For an atmospheric storage vessel with full contents, the fixed mass consists of the shell, W_{sh}, and head, W_h, plus the fixed portion of the contents, W_{fc}. For $T_c \le T_s$, W_{fc} is taken equal to the total contents weight, W_c.

The base shear, V_b, and base moment, M_b, depend upon an importance factor, I; the ratio, T_s; the short period design value, S_{ds}; and the sloshing period, T_c. In this case, the vessel height, H, and contents height, H_c, are equal. Following ASCE 7-02, in an allowable stress design, both V_b and M_b are multiplied by the factor 0.7. M_b is then multiplied by 12 to convert the base moment to in.-lb.

For $T_c \le T_s$,

$$V_b = (0.7)(0.24S_{ds}I)(W_{sh} + W_h + W_c)$$

$$M_b = (0.7)(12)(0.24S_{ds}I)\left(W_{sh}\frac{H}{2} + W_hH + W_c\frac{H_c}{2}\right)$$

For $T_s < T_c \le 4.0$,

$$V_{bf} = (0.24S_{ds}I)(W_{sh} + W_h + W_{fc})$$

$$V_{bs} = 0.8S_{ds}I\left(\frac{0.75}{T_c}\right)T_sW_{sc}$$

$$V_b = (0.7)(V_{bf} + V_{bs})$$

$$M_b = (0.7)(12)\left[(0.24S_{ds}I)\left(W_{sh}\frac{H}{2} + W_hH + W_{fc}H_{fc}\right) + V_{bs}H_{sc}\right]$$

For $T_c > 4.0$,

$$V_{bf} = (0.24S_{ds}I)\left(W_{sh} + W_h + W_{fc}\right)$$

$$V_{bs} = 0.71S_{ds}I\left(\frac{3.375}{T_c^2}\right)T_sW_{sc}$$

$$V_b = (0.7)\left(V_{bf} + V_{bs}\right)$$

$$M_b = (0.7)(12)\left[(0.24S_{ds}I)\left(W_{sh}\frac{H}{2} + W_hH + W_{fc}H_{fc}\right) + V_{bs}H_{sc}\right]$$

If the vessel has N hold-down lugs, the maximum hold-down force, F_h, is given below, where R is the vessel radius in inches, and F_u is any uplift. Note that if $F_h < 0$, the lugs are unloaded and also that the contents cannot be used to reduce F_h since they are supported by the base pad.

$$F_h = \frac{1.695M_b - 1.46(W_{sh} + W_h)R}{NR} + \frac{F_u}{N}$$

The above shear and moment expressions may be extended to include the effect of internals or other fixed masses supported above the vessel base. It is also possible to include a base skirt, in which case the contents' weight, fully supported above the base, will act to unload the lugs.

NM3-330 Hold-Downs for Seismic Loading

It is necessary to evaluate the capacity of the hold-downs to handle both pullout and lateral shear. The design of various types of hold-downs for pullout is addressed in Nonmandatory Appendix NM-4. Although the vessel designer does calculate the forces and stresses in the hold-downs, it is typically the responsibility of a licensed civil or structural engineer to calculate the capacity of the hold-down embedments in the support slab.

Most civil/structural specifications will not allow the use of the friction between the vessel bottom and the support pad as a part of the base shear capacity. This means either that the hold-downs must be designed to

ASMENORMDOC.COM : Click to view the full PDF of ASME RTP-1 2019

resist lateral shear or that some other means must be provided. Where high lateral shear exists, consideration may be given to grouting against a shear lip that is cast into the pad. Another method is to grout between the vessel and a circumferential angle attached to the pad, as long as care is taken to prevent fluid retention, which could present corrosion problems for the vessel bottom.

(19) **NM3-331 Example.** Calculate the base shear, base moment, and maximum hold-down force for an 8 ft × 13 ft tank with eight hold-down lugs and full contents whose specific gravity is 1.2. The weight of the shell is 750 lb and that of the head is 175 lb. The tank is at a location whose zip code is 98226. No detailed geotechnic information on the site is available. The owner or user's insurance company has specified that an importance factor of 1.25 be used and that the design seismic event have only a 5% chance of being exceeded in 50 yr. From the USGS website for zip code 98226 and 5% PE, the value of S_s = 64.59% and S_1 = 21.46%. Since no geotechnic information is available, Site Class D is assumed.

(a) Spectral Parameters

$$F_a = 1.34$$

$$F_v = 1.97$$

$$S_{ms} = 1.34\left(\frac{64.59}{100}\right) = 0.866$$

$$S_{m1} = 1.97\left(\frac{21.46}{100}\right) = 0.423$$

$$S_{ds} = \frac{2}{3}(0.866) = 0.577$$

$$S_{d1} = \frac{2}{3}(0.423) = 0.282$$

$$T_s = \frac{0.282}{0.577} = 0.489$$

(b) Sloshing Period

$$\alpha = \frac{8}{13} = 0.615$$

$$T_c,\ \text{sec} = \frac{0.578}{\sqrt{\tan h(3.67/0.615)}}\sqrt{8} = 1.635$$

(c) Weight and Mass Fractions

$$W_c,\ \text{lb} = 0.785(8)^2(13)(62.4)(1.2) = 48{,}906$$

$$\frac{W_{fc}}{W_c} = 1 - 0.218(0.615) = 0.866$$

$$W_{fc},\ \text{lb} = (0.866)(48{,}906) = 42{,}353$$

$$\frac{W_{sc}}{W_c} = 1 - 0.866 = 0.134$$

$$W_{sc},\ \text{lb} = (0.134)(48{,}906) = 6{,}553$$

(d) Centroidal Locations for Fixed and Sloshing Mass

$$\frac{H_{fc}}{H_c} = 0.5 - 0.094(0.615) = 0.442$$

$$H_{fc},\ \text{ft} = (0.442)(13.0) = 5.75$$

$$\frac{H_{sc}}{H_c} = 1 - \left[\cos h\left(\frac{3.67}{0.615}\right) - 1\right]\left[\frac{3.67}{0.615}\sin h\left(\frac{3.67}{0.615}\right)\right]^{-1} = 0.833$$

$$H_{sc},\ \text{ft} = (0.833)(13.0) = 10.83$$

(e) Base Shear and Moment

$$T_s = 0.489 < T_c = 1.635 < 4.0$$

$$V_{bf} = (0.24)(0.577)(1.25)(750 + 175 + 42{,}353) = 7{,}491$$

$$V_{bs},\ \text{lb} = (0.8)(0.577)(1.25)\left(\frac{0.75}{1.635}\right)(0.489)(6{,}553) = 848$$

$$V_b,\ \text{lb} = (0.7)(7{,}491 + 848) = 5{,}837$$

$$M_b,\text{in.-lb} = (0.7)(12)\{(0.24)(0.577)(1.25)\left[750\left(\frac{13}{2}\right) + 175(13) + 42{,}353(5.75)\right] + 848(10.83)\} = 441{,}643$$

(f) Hold-Down Force

$$F_h,\ \text{lb} = \frac{(1.695)(441{,}643) - (1.46)(750 + 175)(48)}{(8)(48)} = 1{,}781$$

ASMENORMDOC.COM : Click to view the full PDF of ASME RTP-1 2019

NONMANDATORY APPENDIX NM-4
HOLD-DOWN LUG DESIGN

NM4-100 SCOPE

This Appendix provides methods for the design of lugs attached by hoop winding or secondary bonding. It is recommended that continuous loads be handled by lugs supported by metal bands or double rings as described in Nonmandatory Appendix NM-5.

When wound-on lugs are used for intermittent or occasional loads, such as lift due to wind or minor flooding, a design factor of 5 on the combined stress in the laminate is recommended. If wound-on lugs are used in continuous loading, such as for the support of vessels not exceeding 4-ft diameter or flat bottom vessels subject to uplift loads due to internal pressure, the usual design factor of 10 should be applied to the combined stress in the laminate. Hold-down lugs used for anchoring vessels are subject to uplift loads due to internal pressure. Designers are cautioned that flat tank bottoms as specified per para. 3A-260 are not sufficiently stiff to permit the use of the weight of the liquid contents of the tank to resist wind and/or seismic overturning forces. The hold-down system should be designed for the total base moment.

NM4-200 NOMENCLATURE

$B.C.D.$ = bolt circle diameter, in.
D = nominal vessel diameter, ft
D_i = vessel inside diameter, in.
D_o = vessel outside diameter, in.
d = bar diameter, in.
E_{ax} = axial tensile modulus of elasticity, psi
E_{hp} = hoop tensile modulus of elasticity, psi
e = load eccentricity, in. (see Figures NM4-1, NM4-2A, and NM4-2B)
F = total load or reaction at lug, lb
F_H = force in horizontal direction (radial), lb
G = wind pressure, psf
H = height of vessel straight side, ft
H_D = depth of top head, ft
h = height of lug, in.
$h_{\min}$ = minimum height of lug, in.
h_1 = height of wound overwrap or overlay, in.
L = bar length, in.
M_{ax} = moment in axial direction, in.-lb
M_{hp} = moment in hoop direction, in.-lb
M_L = moment coefficient, dimensionless (see Figure NM4-3)
M_Q = bending moment due to wind load, ft-lb
N = number of lugs
P = total radial load due to moment, lb
P^* = unit load, lb/in.
P_G = wind uplift coefficient, dimensionless (see Figure NM4-4)
p = pressure, psi
R_m = mean radius of overwind, in.
S_a = allowable tensile stress, divided by design factor 10, psi
S_f = wind shape factor, dimensionless
= 0.7 for cylindrical vessels
T = total overwind tension, lb
t_b = thickness of vessel bottom, in.
t_k = thickness of knuckle region, in.
= $t_w + t_b$ (Type A only)
t_{lug} = lug thickness, in.
t_w = thickness of vessel wall, in.
t_1 = thickness of wound overwrap or overlay, in.
U_{net} = net uplift, lb
W = total load, lb
$W_{\max}$ = unit radial load on overwrap, lb/in.
W_v = vessel weight, lb
w = lug width, in.
β = coefficient of bending, in.$^{-1}$
ν = Poisson's ratio, dimensionless
σ = tensile stress, psi
τ_w = shear stress across vessel wall, psi

NM4-300 WOUND LUG DESIGN

This design analysis is based on the assumption that the lug is remote from either the top or bottom head of the vessel or any stiff support ring. This assumption results in a conservative analysis, since the full amount of local bending is presumed to occur. Typically, a major portion of the total stress in both the longitudinal and circumferential directions is due to this bending. In actuality, hold-down lugs are normally located in the reinforced regions adjacent to the shell-to-bottom-head junction.

A typical wound lug geometry is shown in Figure NM4-1. The vertical reaction, F, is taken into a wound-in shear ledge or transferred into the vessel as shear in the overwind as shown. The lug itself must be checked for bending stress.

ASMENORMDOC.COM : Click to view the full PDF of ASME RTP-1 2019

It is necessary to determine the lug force, F, from known loading conditions and statics. Based upon an assumed overwind force distribution, the overwind tension, T, and compressive heel reaction, P, may be determined. The average tensile stress in the overwind and shear in the vessel wall are then calculated. The necessary parameters are given in Figures NM4-1 and NM4-5.

The next step is to determine the combined state of stress in the vessel wall due to the local load, P, and vessel operating pressure. This is done by first calculating the average radial loading on the shell due to the lug width, w, and then evaluating the longitudinal bending moment that would be present in a similar shell under a ring load of the same intensity. The bending stresses due to this moment are then added to the membrane stress due to the vessel operating pressure to obtain the peak values of axial stress at the inner and outer surfaces of the vessel wall. The corresponding hoop stress in the wall is obtained by assuming that circular bending is occurring locally. The bending moment in the hoop direction is equal to the appropriate Poisson's ratio times the bending moment in the longitudinal direction. The stresses due to this bending are then added to the hoop stress due to the operating pressure to obtain the peak values of hoop stress at the inner and outer surfaces of the vessel wall.

A more exact determination of the local effects is given in the work of Bijlaard as summarized in Welding Research Council Bulletin WRC-107 or its earlier version given in the Department of Commerce Report PB151987 on local loading in thin shells. However, the approximate analysis given above accounts conservatively for the effects present.

NM4-400 SECONDARY BONDED LUG DESIGN

Lugs may be attached by means of secondary bonding. It is recommended that such attachments be designed for shear loading on the basis of a 200 psi allowable shear strength in the secondary bond. Secondary bonded attachments should not be designed for straight tensile loads. Such loading tends to peel off the overlaid reinforcement. It is recommended that radial loads, such as those resulting from eccentric moments, not exceed 50 lb per lineal inch tension. If tensile perimeter load is higher than 50 lb/in., in this case we have the option to use Type B lugs. These loads are normal to the overlay along that portion of the perimeter of the lug or clip that is actually subjected to tensile loading (see Figures NM4-2A, NM4-2B, and NM4-5).

Lugs are eccentrically loaded, resulting in a localized moment applied to the vessel shell. The minimum height of the lug shall be calculated based on the following:

$$h_{\min} = \left[\frac{6D_o W e M_L}{N S_a t_k^2}\right]^{\frac{1}{2}} \tag{1}$$

The lug must then be checked for shear. The minimum required overlay area of secondary bond shall be

$$A_r = W/200N$$

where A_r is the minimum required area, in square inches, of secondary bond overlay attached to the lug or the shell. If the size of the lug must be increased significantly to provide sufficient height to reduce the moment reaction or provide adequate area for the attachment of secondary bonding overlays, then additional lugs or a different type lug and attachment should be considered.

(a) Lug Reactions

$$M_A = 0$$

$$Fe - \left(\frac{W_{\max} h}{2}\right)\left(\frac{2h}{3}\right) = 0$$

$$W_{\max} = \frac{3Fe}{h^2}, \text{lb/in.}$$

$$F_H = 0$$

$$P = \frac{W_{\max} h}{2}, \text{lb}$$

(b) Overwind Tension

$$T = PR_m/w, \text{lb}$$

$$R_m = \frac{D_i + 2t_k}{2}$$

$$\sigma = T/h_1 t_1, \text{psi}$$

(c) Shear Across Vessel Wall

$$\tau_w = P/t_k w, \text{psi}$$

(d) Local Bending in Vessel Wall

$$\beta = \left[\frac{3(1-\nu^2)}{R_m^2 t_k^2}\right]^{1/4}$$

Assuming ν = 0.3,

$$\beta = 1.28/(R_m t_k)^{1/2}, \text{ in.}^{-1}$$

$$P^* = P/w, \text{ lb/in.}$$

ASMENORMDOC.COM : Click to view the full PDF of ASME RTP-1 2019

Figure NM4-1 Wound-On Hold-Down Lug

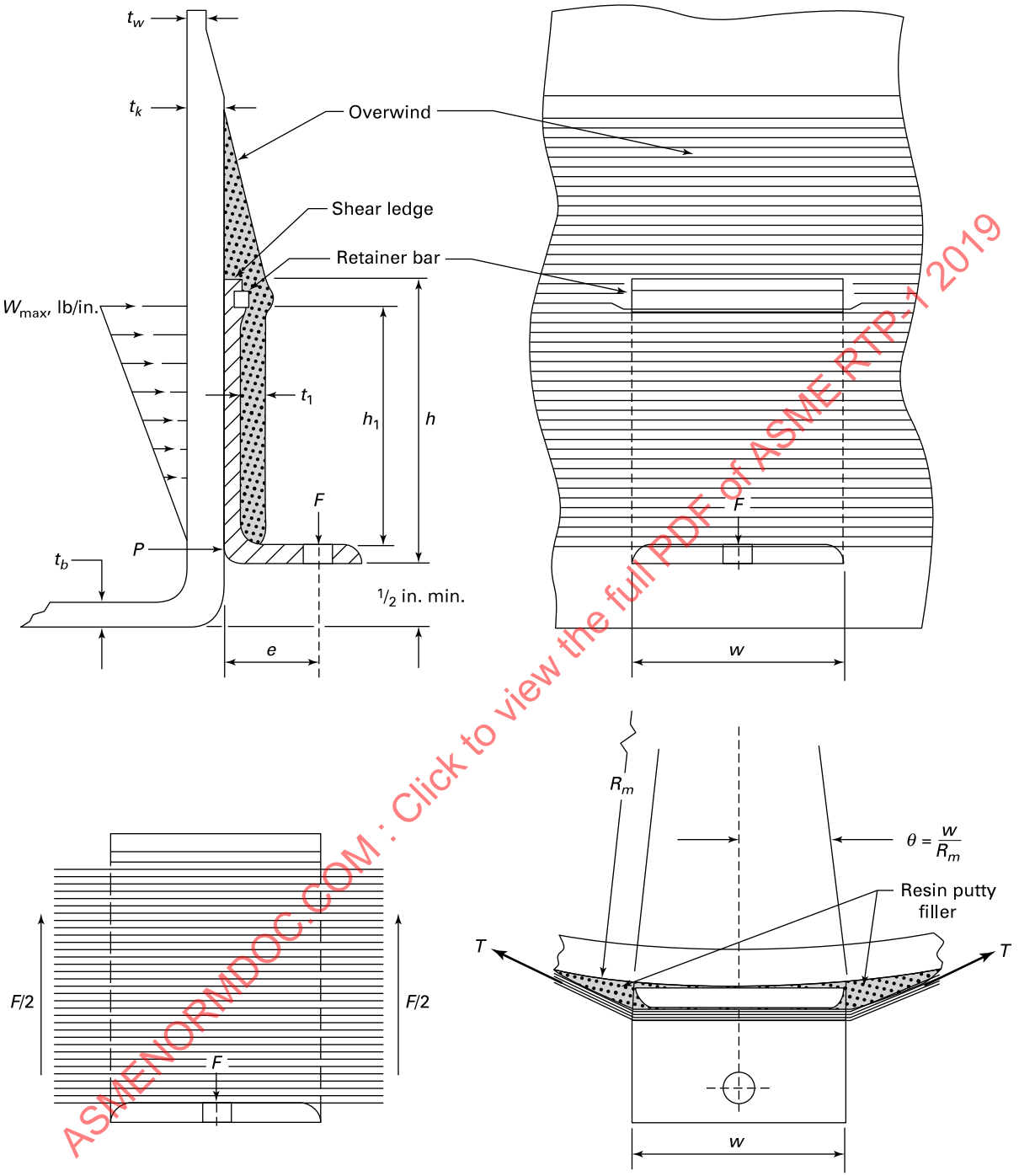

ASMENORMDOC.COM : Click to view the full PDF of ASME RTP-1 2019

Figure NM4-2A Secondary Bonded Hold-Down Lug, Type A

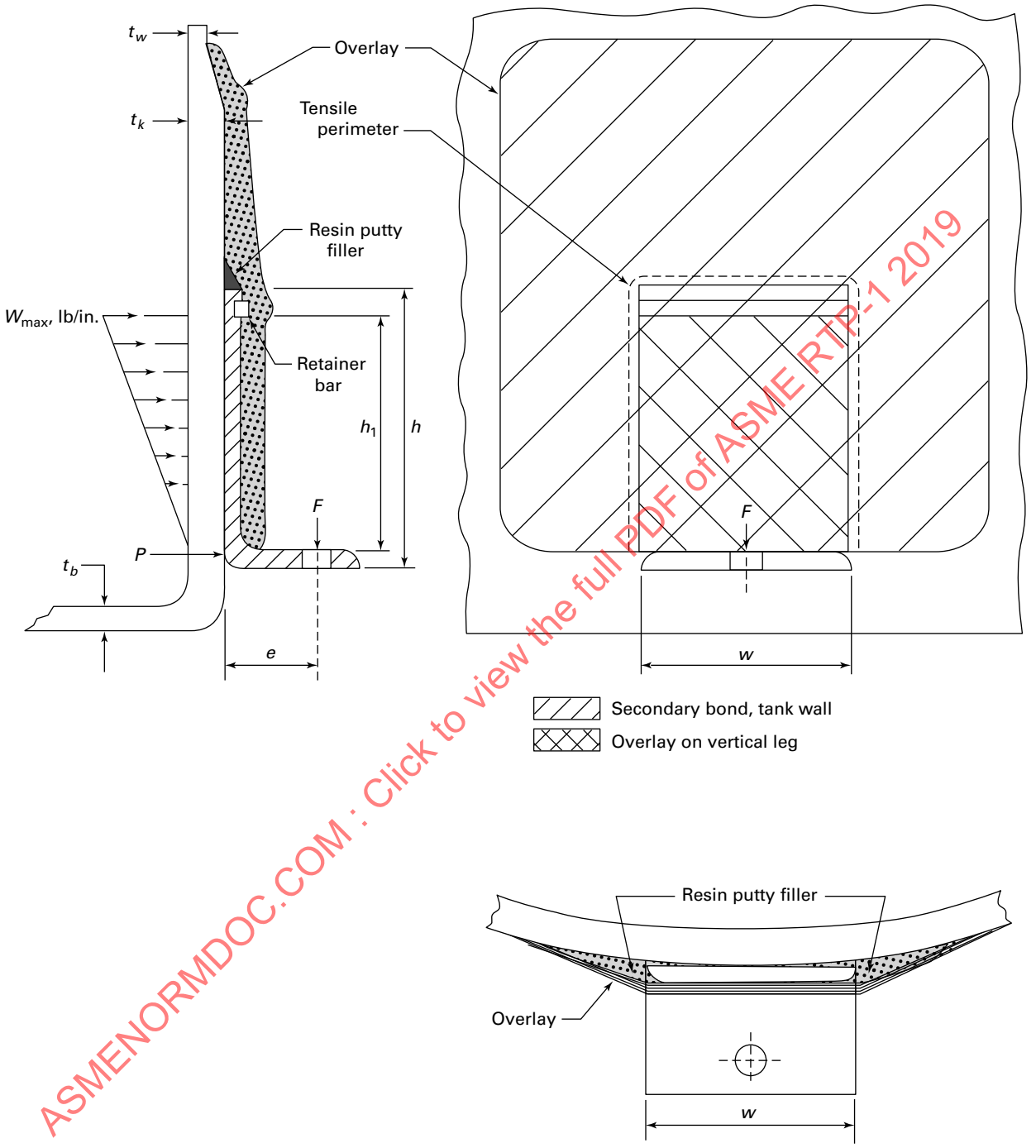

ASMENORMDOC.COM : Click to view the full PDF of ASME RTP-1 2019

Figure NM4-2B Secondary Bonded Hold-Down Lug, Type B

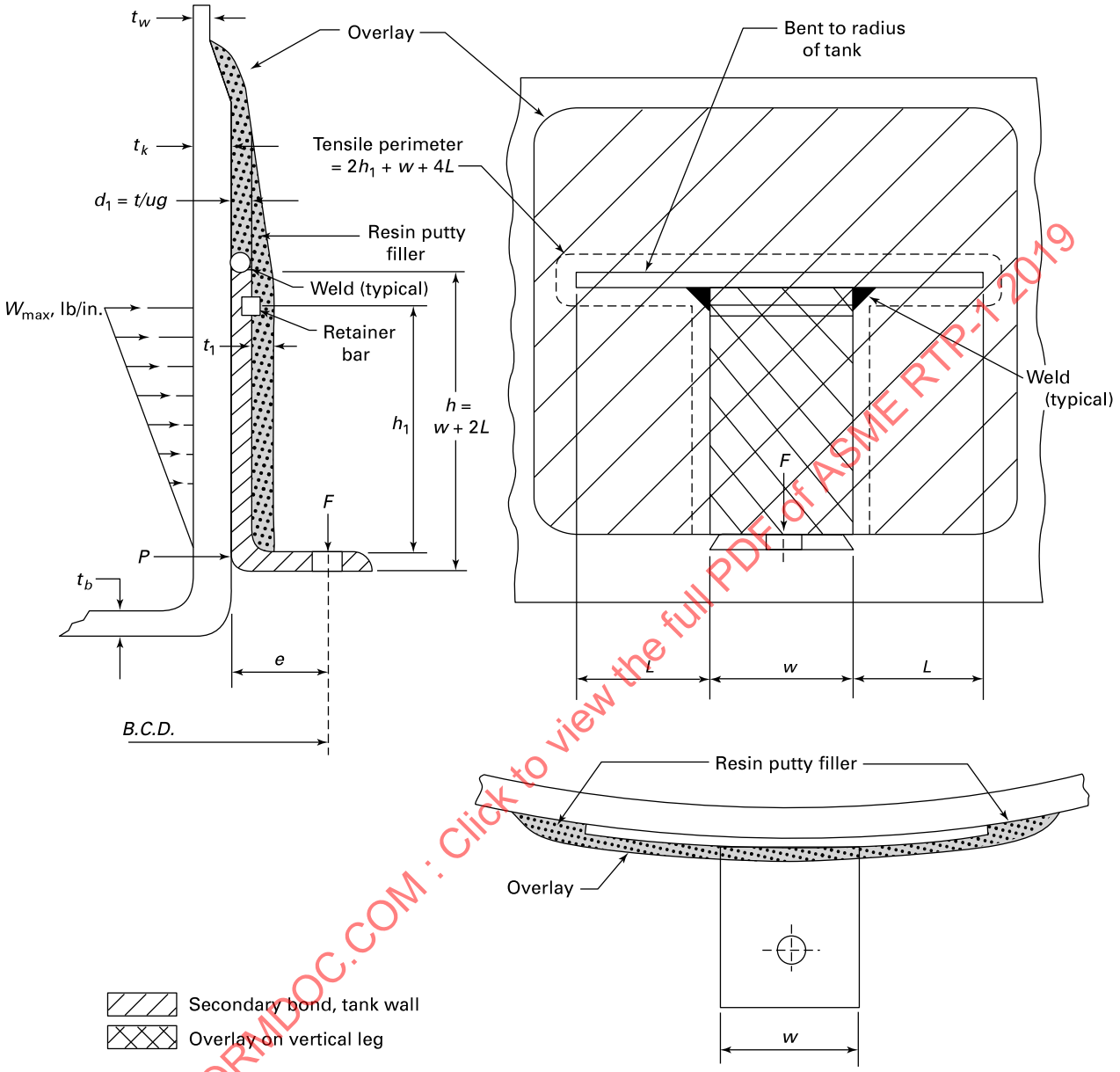

ASMENORMDOC.COM : Click to view the full PDF of ASME RTP-1 2019

Figure NM4-3 Moment Coefficient, M_L

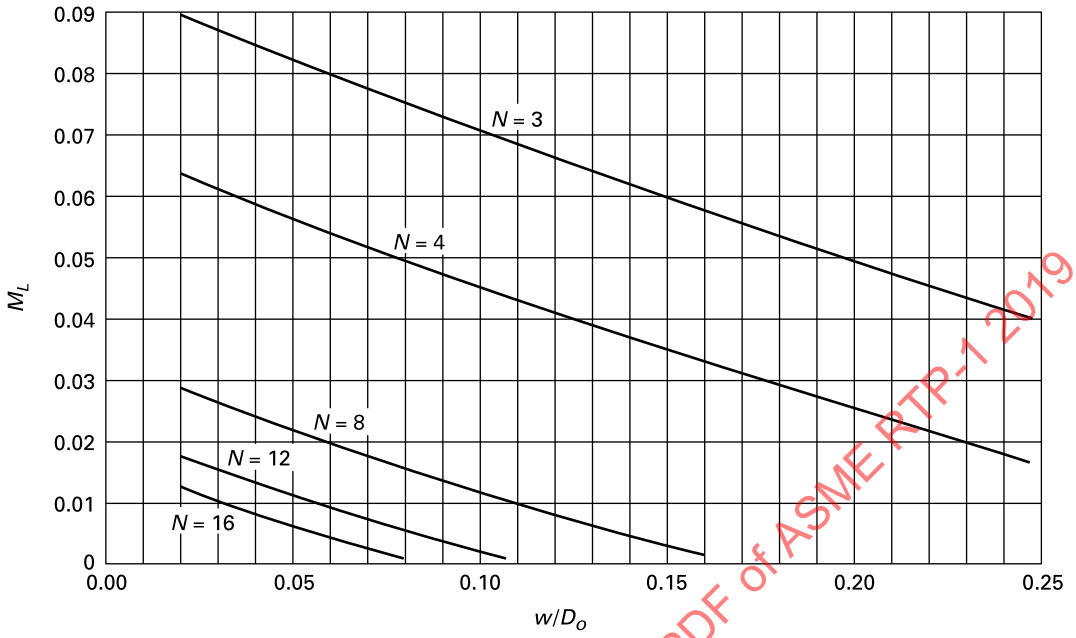

$$M_L = \frac{1}{2}\left[\frac{N}{2}\left(\frac{\cos\theta + \theta\sin\theta}{\pi}\right) - \left(\frac{\sin\theta}{2}\right) - \left(\frac{1}{2}\cot\frac{\pi}{N}\right)\right]$$

N = number of lugs

θ = angle of w/D_o expressed in radians

Figure NM4-4 Uplift Coefficient, P_G

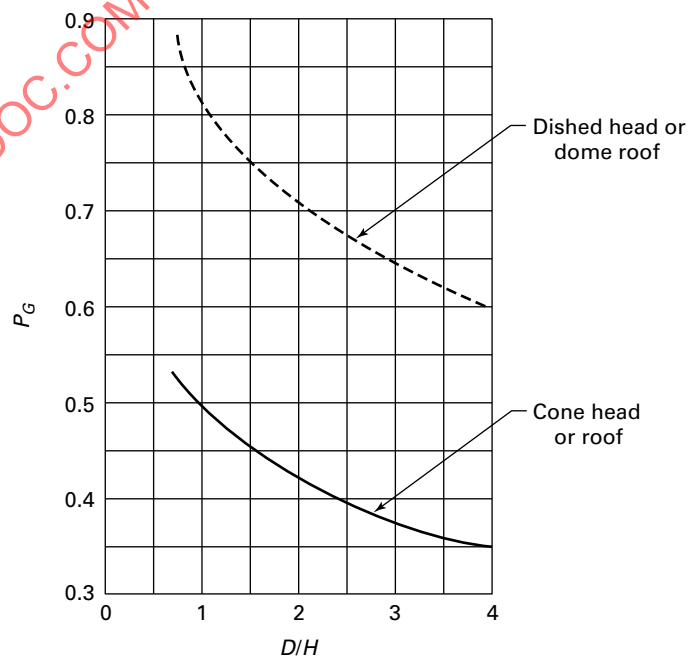

ASMENORMDOC.COM : Click to view the full PDF of ASME RTP-1 2019

Figure NM4-5 Recommended Hold-Down Clip

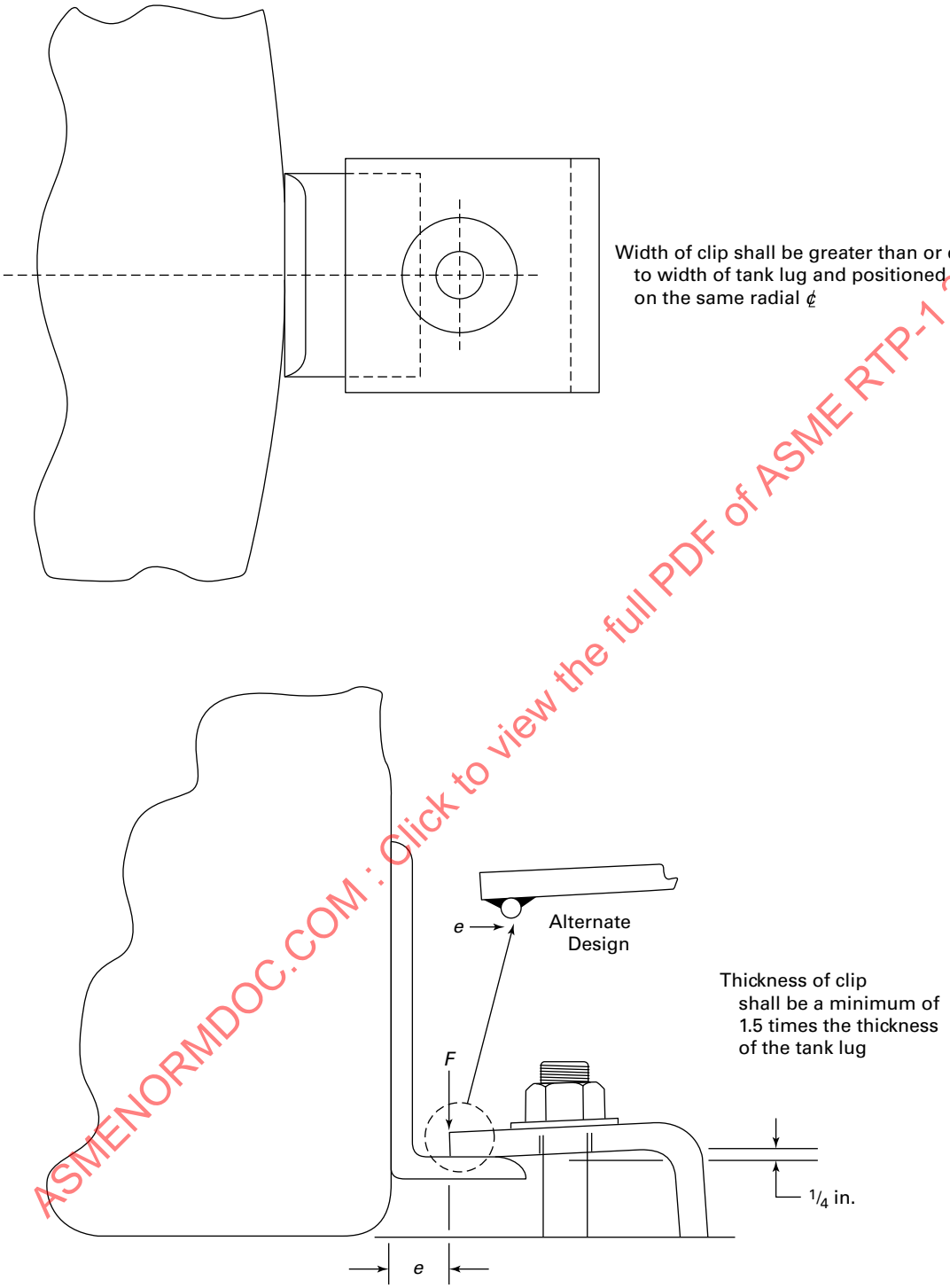

ASMENORMDOC.COM : Click to view the full PDF of ASME RTP-1 2019

(e) Bending Moments Due to Lug

$$M_{ax} = P^*/4\beta, \text{ in.-lb/in.}$$

$$M_{hp} \cong \nu M_{ax}, \text{ in.-lb/in.}$$

(f) Loads Due to Pressure, p

$$N_{ax} = pR_m/2, \text{ lb/in.}$$

$$N_{hp} = pR_m, \text{ lb/in.}$$

(g) Combined Stresses

$$\sigma_{ax} = N_{ax}/t_k \pm 6M_{ax}/t_k^2$$

$$\sigma_{hp} = N_{hp}/t_k \pm 6M_{hp}/t_k^2$$

(1) Allowable stresses for intermittent loading
σ_{ax} = 0.002 × axial tensile modulus
σ_{hp} = 0.002 × hoop tensile modulus
(2) For continuous loading
σ_{ax} = 0.001 × axial tensile modulus
σ_{hp} = 0.001 × hoop tensile modulus

NM4-500 EXAMPLES

NM4-510 Wound Lug Example

12 ft × 24 ft straight height
specific gravity = 1.2
hydro head = (24)(0.433)(1.2) = 12.5 psig
Lower course

$$t_w = PD_i/2S_a = (12.5)(144)/(2)(1{,}500) = 0.60 \text{ in.}$$

Use 0.64 in. nominal.
t_b = 0.37 in.
t_k = 0.64 + 0.37 = 1.01; use 1.00 in.
Approximate vessel weight as follows:
top head = 275 lb
shell = 3,500 lb
bottom = 340 lb
total vessel = 4,115 lb

Calculate wind uplift on roof of vessel.

$$U = A_t(P_G G)$$

where
A_t = plan area of vessel top, ft^2
G = wind pressure = 25 psf
P_G = uplift coefficient
U = $(\pi/4)(D^2)(0.88)(25)$ = 2,488 lb uplift

Calculate the wind overturning moment.

$$\begin{aligned} M_Q &= 0.5S_f GDH^2 + 0.25GDH_D(H + H_D/3) \\ &= (0.5)(0.7)(25)(12)(24)^2 \\ &\quad +(0.25)(25)(12)(2)(24 + {}^2/_3) \\ &= 60{,}480 + 3{,}700 \\ &= 64{,}180 \text{ ft-lb} \end{aligned}$$

Net uplift is

$$\begin{aligned} U_{net} &= U - W + 4M_Q/D \\ &= 2{,}488 - 4{,}115 + (4)(64{,}180)/12 = 19{,}766 \text{ lb} \end{aligned}$$

Assume eight lugs. Then load per lug is

$$F = 19{,}766/8 = 2{,}471 \text{ lb/lug}$$

Assume lug configuration. Assume a 12-in. high angle with a 4-in. projection and 6-in. width. Assume the load eccentricity e = 2½ in. from the vessel wall to the centerline of the anchor bolt or to the point of load application by a hold-down clip.

The lug must be checked for simple bending, which will establish its minimum thickness.

M = bending moment
= Fe = (2,471)(2.5) = 6,177.5 in.-lb
M/Z = bending stress
S = allowable bending = 20,000 psi
Z = section modulus = $bd^2/6 = wt^2_{\text{lug}}/6$
w = 6 in.
$Z_{\min}$ = minimum required section modulus
= M/S = 6,177.5/20,000 = 0.309 in.^{3}
t_{lug} = $(6Z_{\min}/w)^{1/2} = [(6)(0.3009)/6]^{1/2} = 0.55$ in.

Use ⅝ in. thick lug.
Unit radial load on overwrap

$$\begin{aligned} W_{\max} &= 3Fe/h^2 \\ &= 3(2{,}471)(2.5)/(12)^2 = 129 \text{ lb/in.} \end{aligned}$$

Radial load due to moment

$$\begin{aligned} P &= W_{\max}h/2 \\ &= (129)(12)/2 = 774 \text{ lb} \end{aligned}$$

Hoop overwind load

$$\begin{aligned} T_{tot} &= PR_m/w \\ &= (774)(72)/6 = 9{,}288 \text{ lb} \end{aligned}$$

Assume overwrap thickness t_1 = 0.38 in. Hoop overwind tensile stress is

$$\sigma = t/h_1t_1 = 9{,}288/(11)(0.38) = 2{,}222 \text{ psi}$$

$$< 40{,}000/5 = 8{,}000 \text{ psi allowable (OK)}$$

Shear across vessel wall

ASMENORMDOC.COM : Click to view the full PDF of ASME RTP-1 2019

$$\tau_w = P/t_k w = 774/(1.00)(6) = 129 \text{ psi}$$
$$< 3{,}000/2 = 1{,}500 \text{ psi allowable (OK)}$$

Coefficient of bending in the vessel wall

$$\beta = 1.28/(R_m t_k)^{1/2} = 1.28/[(72)(1.00)]^{1/2} = 0.151 \text{ in.}^{-1}$$

Unit radial loading is

$$P^* = P/w = 774/6 = 129 \text{lb/in.}$$

Axial and hoop bending loads

$$M_{ax} = P^*/4\beta = 129/(4)(0.151) = 213.6 \text{ in.-lb/in.}$$

$$M_{hp} \cong \nu M_{ax} = (0.3)(213.6) = 64 \text{ in. -lb/in.}$$

Axial load due to pressure

$$N_{ax} = pR_m/2$$

However, $p = 0$ for no pressure above the liquid (atmospheric vessel). Therefore, $N_{ax} = 0$.

Hoop load due to pressure

$$N_{hp} = pR_m$$

where

p = 12.5 psig hydrostatic (hoop direction)

$$N_{hp} = (12.5)(72) = 900 \text{ lb/in.}$$

Axial and hoop stresses

$$\begin{aligned}\sigma_{ax} &= N_{ax}/t_k + 6M_{ax}/t_k^2 \\ &= 0 + (6)(213.6)/(100)^2 = 1{,}281.6 \text{ psi}\end{aligned}$$

$$\begin{aligned}\sigma_{hp} &= N_{hp}/t_k + 6M_{hp}/t_k^2 \\ &= 900/1.00 + (6)(64)/(1.00)^2 = 1{,}284 \text{ psi}\end{aligned}$$

NM4-520 Secondary Bonded Lug Example

Using the same example problem as in para. NM4-510, assume a lug attached by secondary bonding is elected for use.

Again assume eight lugs with an uplift load of 2,471 lb/lug × 8 = 19,768 lb total.

Assume the same lug geometry as before, and check the required minimum lug height. Lug width to vessel diameter ratio w/D_o = 6/145.6 = 0.041. From Figure NM4-3, assuming eight lugs, M_L = 0.024.

$$\begin{aligned}h &= \left[\frac{6D_o W e M_L}{N S_a t_k^2}\right]^{1/2} \\ &= \left[\frac{(6)(145.6)(19{,}768)(2.5)(0.024)}{(8)(1{,}500)(1.0)^2}\right]^{1/2} \\ &= 9.28 \text{ in. (min.)}\end{aligned}$$

For simplicity and to permit comparison, again use 12 in. high lug, 6 in. wide.

As before, check the lug for simple bending to establish its minimum thickness.

Unit radial load on overwrap

$$W_{\max} = 3Fe/h^2 = (3)(2{,}471)(2.5)/(12)^2 = 129 \text{ lb/in.}$$

Total radial load due to lug moment

$$P = W_{\max} h/2 = (129)(12)/2 = 774 \text{ lb}$$

Next calculate the tensile perimeter

$$2h_1 + w = (2)(11) + 6 = 28 \text{ in.}$$

The tensile perimeter load = P/tensile perimeter = 774/28 = 27.6 lb/in. < 50 lb/in.

The minimum required area of secondary RTP bond overlay on the vessel wall, or the area of overlay on the upstanding leg of the lug below the retainer bar required for shear, shall be not less than

$$A_R = W/200N = 19{,}768/(200)(8) = 12.4 \text{ in.}^2\text{/lug}$$

Proceeding as before, the overlay hoop load is

$$T_{tot} = PR_m/w = (774)(72)/6 = 9{,}288 \text{ lb}$$

The overlay hoop tensile stress, assuming overlay thickness t_1 = 0.38 in., is

$$\begin{aligned}\sigma &= T_{tot}/h_1 t_1 = 9{,}288/(11)(0.38) \\ &= 2{,}222 \text{ psi} < 3{,}000 \text{ psi}\end{aligned}$$

Shear across vessel wall

$$\tau_w = P/t_k w = 774/(1.0)(6) = 129 \text{ psi}$$

Coefficient of bending in vessel wall

$$\begin{aligned}\beta &= 1.28/(R_m t_k)^{1/2} = 128/[(72)(1.0)]^{1/2} \\ &= 0.151 \text{ in.}^{-1}\end{aligned}$$

Unit radial loading

$$p^* = P/w = 774/6 = 129 \text{ lb/in.}$$

Bending loads

$$M_{ax} = P^*/4\beta = 129/(4)(0.151) = 213.6 \text{ in.-lb/in.}$$

$$M_{hp} \cong \nu M_{ax} = (0.3)(213.6) = 64 \text{ in.-lb/in.}$$

ASMENORMDOC.COM : Click to view the full PDF of ASME RTP-1 2019

Since the overlay is not a full circumferential winding, all stresses due to internal pressure and/or hydrostatic head are presumed to be taken by the vessel shell itself. Thus, the bending stresses in the overwrap are due only to the bending loads introduced by the lug.

Bending stresses

$$\sigma_{ax} = 6M_{ax}/t_1^2 = (6)(213.6)/(0.38)^2 = 8,\ 875\ \text{psi}$$

$$\sigma_{hp} = 6M_{hp}/t_1^2 = (6)(64)/(0.38)^2 = 2{,}659\ \text{psi}$$

Since these stresses are much too high, the thickness of the overwrap must be increased. Try 1.0 in.

$$\sigma_{ax} = 6M_{ax}/t_1^2 = (6)(213.6)/(1.0)^2 = 1{,}281.6\ \text{psi}$$

$$\sigma_{hp} = 6M_{hp}/t_1^2 = (6)(64)/(1.0)^2 = 384\ \text{psi}$$

If we set a stress limit of S_a for loads due to uplift, we can solve directly for the overlay thickness t_1. Use the greater of

$$t_{1\min} = \sqrt{6M_{ax}/S_a}$$

or

$$t_{1\min} = \sqrt{6M_{hp}/S_a}$$

It can thus be seen that the required overlay thickness is approximately equal to the vessel wall at the bottom knuckle region. The use of more hold-down lugs would reduce the load per lug. This may not be cost effective, however, since more anchor bolts are required.

ASMENORMDOC.COM : Click to view the full PDF of ASME RTP-1 2019

NONMANDATORY APPENDIX NM-5 RING SUPPORT OF VESSELS

NM5-100 SCOPE

This Appendix provides methods for the design and checking of metallic support rings for vertical vessels. It is recommended that continuous loads be handled by metallic bands or double rings. These procedures cover lugs attached to thin bands and double rings.

The band is proportioned to fully resist the bending moments applied by the support lugs. No credit is taken for the buckling strength of the RTP shell, a conservative assumption.

NM5-200 BAND WITH LUGS

The thin band design utilizes a band height that is two times the height of the lug for dissipation of the stresses induced by the reaction of the lug (see Figure NM5-1).

NM5-210 Nomenclature

b = spacing between lug gussets, in.
D = outside diameter of vessel, in.
d = lug projection, in.
E = load eccentricity, in.
h_L = height of lug, in.
M_L = moment coefficient at lug, dimensionless (see Figure NM5-2)
N = number of lugs
S = allowable stress of band, psi[1]
S_{ae} = allowable stress of lug, psi[1]
S_r = allowable stress of rings or section, psi[1]
S_y = yield stress of ring, psi[1]
t_b = thickness of band, in. (¼ in. minimum)
t_c = thickness of shear collar, in.
t_g = thickness of lug gusset or bearing plate, in.
W = maximum supported vessel weight, lb (larger of operating or hydrotest weight)
Z_r = required section modulus of radial rings, in.^{3}

NM5-220 Design Procedure

Assume a band thickness. The following band thicknesses are recommended as a starting point (based on specific gravity of 1.0). Vessels with a height-to-diameter ratio greater than 1.25 will require a band thickness greater than the following:

Diameter, in.	Band Thickness, in.
Less than 48	¼
49 to 60	⅜
61 to 84	½
85 to 96	⅝
97 to 120	¾

Determine the required height of the lug based on the following:

$$h_L = \left[\frac{6DWEM_L}{SNt_b^2}\right]^{1/2} \tag{1}$$

If the lug height becomes unreasonable, e.g., greater than about 12 in. high, or the required band thickness becomes excessive, a double ring or rolled structural channel should be considered (see para. NM5-300).

NM5-230 Split-Ring Flanges

Bands may be split and flanged for ease of assembly around the vessel, or where corrosion of support elements may require their replacement. End flanges at the split must be bolted face to face without inducing stress in the FRP shell. Flanges must be designed to develop the full structural capacity of the ring (see para. NM5-500 and Figure NM5-3).

NM5-240 Thickness of Gussets and Baseplate

The required minimum thicknesses of the gussets and baseplate shall be not less than the largest of the following:

(a) Shear

$$t_g = 0.625W/h_L S_{ae} N \tag{2}$$

(b) Bending

$$t_g = 2WE/NS_{ae}h_L^2 \tag{3}$$

(c) Compression

$$t_g = 0.5W/dS_{ae}N \tag{4}$$

(d) Lateral Stability

$$t_g = d/16 \tag{5}$$

[1] All stress values per ASME Boiler and Pressure Vessel Code, Section II, Part D.

ASMENORMDOC.COM : Click to view the full PDF of ASME RTP-1 2019

t_g shall be a minimum of ¼ in., excluding corrosion allowance.

$$M_L = \frac{1}{2}\left[\frac{N}{2}\left(\frac{\cos\theta + \theta\sin\theta}{\pi}\right) - \left(\frac{\sin\theta}{2}\right) - \left(\frac{1}{2}\cot\frac{\pi}{N}\right)\right]$$

N = number of lugs

θ = angle of b/D expressed in radians

The minimum leg size of the continuous fillet welds attaching the gussets and base to the band shall equal $1.4t_g$.

NM5-250 Shear Collar

Shear collar height shown in Figure NM5-1 is minimum. Actual shear and compressive stresses shall be calculated. Shear collar heights and thicknesses shall be compared to minimums shown and increased as necessary.

NM5-300 DOUBLE-RING SUPPORT

Double-ring supports are a method of providing supports of reasonable proportions where the loads and/or lug eccentricities are large. The support is comprised of a channel fabricated of two continuous rings or a rolled structural channel (see Figure NM5-4). This support ring is proportioned to resist all bending and torsional loads without introducing any significant local loads into the FRP shell.

This paragraph provides a method for checking the stress in a support ring of a vertical vessel. The procedure is limited to thin ring beams with three or more evenly spaced lugs. Thin rings are those whose thickness in the radial direction is less than one-tenth their radius.

Double rings support the vessel by means of a shear collar.

NM5-310 Nomenclature

b = spacing between lug gussets, in.
D = outside diameter of vessel, in.
d = radial projection of ring or channel from web or band, in.
E = load eccentricity from centerline web to centerline anchor bolt, in.
e = eccentricity of support reaction force, in. (see Figure NM5-4)
e^* = location of center of torsional shear from centerline of web or band, in.
h = height of ring section, in.
h_b = height of band, in.
= $h + 1$
I = moment of inertia of ring section about a centroid axis in the plane of the ring, in.^{4}
J = torsional stiffness constant of ring section, in.^{4}
M_b = bending moment at a section of ring, in.-lb
M_L = moment coefficient at lugs, dimensionless
M_t = twisting moment at a section of ring, in.-lb
N = number of lugs
R = inside radius of double-ring support, in.
S_r = allowable stress of ring or section, psi ERROR: footnote: fn45, no xref present
t_b = thickness of band, in. (¼ in. minimum)
t_c = thickness of shear collar, in.
t_g = thickness of gusset, in.
t_r = thickness of ring, in.
t_w = thickness of web, in.
W = total load supported by ring, lb
Z_b = bending section modulus, in.^{3}
Z_r = required section modulus of each ring, in.^{3}
Z_t = torsional section modulus, in.^{3}
α = angle defined in Figure NM5-5, rad
$\bar{\sigma}$ = normalized stress, dimensionless
σ_b = bending stress, psi
σ_{vm} = Von-Mises stress defined below, psi
τ = torsional stress, psi
ϕ = angle defined in Figure NM5-5, rad

NM5-320 Design Procedure for Double Rings on a Band

A double-ring support may be fabricated by adding two rings to a steel band. The vessel is supported by a shear collar, in this case bearing on the top of the steel support band [see Figure NM5-4, sketch (a)].

Step 1: Assume a desired ring height and gusset spacing. Since the vessel diameter, support eccentricity, weight, and desired number of support points are known, an approximate section modulus for the ring can be calculated

$$Z_r = \frac{DWeM_L}{NhS_r} \tag{6}$$

This is the estimated minimum section modulus for each of two rings mounted on a steel band. The resulting double ring must be checked for bending and torsional stresses as follows.

Step 2: Determine the location of the center of shear, e^*. This must be added to the projection of the lug, E, from the centerline of the bolt hole to the centerline of the web to obtain the total eccentricity, e, for the double-ring support.

For double rings on a band [see Figure NM5-4, sketch (a)]

$$e^* = \frac{d^2(h - t_r)^2 t_r}{4I} \tag{7}$$

$$e = e^* + E$$

Step 3: Determine the ratio e/R.

Step 4: Calculate Z_b. For double rings on a band [see Figure NM5-4, sketch (a)]

ASMENORMDOC.COM : Click to view the full PDF of ASME RTP-1 2019

Figure NM5-1 Lugs on Band

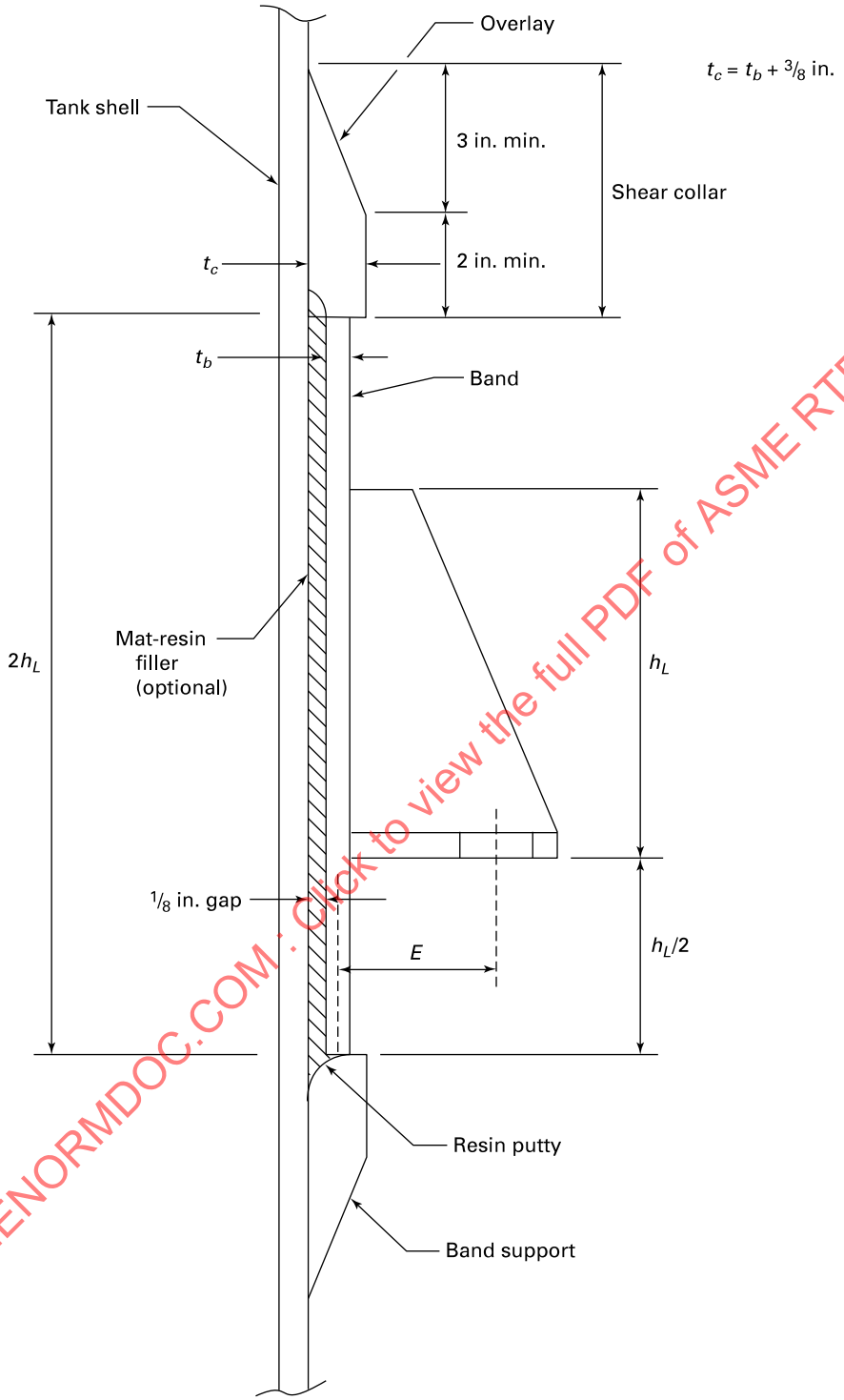

ASMENORMDOC.COM : Click to view the full PDF of ASME RTP-1 2019

Figure NM5-2 Moment Coefficient, M_L

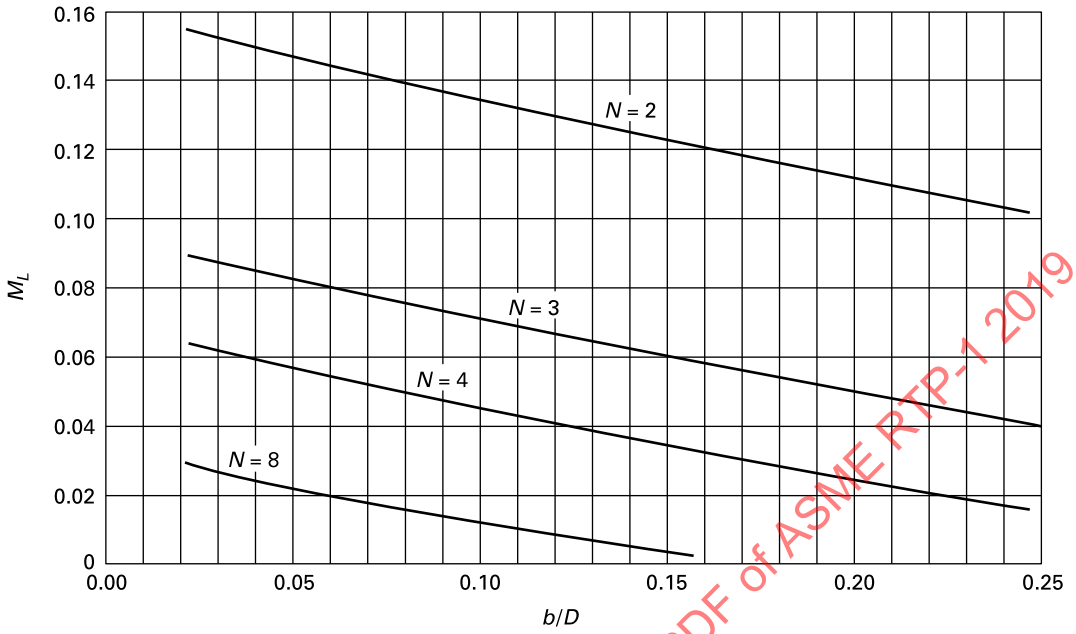

$$M_L = \frac{1}{2}\left[\frac{N}{2}\left(\frac{\cos\theta + \theta\sin\theta}{\pi}\right) - \left(\frac{\sin\theta}{2}\right) - \left(\frac{1}{2}\cot\frac{\pi}{N}\right)\right]$$

N = number of lugs

θ = angle of b/D expressed in radians

$$Z_b = \frac{t_b\left(h_b^3\right) + d\left[h^3 - (h - 2t_r)^3\right]}{6h_b} \tag{8}$$

Step 5: For double rings on a band per Figure NM5-4, sketch (a)

$$J = \frac{t_r^3(2d)}{3} + \frac{t_b^3(h_b)}{3} \tag{9}$$

Step 6: Calculate Z_t

$$Z_t = J/t_b$$

Step 7: Calculate the ratio Z_b/Z_t.

Step 8: Use Figures NM5-6 through NM5-8 for the applicable number of support points and determine $\bar{\sigma}$.

Step 9: From this, calculate the maximum combined stress due to bending and torsion, the Von-Mises stress

$$\sigma_{vm} = WR\bar{\sigma}/Z_b \tag{10}$$

Step 10: Check gusset thickness per para. NM5-240.

NM5-400 DESIGN PROCEDURE FOR A FABRICATED OR ROLLED STRUCTURAL CHANNEL DOUBLE-RING SUPPORT

A double-ring support can also be in the form of a fabricated or rolled structural channel.

With a rolled structural channel, the shear collar of the vessel rests directly on the top flange [see Figure NM5-4, sketch (b)].

NM5-410 Stress in Ring

The bending and twisting moments at a point A (see Figure NM5-5) in the ring are given by

$$M_b = \frac{-WR}{2\pi}\left[\frac{\phi\cos\alpha}{\sin\phi} - 1 - \frac{\phi e}{R}\sin(\phi - \alpha)\right] \tag{11}$$

$$M_t = \frac{WR}{2\pi}\left[\frac{\phi\sin\alpha}{\sin\phi} - \alpha - \frac{\phi e}{R}\cos(\phi - \alpha)\right] \tag{12}$$

where

$\phi = \pi/N$

The bending stress is then given by

ASMENORMDOC.COM : Click to view the full PDF of ASME RTP-1 2019

Figure NM5-3 Split-Ring Flange

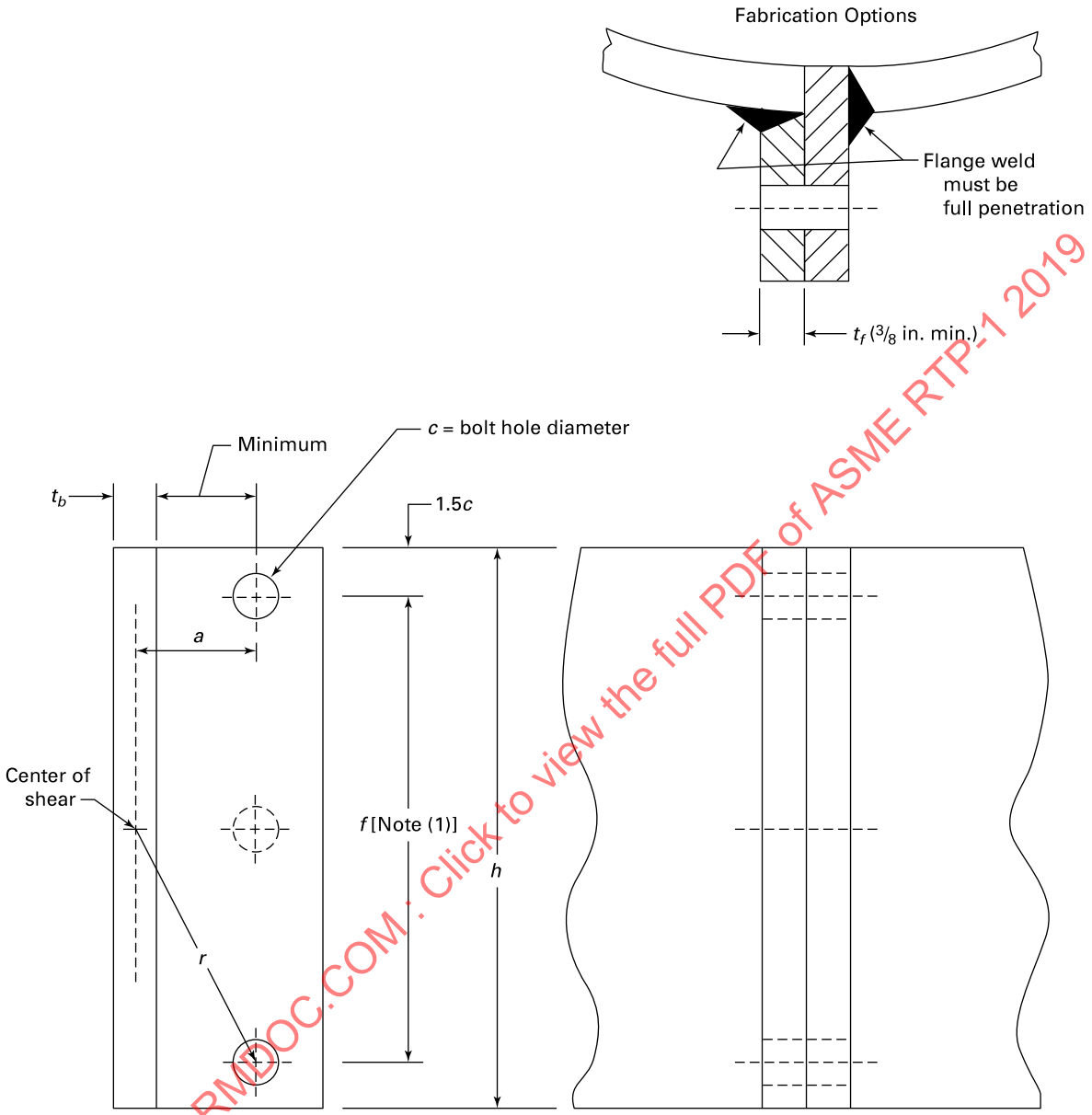

NOTE: (1) If f exceeds 8 in., add an additional bolt at midspan to stabilize the flange. Do not include in Nb, number of bolts.

ASMENORMDOC.COM : Click to view the full PDF of ASME RTP-1 2019

Figure NM5-4 Ring Support of Vessels

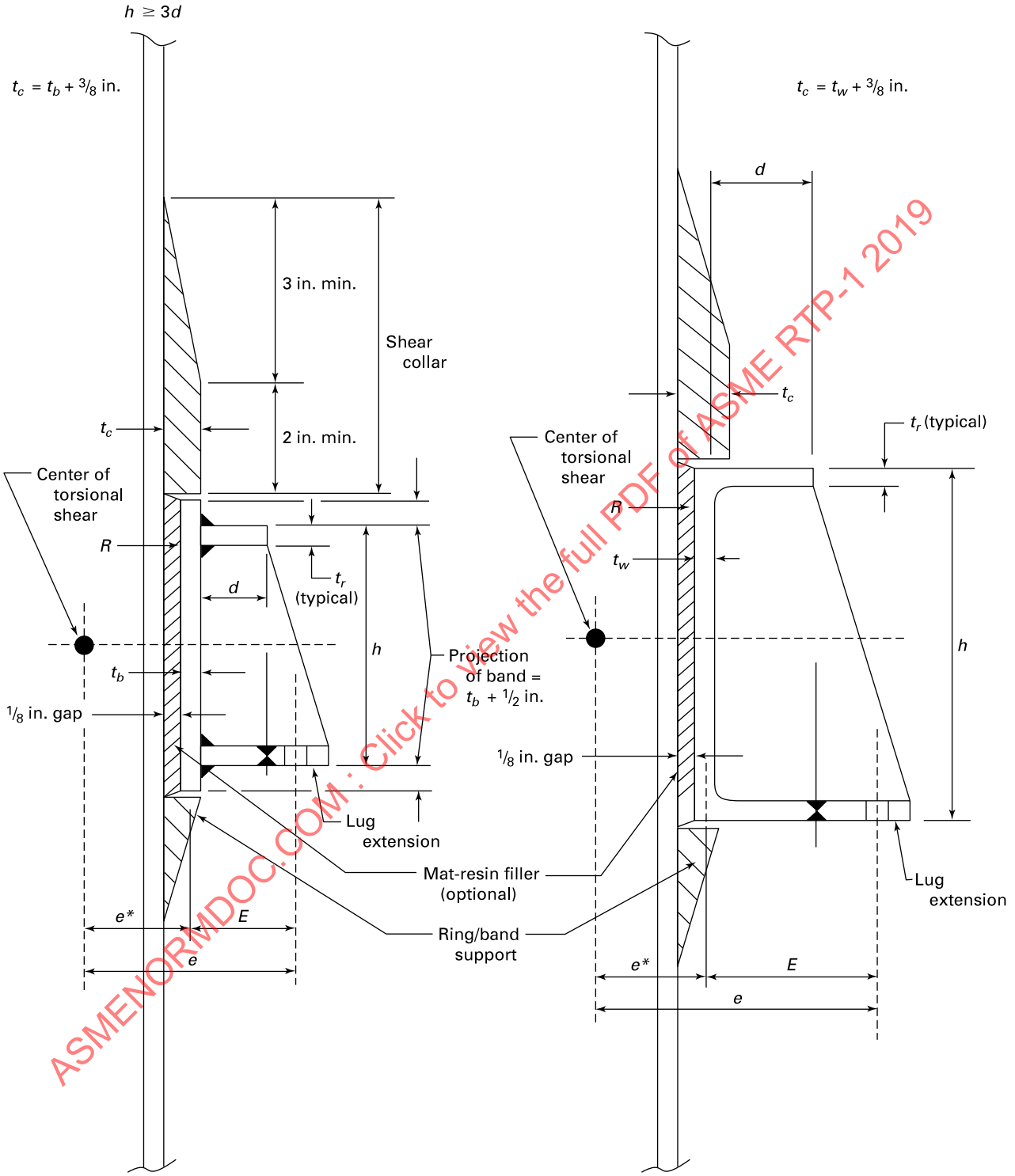

(a) Double Rings on a Band

(b) Rolled Structural Ring Without Band

ASMENORMDOC.COM : Click to view the full PDF of ASME RTP-1 2019

Figure NM5-5 Geometric Quantities

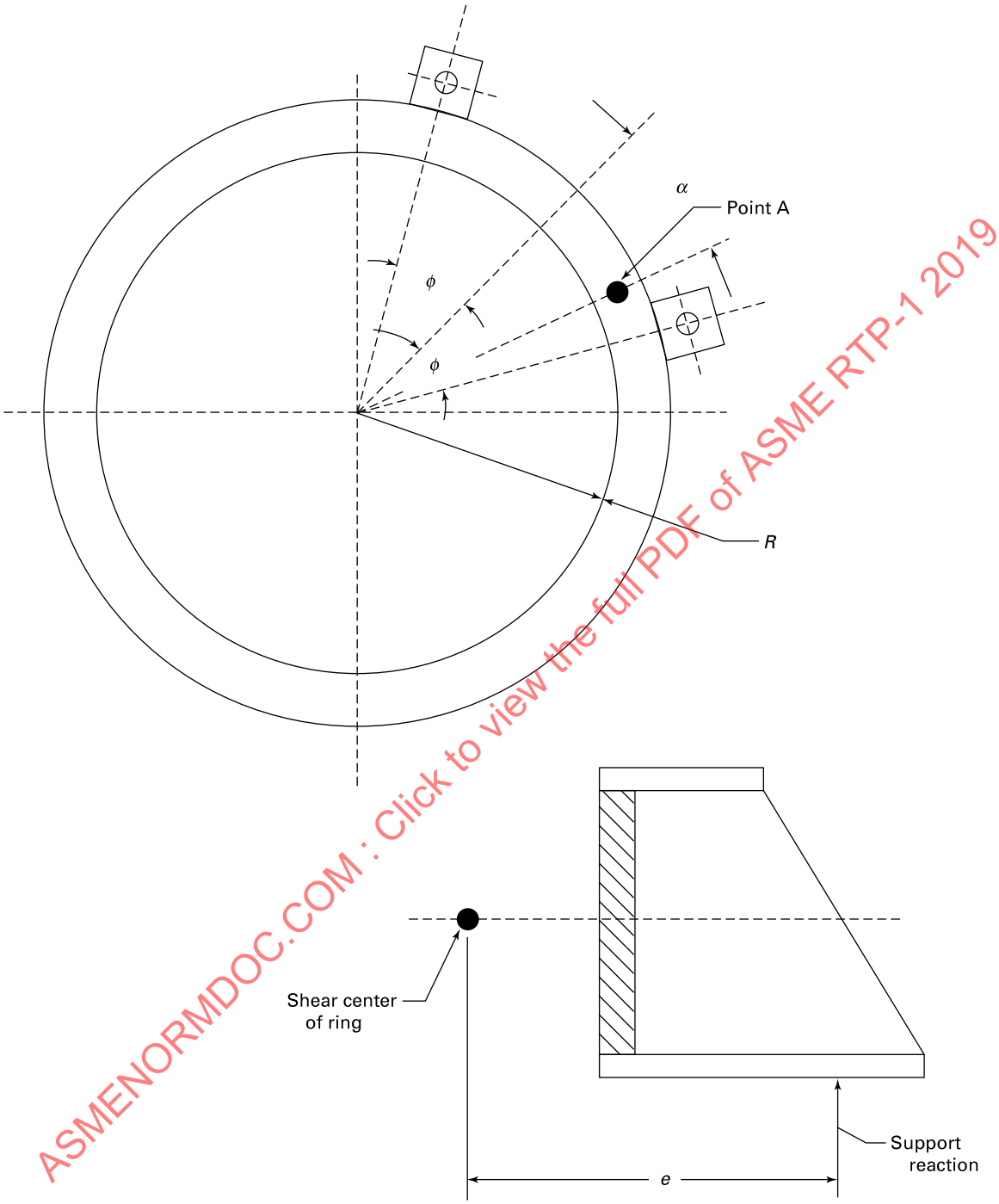

ASMENORMDOC.COM : Click to view the full PDF of ASME RTP-1 2019

$$\sigma_b = M_b/Z_b \tag{13}$$

and the torsional stress by

$$\tau = M_t/Z_t \tag{14}$$

They can be combined in the Von-Mises stress

$$\sigma_{vm} = \left(\sigma_b^2 + 3\tau^2\right)^{1/2} \tag{15}$$

The Von-Mises stress intensity must be no greater than the allowable stress intensity at every point on the ring.

To use eqs. (11) through (15) to check the ring design, it is necessary to calculate σ_{vm} at a number of locations (values of α) to be sure that the maximum stress has been considered. Depending on the relative values of E, R, and the ring section, the maximum may occur at any location.

NM5-420 Design Charts

Paragraph NM5-410 provides a basis for a computer procedure for ring design, but is tedious to use for hand computation. A set of charts that are derived from the equations in para. NM5-410 and cover most cases of interest is provided (see Figures NM5-6 through NM5-8).

Procedure. Use the procedure of para. NM5-320, substituting h for h_b.

NM5-430 Section Proportions

Rings are often built from plate and welded together so that the cross sections are not standard structural shapes. It is important that nonstandard shapes be elastically stable under loadings that paras. NM5-410 or NM5-420 allow. For this reason, the section proportions should satisfy section 1.5.1.4 of the AISC Specification.[2]

NM5-500 SPLIT-RING CONSTRUCTION

In many cases, rings are fabricated in two semicircular parts that are bolted around the vessel; thus, there will be splices in the ring. These splices must be strong enough to develop the full strength of the ring in both bending and twisting.

NM5-510 Nomenclature

A_b = area of one bolt, in.^{2}
a = radial distance from band to bolt hole, in. (see Figure NM5-3)
b = effective width of flange, in.
= $3c$
c = bolt hole diameter, in.
e = eccentricity or lug reaction force, in.
f = vertical distance between bolts, in.
M_b = moment in ring due to bending, in.-lb
M_f = moment on flange due to bolt load, in.-lb
M_t = moment in ring due to torsion, in.-lb
N_b = number of bolts = 2 (see Figure NM5-3)
r = distance from ring center of shear to bolt hole (see Figure NM5-3)
S_a = allowable stress, psi
t_f = thickness of flange, in.
Z_{min} = minimum section modulus of effective width of flange, in.^{3}

NM5-520 Design Procedure

Equations (11) and (12) of para. NM5-410 provide the bending and torsional moments for any point on the ring. On the basis of duplicate ring sections and simplified design, it is recommended that splice flanges be located midway between support points.

When splice flanges are located midway between the support points, the above-referenced equations are reduced to the following simplified formulas:

For four support points

$$M_b = W(-0.0176R + 0.0884e) \tag{16}$$

$$M_t = 0.0884We \tag{17}$$

For eight support points

$$M_b = W(-0.00417R + 0.0239e) \tag{18}$$

$$M_t = 0.0557We \tag{19}$$

NM5-521 Procedure

Step 1: Determine the maximum bending and torsional moments in the ring at the location of the flanged split.

Step 2: Develop an assumed flange configuration (see Figure NM5-3).

Step 3: Assume a bolt location.

Step 4: Size the bolts based on bending (tension) or torsion (shear), whichever controls (minimum bolt size shall be $^5/_8$-in. nominal diameter).

Step 5: Calculate the flange thickness based on the bending (tensile) bolt load (calculated as a cantilevered beam of width $3c$ and loaded at the end by the tensile bolt load due to bending of the ring).

NM5-522 Bolt Sizing

(a) Bending

$$\text{bolt load (tensile)} = M_b/f, \text{lb} \tag{20}$$

Bolt stress = (2)(bolt load)/N_bA_b, psi ≤ ASME Boiler and Pressure Vessel Code allowable (Section VIII, Division 1).

(b) Torsion

$$\text{bolt load (shear)} = M_t/r, \text{lb} \tag{21}$$

Bolt stress = bolt load/N_bA_b, psi ≤ 0.5 ASME Boiler and Pressure Vessel Code allowable (Section VIII, Division 1).

(c) Flange thickness on cantilevered flange

ASMENORMDOC.COM : Click to view the full PDF of ASME RTP-1 2019

Figure NM5-6 Ring Design Chart for Three Lugs

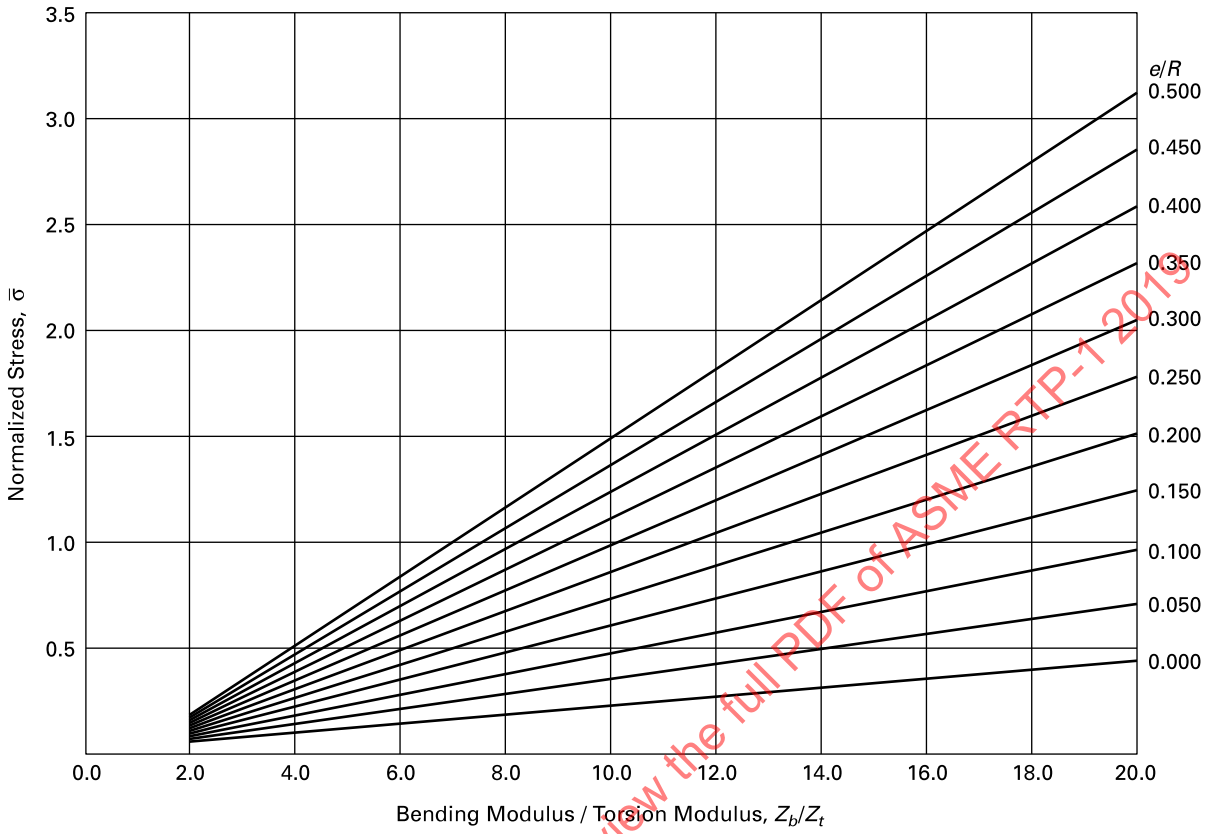

ASMENORMDOC.COM : Click to view the full PDF of ASME RTP-1 2019

$$M_f = \text{bolt load(tensile)} \times a \tag{22}$$

$$Z_{\min} = M_f/S_a \tag{23}$$

$$Z = bt_f^2/6$$

$$b = 3c$$

Therefore

$$t_f(\min) = (2Z_{\min}/c)^{1/2} \geq {}^3/_8\,\text{in.} \tag{24}$$

NM5-530 Welding

All welding shall be continuous. All butt welds shall be full penetration. Welding shall conform to the American Welding Society D1.1 Structural Welding Code.

NM5-600 EXAMPLES

NM5-610 Double-Ring Support

Consider a 10-ft diameter vessel containing 126,000 lb of liquid with eight lugs having an eccentricity of 4.5 in., e = 6.2 in., and a lug projection of 6 in. The candidate cross section is shown in Figure NM5-9. The ring is to be fabricated of steel with an allowable ASME Code stress of 25,000 psi.

Step 1: $N = 8$

Step 2: $e/R = 6.2/61 = 0.1$

Step 3: $Z_b = 58.5$ in.^{3}; $Z_t = 3.94$ in.^{3}; $Z_b/Z_t = 14.8$

Step 4: From the chart for eight lugs, $\sigma = 0.18$

Step 5: Assuming that the vessel itself would weigh 5% as much as the contents, the entire supported weight is 132,400 lb.

$$\begin{aligned}\sigma_{vm} &= WR\bar{\sigma}/Z_b \\ &= (132{,}400)(61)(0.18)/58.5 = 24{,}850\,\text{psi}\end{aligned}$$

Thus, the stress intensity is less than the allowable stress and the section chosen is adequate.

Step 6: Using para. NM5-240, calculate the required minimum gusset thickness. Equation (5) gives the maximum value of $t_g = 6/16 = {}^3/_8$ in.

NM5-620 Band With Lugs

Assume a 10-ft diameter × 10-ft straight-side vessel. Use a specific gravity of 1.2 and a lug load eccentricity, E, of 3 in. Assume eight lugs (see Figure NM5-10). The lower head is

Figure NM5-7 Ring Design Chart for Four Lugs

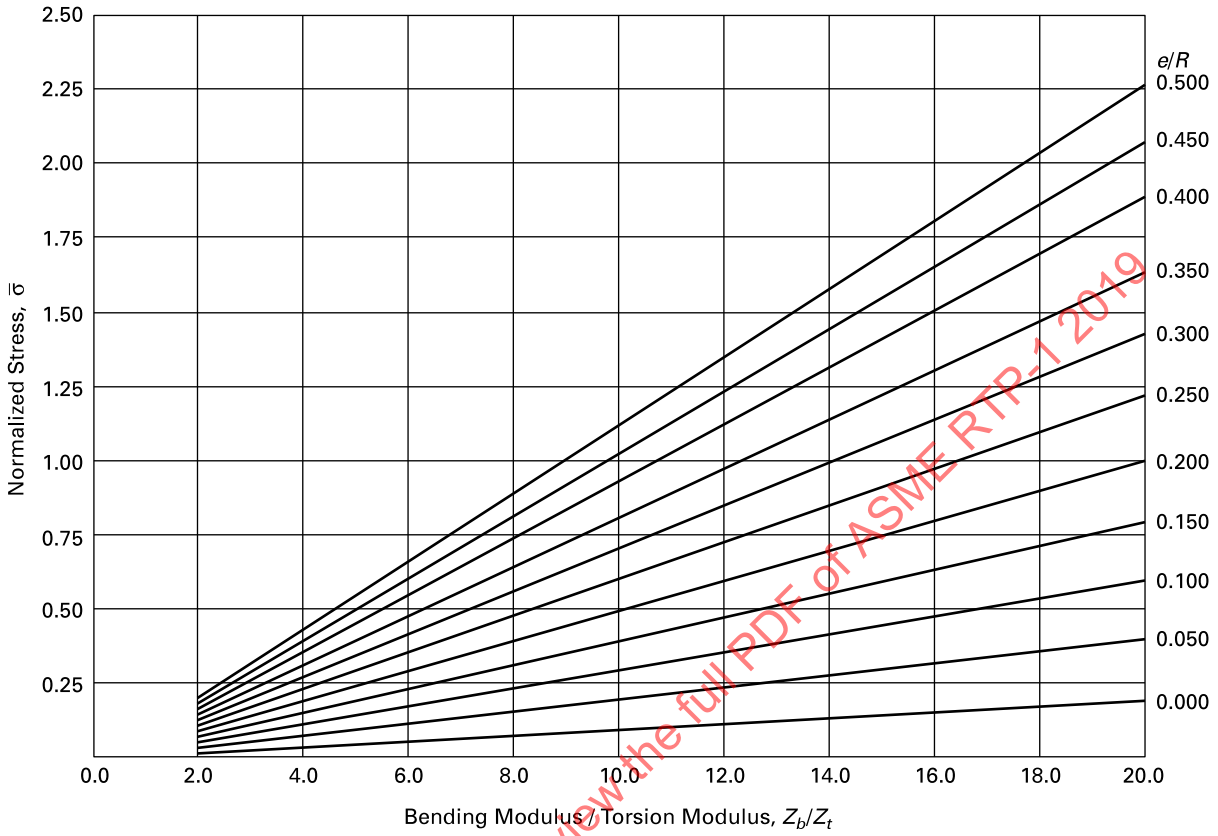

ASMENORMDOC.COM : Click to view the full PDF of ASME RTP-1 2019

ASME flanged and dished. The flooded weight of the vessel is approximately 67,000 lb.

Try a band with lugs, similar to Figure NM5-1. For the 10-ft diameter, the band will be ¾ in. thick.

Calculate the required lug height. Assume b = 6 in. Then b/D = 6/122 = 0.05. M_L = 0.022.

$$h_L = \left(\frac{6DWEM_L}{SNt_b^2}\right)^{1/2}$$

$$= \left[\frac{(6)(122)(67{,}000)(3)(0.022)}{(12{,}700)(8)(0.75)^2}\right]^{1/2}$$

$$= 7.52 \text{ in.}$$

Use 8 in. high lugs on a 16 in. high × ¾ in. thick band.

NM5-630 Split-Ring Flange

Develop a flange for splitting the ring in the previous example. This is a ¾ in. thick × 16 in. high ring on a 10-ft nominal diameter vessel. The filled weight is 67,000 lb. Assume eight lugs. From the previous example

E = 3 in.
e = 3.75 in.
R = 61 in.
W = 67,000 lb

Referencing Figure NM5-3, assume

a = 1.875 in.
c = 0.625 in.
f = 14 in.
r = 7¼ in.

(a) Determine Moments

(1) Moment due to bending

$$M_b = W(-0.00417R + 0.0239e)$$
$$= 67{,}000(-0.2544 + 0.090)$$
$$= -11{,}015 \text{ in.-lb}$$

(2) Moment due to torsion

$$M_t = 0.0577We$$
$$= (0.0577)(67{,}000)(3.75)$$
$$= 14{,}497 \text{ in.-lb}$$

(b) Bolt Sizing

(1) Bending

$$\text{bolt load} = M_b/f = 11{,}015/14 = 786.8 \text{ lb (tension)}$$

Figure NM5-8 Ring Design Chart for Eight Lugs

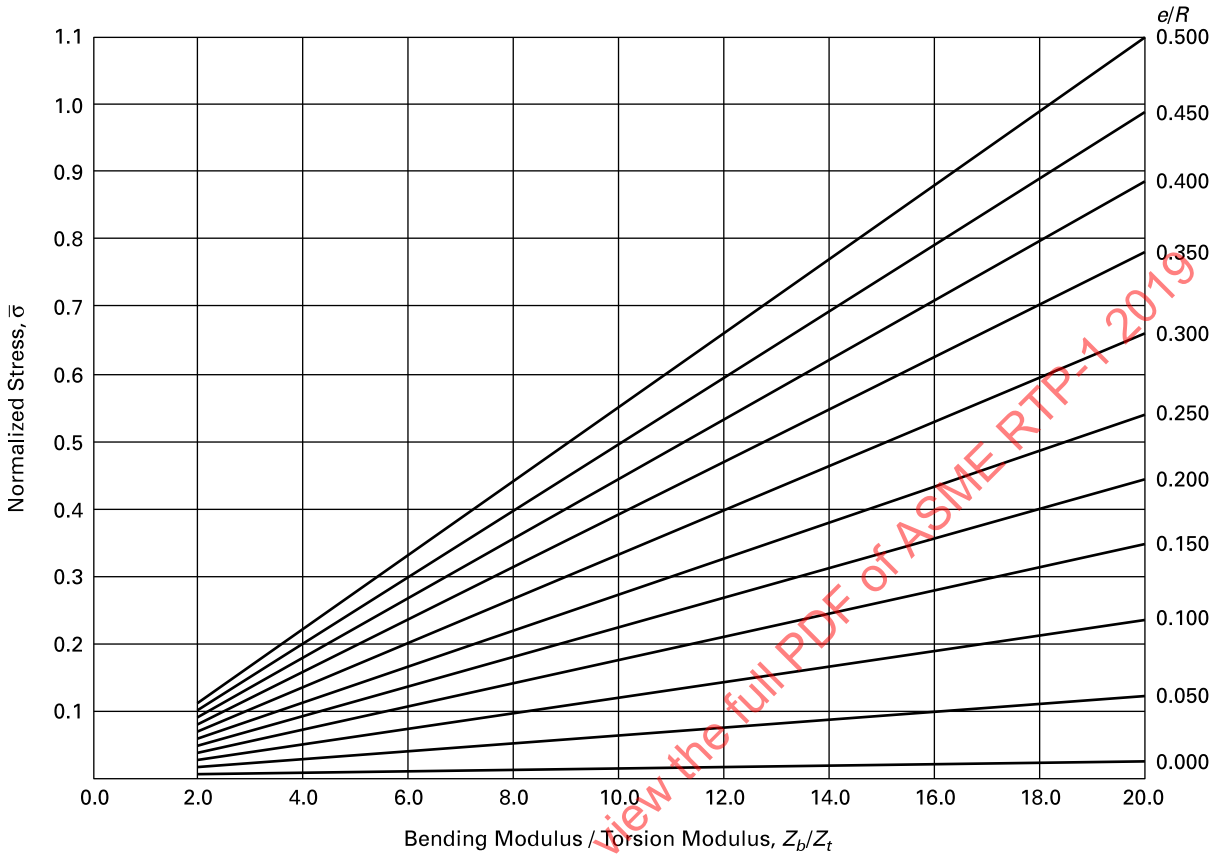

ASMENORMDOC.COM : Click to view the full PDF of ASME RTP-1 2019

Assume $^5/_8$ in. bolt; A_b = 0.202 in.^{2} Then

bolt stress (tension) = (2)(786.8)/(2)(0.202) = 3,895psi
<25,000 psi for B7 bolts

(2) Torsion

bolt load=M_t/r = 14,497/7.25 = 2,000 lb (shear)

bolt stress=2,000/(2)(0.202) = 4,950 psi < 25,000/2 psi

(3) Flange thickness on cantilevered flange

$$M_f = \text{bold load(tensile)} \times a$$
$$= (786.8)(1.875) = 1{,}475 \text{ in.-lb}$$

$$Z_{\min} = 1{,}475/12{,}700 = 0.116 \text{ in.}^3$$

$$t_f = [(2)(0.116)/0.625]^{1/2}$$
$$= 0.609 \text{ in. (use } {}^{11}/_{16} \text{ in. minimum)}$$

Figure NM5-9 Example Cross Section

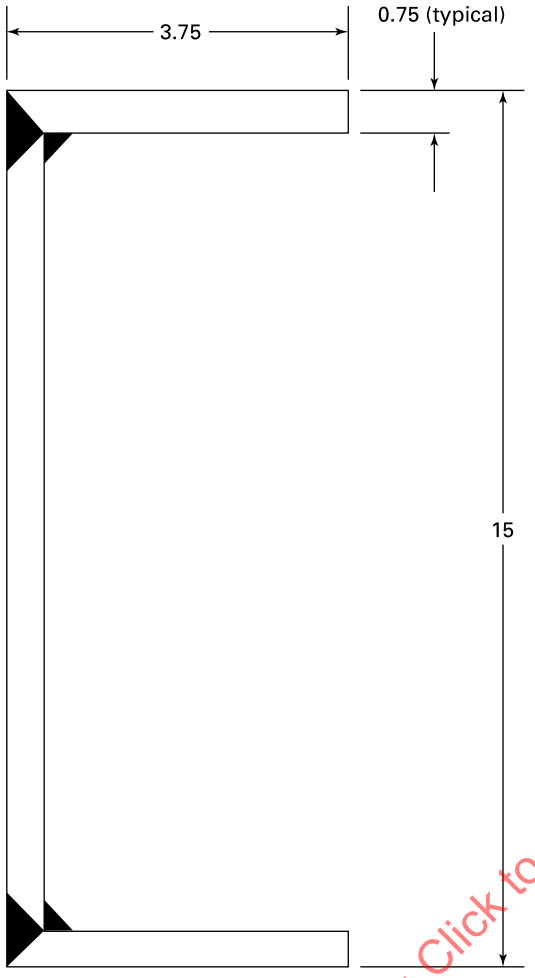

$$I = \frac{0.75(13.5)^3}{13} + 2(7.5 - 0.375)^2(3.75)(0.75) = 439.3\ \text{in.}^4$$

$$J = \frac{1}{3}(3.75)(0.75)^3 + \frac{1}{3}(13.5)(0.75)^3 + \frac{1}{3}(3.75)(0.75)^3 = 2.95\ \text{in.}^4$$

$$Z_b = \frac{439.3}{7.5} = 58.5\ \text{in.}^3$$

$$Z_t = \frac{2.95}{0.75} = 3.94\ \text{in.}^3$$

ASMENORMDOC.COM : Click to view the full PDF of ASME RTP-1 2019

Figure NM5-10 Lug

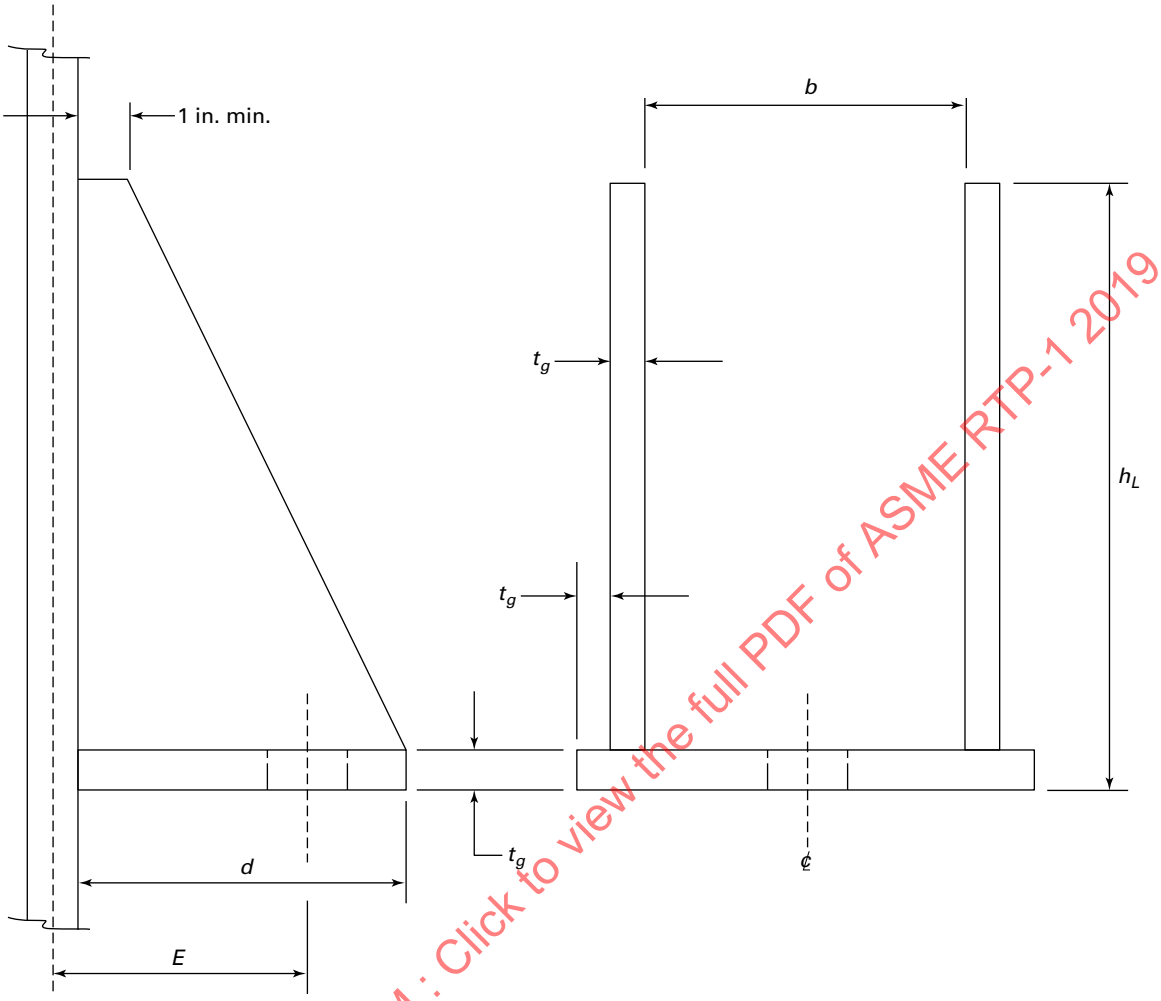

ASMENORMDOC.COM : Click to view the full PDF of ASME RTP-1 2019

NONMANDATORY APPENDIX NM-6
EXAMPLE OF A FABRICATOR'S QUALITY CONTROL PROGRAM

This Appendix shows one example of a Fabricator's Quality Control Program. It is written with mandatory language to illustrate the proper terminology for such a program.

NOTE: Refer to Mandatory Appendices M-1 and M-2 and Nonmandatory Appendix NM-7 for tables from those appendices that are referenced here.

Table of Contents

Section	Title
1	Quality Control Policy
2	Quality Control Organization
3	Documentation
4	Inspection of Received Goods
5	In-Process Inspection
6	Finished Equipment Inspection
7	Record Retention and Controls

SECTION 1 QUALITY CONTROL POLICY

1.1 Scope

This policy establishes the requirements, systems, and procedures for the Quality Assurance Program.

1.2 Purpose

The purposes of the Quality Assurance Program are as follows.

1.2.1 Ensure adherence to the rules and requirements of ASME RTP-1 through correct and thorough processing of purchase orders, drawings, specifications, and other documents.

1.2.2 Establish an inspection system to monitor the variability of workmanship, processes, and materials in order to produce a consistent, uniform product.

1.2.3 Establish and monitor the quality requirements related to materials and services of Vendors or Subcontractors based on surveillance and performance analysis.

1.2.4 Provide a system for the detection of defect trends and institute corrective measures.

1.3 Laboratory Standards

1.3.1 A laboratory standards program shall be maintained for the calibration of the measuring and test equipment.

1.3.2 The program shall provide confidence in the accuracy of the measuring and test equipment.

1.4 Test Methods

Specific written inspection and test procedures shall be followed for all inspection and test operations.

1.5 Operating Procedures

1.5.1 Parts shall be made in the sequence and by the conditions specified in the Fabricator's operating procedures.

1.5.2 These production procedures shall be available to Quality Control personnel during their audits so as to confirm adherence to them.

1.6 Documentation

1.6.1 Inspection results shall be documented and kept on file for 5 yr or as specified by contractual requirements, whichever is longer.

1.6.2 Inspection documentation shall be by reference to shop order number, part number, or in any manner that will link inspection results with a specific part.

1.6.3 Only approved forms shall be used for the entering of inspection results, as well as for such related items as the purchasing of raw materials, processing orders, and subcontracting work on orders.

1.6.4 Any change in documentation shall be approved by QC Management.

1.6.5 To ensure that the latest revision of each document is recorded and used during the fabrication process, Engineering shall maintain, update, and distribute the Document Control Sheet (Form NM6-3), at intervals not to exceed 7 days.

ASMENORMDOC.COM : Click to view the full PDF of ASME RTP-1 2019

1.7 Nonconformity Correction Reports

1.7.1 When nonconformities or imperfections requiring correction are discovered, a Nonconformity Correction Report, Form NM6-6 (copy attached), shall be initiated by the Quality Control Department.

1.7.2 The report shall be forwarded to Engineering to determine the cause of the nonconformity and to initiate proper corrective action.

1.7.3 The determination shall include
(a) manufacturing and processing procedures
(b) purchase orders
(c) results of tests

1.7.4 The report shall be reviewed and approved by the QC Manager, who shall also secure all other reviews and approvals as required by Mandatory Appendix M-7 of ASME RTP-1.

1.8 Distribution of QC Manual

1.8.1 The manual shall be distributed, as necessary, by the QC Manager.

1.8.2 Distribution of these manuals is limited, and each copy shall be numbered.

1.9 QC Manual Revision

1.9.1 The manual shall be revised, as necessary, by the QC Manager, subject to review and approval of the General Manager.

1.9.2 The manual index shall also be periodically updated by the QC Manager.

1.9.3 Manual updating shall be done by all holders upon receipt of a revised section, and the superseded parts shall be destroyed.

1.9.4 The QC Manager shall maintain a master record of all manual revisions (see Form NM6-7).

1.10 Notification of In-Process Changes

1.10.1 Initiator shall notify all responsible parties in writing or verbally with written confirmation, depending on the impact of the change.

1.10.2 Changes require Engineering approval before implementation.

1.10.3 Necessary documentation shall be changed and clearly marked.

SECTION 2 QUALITY CONTROL ORGANIZATION

2.1 Scope and Purpose

This section sets forth the following:

2.1.1 The organization of the Quality Control Department.

2.1.2 The definition of the responsibilities and authorities associated with each job.

2.1.3 The relationship of each job to other jobs within the organization.

2.2 Organizational Responsibility

2.2.1 General Management is responsible for the establishment and maintenance of an adequate Quality Control Program.

2.2.2 Additional personnel outside of the QC Department may be assigned to act in various quality control functions.

2.2.3 Where inspection is done by non-QC personnel, audits of the effectiveness of their work shall be periodically performed by QC.

2.3 Organizational Functions

2.3.1 The total quality function encompasses many activities and personnel, but it is the function of QA personnel to ensure conformance to specifications.
These functions include
(a) design review of applicable drawings
(b) inspection of incoming raw materials and components
(c) providing control at various stages of processing and fabricating
(d) determining product release or rejection

2.3.2 QC Management shall analyze rejection decisions. It may finalize the decision or make changes under permitted repair procedures.

2.4 Organization Chart

See Figure NM6-1.

SECTION 3 DOCUMENTATION

3.1 Scope and Purpose

3.1.1 This section establishes the minimum documentation required for quality control during fabrication of RTP equipment.

3.1.2 Adequate and meticulous documentation is the foundation of a good Quality Control Program.

3.2 Minimum Documentation

See Document Distribution List, Table NM6-4.

3.3 Document Preparation Responsibility

See Documentation Preparation and Distribution Responsibility, Table NM6-5 (copy attached).

ASMENORMDOC.COM : Click to view the full PDF of ASME RTP-1 2019

SECTION 4 INSPECTION OF RECEIVED GOODS

4.1 Resin

The results of the following shall be recorded on the Resin Log Sheet, Form M2E-1, prior to use in fabrication.

4.1.1 The resin shall be checked to ensure it is the product ordered.

4.1.2 The resin shall have the proper label for the specified product, including the manufacturer's product name and Manufacturer's Specific Product Identification (MSPI).

4.1.3 The resin shall be visually checked to be of typical color and clarity for the specific resin, free from solid or gelled particles.

4.1.4 The resin shall be within the manufacturer's specified limits for specific gravity, viscosity, and room temperature gel time as determined by the test methods of Mandatory Appendix M-2, Articles B through E, of ASME RTP-1.

4.1.5 Material certification and/or Certificates of Compliance where applicable shall be checked against the MSPI.

4.1.6 The storage environment of the resin shall be in compliance with the manufacturer's recommendations.

4.2 Reinforcements

The results of the following shall be recorded on Log Sheets, Forms M1A-1, M1B-1, M1C-1, and M1D-1, prior to use in fabrication.

4.2.1 The reinforcement shall be checked to ensure it is the product ordered.

4.2.2 The reinforcement shall have the proper label, including the manufacturer's product name and the MSPI.

4.2.3 The reinforcement package shall be checked for damage.

4.2.4 Material certification and/or Certificates of Compliance where applicable shall be checked against the MSPI.

4.2.5 The storage environment of reinforcements shall be in compliance with the manufacturer's recommendations.

4.3 Curing Agents

The results of the following shall be recorded on the Curing Agents Log Sheet, Form M2E-2, prior to use in fabrication.

4.3.1 Curing agents shall be checked to ensure they are the products ordered.

4.3.2 Curing agents shall have the proper label for the specified product, including the manufacturer's name and the MSPI.

4.3.3 Curing agents shall be visually checked to ensure there is no stratification of the material in two or more phases. In the case of liquids, they shall be free of sediment or solid particles.

4.3.4 Curing activity of the curing agent shall be checked using the test method outlined in Mandatory Appendix M-2, Article E, of ASME RTP-1.

4.3.5 The storage environment of curing agents shall be in compliance with the manufacturer's recommendations.

4.4 Purchased and/or Subvended Items

4.4.1 The item(s) shall be checked to ensure that it is the product ordered.

4.4.2 The item(s) shall be inspected for damage.

4.4.3 The item(s) shall be in compliance with the applicable drawings, specifications, and test methods that are part of the Fabricator/Subvendor/User agreement.

4.4.4 The item(s) shall be properly stored to ensure integrity.

4.5 Common Additives

The results of the following shall be recorded on the Common Additives Log Sheet, Form M2F-1, prior to use in fabrication.

4.5.1 Additives shall be checked to ensure they are the product ordered.

4.5.2 Additives shall have the proper label for the specified product, including the manufacturer's product name and the MSPI.

4.5.3 Additive packaging shall be checked for damage.

4.5.4 Additives shall be stored in an environment that complies with the manufacturer's recommendations.

SECTION 5 IN-PROCESS INSPECTION

5.1 Resin Mixing

The following data shall be recorded on the Mixing Data Sheet, Form NM6-1 (copy attached).

5.1.1 All resin mixing and primary preparation shall be done in one location under controlled conditions.

5.1.2 Formulas that have been predetermined for each particular type of resin shall be kept in a logbook containing completed Mixing Data Sheets.

ASMENORMDOC.COM : Click to view the full PDF of ASME RTP-1 2019

Figure NM6-1 Organization Chart

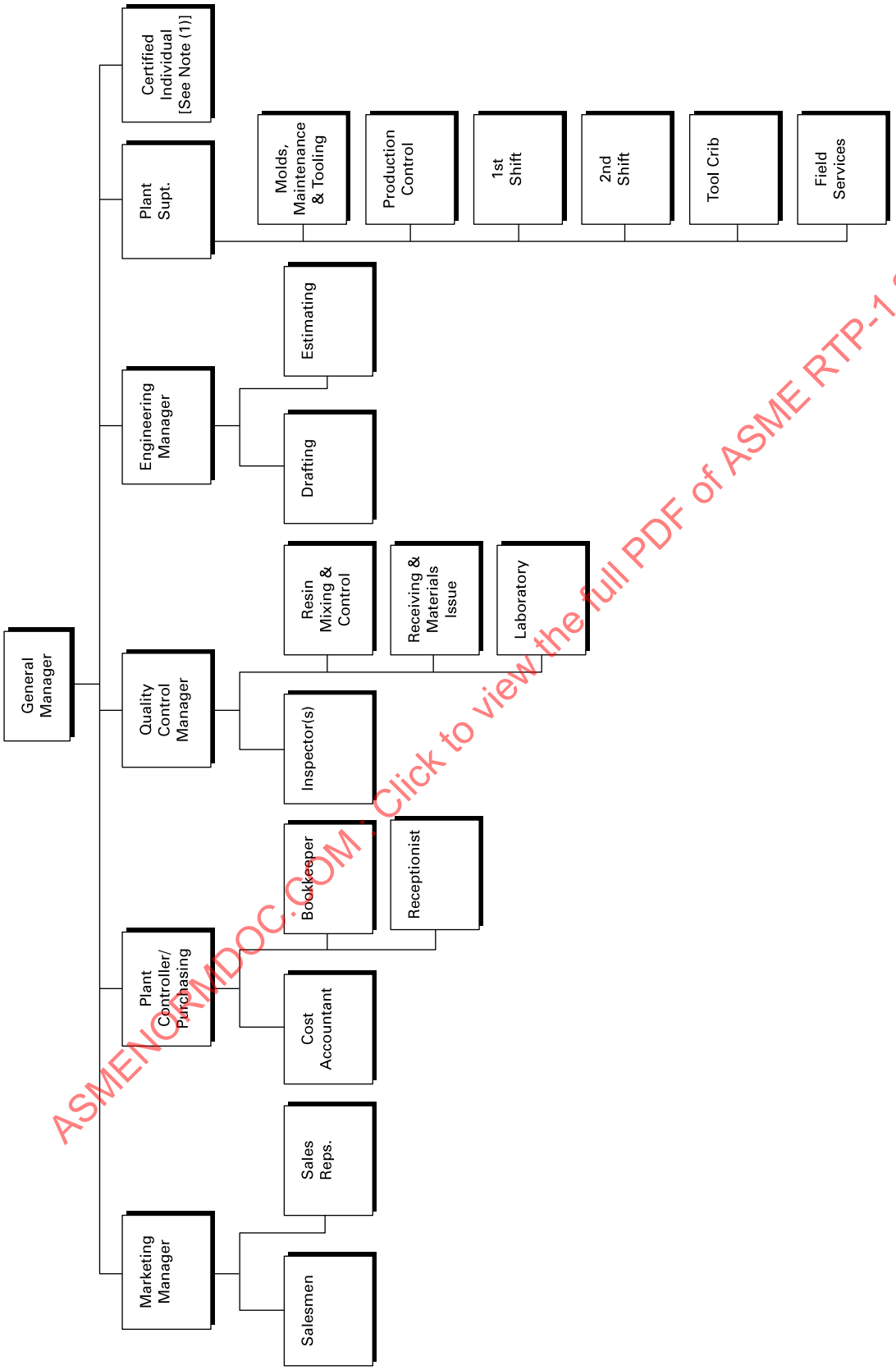

NOTE: (1) Refer to para. 1-400 for specific responsibilities.

ASMENORMDOC.COM : Click to view the full PDF of ASME RTP-1 2019

5.1.3 Mixing Data Sheets are also filled out for each batch and kept in a separate log with reference to the particular job number(s).

5.2 Material Dispersion

5.2.1 Resin shall be dispersed in containers that are clearly marked, identifying their contents. These identifying numbers must be transferred to the Component Data Sheet, Form NM6-2 (copy attached), for the component utilizing that resin.

5.2.2 Reinforcements shall be visually inspected, as they are dispersed, for imperfections (such as holes, cuts, thin spots, and separations) and contaminants (such as dirt, oil, grease, and foreign objects) under adequate overhead lighting. Dimensions, weights, and identifying numbers shall be recorded on Log Sheets (Forms M1A-1, M1B-1, M1C-1, and M1D-1).

5.3 Component Fabrication

The following data shall be recorded on the Component Data Sheet, Form NM6-2 (copy attached), prior to assembly.

5.3.1 As components are fabricated, the identification numbers of the materials used are recorded.

5.3.2 The lamination sequence of a particular component shall be recorded and verified to be correct.

5.3.3 On machine-made components, pertinent machine settings shall be recorded.

5.3.4 Curing agent system and amount utilized for each component shall be recorded.

5.3.5 Barcol readings of fabricated components shall be taken and recorded.

5.4 Assembly

The following data shall be recorded on the Inspection Checklist, Form NM7-2: Throughout the assembly procedure, proper sequences, materials, and dimensions shall be verified.

SECTION 6 FINISHED EQUIPMENT INSPECTION

The following data shall be recorded on the Inspection Checklist, Form NM7-2.

6.1 Resin Cure

6.1.1 Surface hardness shall be checked in accordance with ASTM D2583. Random readings shall be taken on all parts and overlays. Certain corrosion barriers and cure systems may result in lower than typical hardness. If this is anticipated, an adjusted Barcol hardness value shall be established with the User prior to fabrication.

6.1.2 All surfaces including overlays shall pass an acetone sensitivity test. This is done by rubbing several drops of acetone on a small area and allowing the acetone to evaporate. Tackiness indicates improper resin cure.

6.1.3 All repairs to correct a nonconformity shall be made in accordance with Mandatory Appendix M-7 of ASME RTP-1.

6.2 Dimensions and Laminate Thickness

6.2.1 Thicknesses of all components and overlays shall be checked in accordance with para. 6-920 of ASME RTP-1. Thicknesses can be verified by measuring actual cutouts, where possible, or employing an ultrasonic or magnetic gage.

6.2.2 All dimensions and locations shall be checked against the equipment drawing and recorded.

6.2.3 All repairs to correct a nonconformity shall be made in accordance with Mandatory Appendix M-7 of ASME RTP-1.

6.3 Visual Imperfections

6.3.1 The entire fabrication shall be checked for visual imperfections as described in Table 6-1 of ASME RTP-1. The equipment shall comply with the Visual Inspection Level that has been specified.

6.3.2 All repairs to correct an imperfection shall be made in accordance with Mandatory Appendix M-7 of ASME RTP-1.

6.4 Physical Property Tests

6.4.1 Reinforcement-to-resin ratio is established through loss by ignition testing in accordance with ASTM D2584. Each component shall be tested if a cutout or trim area is available.

6.4.2 Laminate proof tests on a cutout or end sample from the shell shall be done in accordance with ASTM D638, ASTM D3039, or ASTM D5083. Values obtained shall be equal to or greater than those specified and used in design calculations.

6.5 Equipment Pressure Tests

6.5.1 See para. 6-950 of ASME RTP-1 for requirements on pressure tests.

6.5.2 It is company safety policy that

(a) a relief valve set at 2 psig to 3 psig above the maximum test pressure be installed at the top of all vessels to be hydrotested under positive pressure

(b) prior to applying pressure, all air shall be displaced by water on vessels to receive a hydrotest at a positive pressure

ASMENORMDOC.COM : Click to view the full PDF of ASME RTP-1 2019

(c) all vacuum tests shall be conducted outside the shop, behind substantial safety barriers

(d) the Quality Control Manager shall review and approve all test setups for safety prior to applying pressure or vacuum

SECTION 7 RECORD RETENTION AND CONTROLS

7.1 Scope

7.1.1 This procedure shall ensure that the records retained are complete and reliable.

7.1.2 Inspection and testing records shall, as a minimum, indicate the nature and number of observations made, and the number and type of nonconformities found.

7.1.3 Records shall be available for review as one of the principal forms of objective evidence of the Quality Assurance Program.

7.2 Application and Retention

7.2.1 In general, records shall be retained by the Quality Control Department.

7.2.2 These records shall be used basically to verify product conformance. They shall indicate the acceptability of work or products and the action taken in connection with nonconformities.

7.3 Record Retention

The Quality Control Department shall maintain inspection and test records of complete assembled units or subassemblies. These records shall be stored and maintained for 5 yr.

7.4 Procedure for Record Handling

7.4.1 Records shall be filed primarily according to Shop Order number.

7.4.2 For incoming inspection, records shall be subdivided according to part number or alphabetically according to the name of the supplier.

7.4.3 Serialized items for shipment to a customer shall be filed sequentially. A separate file shall be maintained to show dates of shipments of individual items or groups of serialized items.

7.4.4 Records of shipped items shall show part name, part number, and serial number of the product. This shall be followed by a record of inspections, tests, etc., that will verify that the product conformed to specification at time of shipment.

7.4.5 Records shall form a basis of analysis and management action regarding the Quality Control Program.

Appendix #1 — Forms or Tables

Form or Table	Description	Effective Date
M2E-1	Resin Log Sheet	xx/xx/xx
M2E-2	Curing Agents Log Sheet	xx/xx/xx
M1A-1	Veil and Mat Reinforcement Log Sheet	xx/xx/xx
M1B-1	Roving Reinforcement Log Sheet	xx/xx/xx
M1C-1	Fabric Reinforcement Log Sheet	xx/xx/xx
M1D-1	Milled Fiber Reinforcement Log Sheet	xx/xx/xx
M2F-1	Common Additives Log Sheet	xx/xx/xx
NM6-1	Mixing Data Sheet	xx/xx/xx
NM6-2	Component Data Sheet	xx/xx/xx
NM6-3	Document Control Sheet	xx/xx/xx
NM6-4	Document Distribution List	xx/xx/xx
NM6-5	Document Preparation and Distribution Responsibility	xx/xx/xx
NM6-6	Nonconformity Correction Report (2 pages)	xx/xx/xx
NM6-7	QC Manual Master Revision List	xx/xx/xx
NM7-2	Inspection Checklist for RTP Equipment (3 pages)	xx/xx/xx

ASMENORMDOC.COM : Click to view the full PDF of ASME RTP-1 2019