ASME PVHO-1–2019
(Revision of ASME PVHO-1–2016)

Safety Standard for Pressure Vessels for Human Occupancy

ASMENORMDOC.COM : Click to view the full PDF of ASME PVHO-1 2019

AN AMERICAN NATIONAL STANDARD

The American Society of Mechanical Engineers

ASME PVHO-1–2019
(Revision of ASME PVHO-1–2016)

Safety Standard for Pressure Vessels for Human Occupancy

ASMENORMDOC.COM : Click to view the full PDF of ASME PVHO-1 2019

AN AMERICAN NATIONAL STANDARD

The American Society of Mechanical Engineers
Two Park Avenue • New York, NY • 10016 USA

Date of Issuance: January 24, 2020

The next edition of this Standard is scheduled for publication in 2022.

ASME issues written replies to inquiries concerning interpretations of technical aspects of this Standard. Periodically certain actions of the ASME PVHO Committee may be published as Cases. Cases and interpretations are published on the ASME website under the Committee Pages at http://cstools.asme.org/ as they are issued.

Errata to codes and standards may be posted on the ASME website under the Committee Pages to provide corrections to incorrectly published items, or to correct typographical or grammatical errors in codes and standards. Such errata shall be used on the date posted.

The Committee Pages can be found at http://cstools.asme.org/. There is an option available to automatically receive an e-mail notification when errata are posted to a particular code or standard. This option can be found on the appropriate Committee Page after selecting "Errata" in the "Publication Information" section.

ASME is the registered trademark of The American Society of Mechanical Engineers.

This code or standard was developed under procedures accredited as meeting the criteria for American National Standards. The Standards Committee that approved the code or standard was balanced to assure that individuals from competent and concerned interests have had an opportunity to participate. The proposed code or standard was made available for public review and comment that provides an opportunity for additional public input from industry, academia, regulatory agencies, and the public-at-large.

ASME does not "approve," "rate," or "endorse" any item, construction, proprietary device, or activity.

ASME does not take any position with respect to the validity of any patent rights asserted in connection with any items mentioned in this document, and does not undertake to insure anyone utilizing a standard against liability for infringement of any applicable letters patent, nor assume any such liability. Users of a code or standard are expressly advised that determination of the validity of any such patent rights, and the risk of infringement of such rights, is entirely their own responsibility.

Participation by federal agency representative(s) or person(s) affiliated with industry is not to be interpreted as government or industry endorsement of this code or standard.

ASME accepts responsibility for only those interpretations of this document issued in accordance with the established ASME procedures and policies, which precludes the issuance of interpretations by individuals.

No part of this document may be reproduced in any form,
in an electronic retrieval system or otherwise,
without the prior written permission of the publisher.

The American Society of Mechanical Engineers
Two Park Avenue, New York, NY 10016-5990

Copyright © 2020 by
THE AMERICAN SOCIETY OF MECHANICAL ENGINEERS
All rights reserved
Printed in U.S.A.

ASMENORMDOC.COM : Click to view the full PDF of ASME PVHO-1 2019

CONTENTS

Foreword . . . viii

Committee Roster . . . ix

Correspondence With the PVHO Committee . . . xii

Summary of Changes . . . xiv

Section 1 General Requirements . . . 1
1-1 Introduction . . . 1
1-2 Scope . . . 1
1-3 Exclusions . . . 1
1-4 User Requirements . . . 1
1-5 Manufacturer's Data Report . . . 1
1-6 Materials . . . 2
1-7 Design and Fabrication Requirements . . . 2
1-8 Pressure Relief Devices . . . 9
1-9 Marking . . . 9
1-10 Nonmetallic Materials and Toxicity Off-Gas Testing . . . 9
1-11 Risk Analysis . . . 10
1-12 Lithium Batteries . . . 10
1-13 Automatic Control and Software Safety . . . 12
1-14 Operational Pressure Cycle . . . 12
Section 2 Viewports . . . 19
2-1 General . . . 19
2-2 Design . . . 19
2-3 Material . . . 30
2-4 Fabrication . . . 33
2-5 Inspection . . . 33
2-6 Marking . . . 35
2-7 Pressure Testing . . . 36
2-8 Installation of Windows in Chambers . . . 36
2-9 Repair of Damaged Windows Prior to Being Placed in Service . . . 37
2-10 Guidelines for Application of the Requirements of Section 2 . . . 38
Section 3 Quality Assurance for PVHO Manufacturers . . . 88
3-1 General . . . 88
3-2 Responsibilities . . . 88
Section 4 Piping Systems . . . 89
4-1 General . . . 89
4-2 Material Requirements . . . 89
4-3 Design of Components . . . 91
4-4 Selection and Limitations of Piping Components . . . 92

ASMENORMDOC.COM : Click to view the full PDF of ASME PVHO-1 2019

4-5	Selection and Limitations of Piping Joints	93
4-6	Supports	94
4-7	Inspection	94
4-8	Testing	95
4-9	Systems	95
Section 5	Medical Hyperbaric Systems	103
5-1	General	103
5-2	PVHO System Design	104
5-3	Gas Systems	104
5-4	Control Systems and Instrumentation	104
5-5	Environmental Systems	104
Section 6	Diving Systems	106
6-1	General	106
6-2	Design	107
6-3	Pressure Boundary	108
6-4	Systems	110
6-5	Handling Systems	114
6-6	Hyperbaric Evacuation Systems	115
6-7	Testing and Trials	117
Section 7	Submersibles	119
7-1	General	119
7-2	Pressure Boundary	120
7-3	Piping	121
7-4	Electrical Systems	121
7-5	Life Support	122
7-6	Fire Protection	123
7-7	Navigation	123
7-8	Communications	124
7-9	Instrumentation	124
7-10	Buoyancy, Stability, Emergency Ascent, and Entanglement	124
7-11	Emergency Equipment	125

Mandatory Appendices

I	Reference Codes, Standards, and Specifications	126
II	Definitions	128

Nonmandatory Appendices

A	Design of Supports and Lifting Attachments	134
B	Recommendations for the Design of Through-Pressure Boundary Penetrations	135
C	Recommended Practices for Color Coding and Labeling	138
D	Guidelines for the Submission of a Case for the Use of Nonstandard Designs, Materials, and Construction for Non-Flexible PVHO Chamber Fabrication	139
E	Guidelines for Preparing a Performance-Based Case for Flexible PVHO Chambers and Systems	146
F	Useful References	176

ASMENORMDOC.COM : Click to view the full PDF of ASME PVHO-1 2019

Figures

1-7.13.1-1 Geometry of Cylinders 15
1-7.13.1-2 Stiffener Geometry 16
1-7.13.1-3 Sections Through Rings 16
1-7.13.5-1 Values of t/R_o and L_c/R_o 17
1-9-1 Form of Nameplate, U.S. Customary Units 18
1-9-2 Form of Nameplate, SI Units 18
2-2.2.1-1 Standard Window Geometries — Part 1 43
2-2.2.1-2 Standard Window Geometries — Part 2 44
2-2.2.1-3 Standard Window Geometries — Part 3 45
2-2.2.1-4 Standard Window Geometries — Part 4 46
2-2.5.1-1 Short-Term Critical Pressure of Flat Disk Acrylic Windows — Part 1 49
2-2.5.1-2 Short-Term Critical Pressure of Flat Disk Acrylic Windows — Part 2 50
2-2.5.1-3 Short-Term Critical Pressure of Flat Disk Acrylic Windows — Part 3 51
2-2.5.1-4 Short-Term Critical Pressure of Conical Frustum Acrylic Windows — Part 1 52
2-2.5.1-5 Short-Term Critical Pressure of Conical Frustum Acrylic Windows — Part 2 53
2-2.5.1-6 Short-Term Critical Pressure of Spherical Sector Acrylic Windows — Part 1 54
2-2.5.1-7 Short-Term Critical Pressure of Spherical Sector Acrylic Windows — Part 2 55
2-2.5.1-8 Short-Term Critical Pressure of Cylindrical Acrylic Windows Pressurized Internally — Part 1 56
2-2.5.1-9 Short-Term Critical Pressure of Cylindrical Acrylic Windows Pressurized Internally — Part 2 57
2-2.5.1-10 Short-Term Critical Pressure of Cylindrical Acrylic Windows Pressurized Externally 58
2-2.5.1-11 Short-Term Elastic Buckling of Cylindrical Acrylic Windows Between Supports Under External Hydrostatic Pressure — Part 1 59
2-2.5.1-12 Short-Term Elastic Buckling of Cylindrical Acrylic Windows Between Supports Under External Hydrostatic Pressure — Part 2 60
2-2.5.1-13 Short-Term Elastic Buckling of Cylindrical Acrylic Windows Between Supports Under External Hydrostatic Pressure — Part 3 61
2-2.5.1-14 Short-Term Critical Pressure of Hyperhemispherical and NEMO-Type Acrylic Windows — Part 1 62
2-2.5.1-15 Short-Term Critical Pressure of Hyperhemispherical and NEMO-Type Acrylic Windows — Part 2 63
2-2.10.1-1 Seat Cavity Requirements — Conical Frustum Window, Spherical Sector Window With Conical Edge, and Flat Disk Window 64
2-2.10.1-2 Seat Cavity Requirements — Double-Beveled Disk Window 65
2-2.10.1-3 Seat Cavity Requirements — Spherical Sector Window With Square Edge 66
2-2.10.1-4 Seat Cavity Requirements — Hemispherical Window With Equatorial Flange 67
2-2.10.1-5 Seat Cavity Requirements — Cylindrical Window 68
2-2.10.1-6 Seat Cavity Requirements — Hyperhemispherical Window 69
2-2.10.1-7 Seat Cavity Requirements — NEMO Window (Standard Seat) 70
2-2.10.1-8 Seat Cavity Requirements — NEMO Window (Seat With Extended Cyclic Fatigue Life) . . 71
2-2.11.10-1 Bevels on Window Edges — Flat Disk Windows, Conical Frustum Windows, Spherical Sector Windows, Hyperhemispheres 72
2-2.11.10-2 Bevels on Window Edges — Flanged Hemispherical Window, Spherical Sector Window With Square Edge, External Pressure and Internal Pressure of Cylindrical Windows 73
2-2.11.11-1 Acceptable Configurations for Clear Viewport Retaining Covers 74
2-2.14.11-1 Dimensional Tolerances for Penetrations in Acrylic Windows 75
2-2.14.15-1 Dimensional Tolerances for Inserts in Acrylic Windows 77

ASMENORMDOC.COM : Click to view the full PDF of ASME PVHO-1 2019

2-2.14.16-1 Typical Shapes of Inserts 78
2-2.14.22-1 Seal Configurations for Inserts in Acrylic Windows 79
2-2.14.24-1 Restraints for Inserts in Acrylic Windows 80
4-9.14.2-1 Flow Diagram of Apparatus for Measuring the Concentration of Hydrocarbons in a Stream of Air or Other Gas After It Has Passed Through a Test Hose 102
6-6.2.2-1 Placement and Design of Markings for Hyperbaric Evacuation Units Designed to Float in Water 118
6-6.2.2-2 Markings for Hyperbaric Evacuation Units Designed to Float in Water 118
B-2-1 Acceptable Weld Nozzle Penetrators 136
B-3-1 Acceptable Threads and Inserts 137
E-3.3.1-1 Cook's Diagram: Atmosphere of Increased Burning Rate 173
E-5.2.2.1-1 Number of Test Samples Required for Alternate Creep Test Procedure 174
E-5.2.5.1-1 Time Versus Test Temperature for Accelerated Aging Test 175

Tables

1-10-1 Conversion Factor, *Fp* (for PVHO Occupation Exceeding 8 hr) 18
2-2.3.1-1 Conversion Factors for Acrylic Flat Disk Windows 46
2-2.3.1-2 Conversion Factors for Acrylic Conical Frustum Windows and Double-Beveled Disk Windows 47
2-2.3.1-3 Conversion Factors for Acrylic Spherical Sector Windows With Conical Edge, Hyperhemispherical Windows With Conical Edge, and NEMO-Type Windows With Conical Edge 47
2-2.3.1-4 Conversion Factors for Acrylic Spherical Sector Windows With Square Edge and Hemispherical Windows With Equatorial Flange 48
2-2.3.1-5 Conversion Factors for Acrylic Cylindrical Windows 48
2-2.3.2-1 Conical Frustum Windows for Design Pressures in Excess of 10,000 psi (69 MPa) 49
2-2.14.13-1 Specified Values of Physical Properties for Polycarbonate Plastic 76
2-2.14.13-2 Specified Values of Physical Properties for Cast Nylon Plastic 76
2-3.4-1 Specified Values of Physical Properties for Each Lot 81
2-3.4-2 Specified Values of Physical Properties for Each Casting 83
2-4.5-1 Annealing Schedule for Acrylic Windows 85
4-2.1.1-1 Maximum Allowable Stress Values for Seamless Pipe and Tube Materials Not Listed in Nonmandatory Appendix A of ASME B31.1 101
4-7.1-1 Mandatory Minimum Nondestructive Examinations for Pressure Welds in Piping Systems for Pressure Vessels for Human Occupancy 101
4-9.14.2-1 Maximum Allowable Concentration of Hydrocarbons in Air Passing Through Hose 102
C-1 U.S. Navy Color Codes 138
C-2 IMO Color Codes 138
D-7.1-1 Tabulated Data for Performance of "W-Test" for Normality of Data Set 145
E-1.1-1 Compliance Matrix for ASME PVHO-1 Cases 159

Forms

PVHO-1 GR-1 Manufacturer's Data Report for Pressure Vessels for Human Occupancy 13
PVHO-1 GR-1S Manufacturer's Data Report Supplementary Sheet 14
PVHO-1 VP-1 Fabrication Certification for Acrylic Windows 41
PVHO-1 VP-2 Acrylic Window Design Certification 42
PVHO-1 VP-3 Material Manufacturer's Certification for Acrylic 82
PVHO-1 VP-4 Material Testing Certification for Acrylic 84

ASMENORMDOC.COM : Click to view the full PDF of ASME PVHO-1 2019

PVHO-1 VP-5 Pressure Testing Certification 86
PVHO-1 VP-6 Acrylic Window Repair Certification 87

ASMENORMDOC.COM : Click to view the full PDF of ASME PVHO-1 2019

FOREWORD

Early in 1971, an ad hoc committee was formed by action of the ASME Codes and Standards Policy Board to develop design rules for pressure vessels for human occupancy. The importance of this task was soon recognized, and the ASME Safety Code Committee on Pressure Vessels for Human Occupancy (PVHO) was established in 1974 to continue the work of the ad hoc committee. Initially, this committee was to confine its activity to the pressure boundary of such systems. It was to reference existing ASME Boiler and Pressure Vessel Code (BPVC) Sections, insofar as practicable, adapting them for application to pressure vessels for human occupancy. The common practice hitherto had been to design such chambers in accordance with Section VIII, Division 1 of ASME BPVC; however, a number of important considerations were not covered in those rules. Among these were requirements for viewports and the in-service use of pressure relief valves, and special material toughness requirements. This Standard provides the necessary rules to supplement that Section, and also Section VIII, Division 2 of ASME BPVC. The user is expected to be familiar with the principles and application of the Code Sections.

ASME BPVC criteria furnish the baseline for design. In ASME PVHO-1, design temperature is limited to 0°F to 150°F (−18°C to 66°C). Supporting structure and lifting loads are given special attention. Certain design details permitted by Section VIII are excluded. A major addition is the inclusion of design rules for acrylic viewports (Section 2). The formulation of rules for these vital and critical appurtenances was one of the reasons for establishing the PVHO Committee. Finally, all chambers designed for external pressure are required to be subjected to an external pressure hydrostatic test or pneumatic test.

The 2007 edition was completely rewritten and reformatted from the 2002 edition. Section 1, General Requirements, is intended to be used for all PVHOs, regardless of use. The rules for external pressure design were expanded to include unstiffened and ring-stiffened cylinders, in addition to spheres. Other additions included Sections pertaining to application-specific PVHOs. Sections were included for medical hyperbaric systems, diving systems, submersibles, and quality assurance. The Piping Systems Section was expanded. Where possible, Mandatory Appendices were incorporated into the body of the Standard. All forms were revised to reflect the document (PVHO-1), an abbreviation denoting the corresponding section (e.g., General Requirements is GR), and the form number within that Section. An example is PVHO-1 Form GR-1.

The 2012 edition included expansions made to the General Requirements, Viewports, and Diving Systems Sections.

The 2016 edition included additional expansions made to the General Requirements, Viewports, Medical Hyperbaric Systems, and Diving Systems Sections. It included a new Nonmandatory Appendix for preparing PVHO performance-based Cases for flexible chambers. There is continuing work being accomplished by the Subcommittees in the areas of PVHOs using nonstandard materials, including nonmetallic PVHOs. A companion document (ASME PVHO-2) that covers in-service guidelines for PVHOs has been published.

The 2019 edition of PVHO-1 continues the work to address complete PVHO systems and PVHOs made from nonstandard materials. In support of this work, definitions in Mandatory Appendix II and various forms were added or updated to reflect the differences in approach to documenting the entire PVHO system as a whole rather than as single or multiple pressure vessels/chambers. Additionally, changes were made to this edition in efforts to clarify several design standards and requirements for easier understanding and implementation by all users of this Standard.

Interpretations, Code Cases, and errata to ASME PVHO-1 are published on the following ASME web page: https://cstools.asme.org/csconnect/CommitteePages.cfm?Committee=N10050000.

The 2019 edition of ASME PVHO-1 was approved and adopted by the American National Standards Institute as meeting the criteria as an American National Standard on December 4, 2019. Previous editions were published in 1977, 1981, 1984, 1987, 1993, 1997, 2002, 2007, 2012, and 2016.

ASMENORMDOC.COM : Click to view the full PDF of ASME PVHO-1 2019

ASME PRESSURE VESSELS FOR HUMAN OCCUPANCY COMMITTEE

(The following is the roster of the Committee as of February 19, 2019.)

STANDARDS COMMITTEE OFFICERS

G. Wolfe, *Chair*
J. Witney, *Vice Chair*
E. Lawson, *Secretary*

STANDARDS COMMITTEE PERSONNEL

J. E. Crouch, Southwest Research Institute
B. Faircloth, FMS Engineering, LLC
M. A. Frey, Naval Sea Systems Command
T. R. Galloway, Naval Sea Systems Command
B. Kemper, Kemper Engineering Services, LLC
W. Kohnen, Hydrospace Group, Inc.
D. Lawrence, U.S. Coast Guard
E. Lawson, The American Society of Mechanical Engineers
S. Reimers, Reimers Systems, Inc.
G. Richards, Blanson, Ltd.
T. C. Schmidt, Lockheed Martin
K. A. Smith, U.S. Coast Guard
R. C. Smith, Naval Facilities Engineering Command, Ocean Facilities Program
J. Stromer, Triton Submarines
D. Talati, Sechrist Industries, Inc.
R. Thomas, American Bureau of Shipping
M. R. Walters, Oceaneering International, Inc.
J. Witney, Atlantis Submarines International
G. Wolfe, Southwest Research Institute
E. G. Fink, *Delegate*, Fink Engineering Pty., Ltd.
H. Pauli, *Delegate*, Germanischer Lloyd AG
J. S. Selby, *Delegate*, SOS Group Global, Ltd.
L. Cross, *Alternate*, Kemper Engineering Services, LLC
J. P. Hierholzer, *Alternate*, DNV GL
J. K. Martin, *Alternate*, Perry Technologies
P. Selby, *Alternate*, SOS Group Global, Ltd.
M. W. Allen, *Contributing Member*, Microbaric Oxygen Systems, LLC
W. F. Crowley, Jr., *Contributing Member*, Aerospace & Undersea Support Services, LLC
W. Davison, *Contributing Member*
G. J. Jacob, *Contributing Member*, Navy Experimental Diving Unit
J. Maison, *Contributing Member*, Adaptive Computer Technology, Inc.
T. Marohl, *Contributing Member*
J. C. Sheffield, *Contributing Member*, International ATMO, Inc.

HONORARY MEMBERS

R. J. Dzikowski
F. T. Gorman
L. G. Malone, Plastic Supply & Fabric, Inc.
R. P. Swanson

SPECIAL PROJECTS TASK GROUP

J. Witney, *Chair*, Atlantis Submarines International
J. E. Crouch, Southwest Research Institute
E. G. Fink, Fink Engineering Pty., Ltd.
M. A. Frey, Naval Sea Systems Command
T. R. Galloway, Naval Sea Systems Command
B. Kemper, Kemper Engineering Services, LLC
W. Kohnen, Hydrospace Group, Inc.
S. Reimers, Reimers Systems, Inc.
G. Richards, Blanson, Ltd.
R. C. Smith, Naval Facilities Engineering Command, Ocean Facilities Program
G. Wolfe, Southwest Research Institute
L. Cross, *Alternate*, Kemper Engineering Services, LLC
M. W. Allen, *Contributing Member*, Microbaric Oxygen Systems, LLC
K. K. Kemper, *Contributing Member*, Kemper Engineering Services, LLC

TASK GROUP ON TUNNELING

L. Cross, Kemper Engineering Services, LLC
G. L. East, ASI Marine
E. G. Fink, Fink Engineering Pty., Ltd.
J. P. Hierholzer, DNV GL
B. Kemper, Kemper Engineering Services, LLC
W. Kohnen, Hydrospace Group, Inc.
S. Reimers, Reimers Systems, Inc.
M. W. Allen, *Contributing Member*, Microbaric Oxygen Systems, LLC

ASMENORMDOC.COM : Click to view the full PDF of ASME PVHO-1 2019

SUBCOMMITTEE ON DESIGN AND PIPING SYSTEMS

T. C. Schmidt, *Chair*, Lockheed Martin
B. Faircloth, *Vice Chair*, FMS Engineering, LLC
E. Lawson, *Secretary*, The American Society of Mechanical Engineers
G. Bryant, Consultant
W. Davison
R. K. Dixit, Reimers Systems, Inc.
P. Forte, Woods Hole Oceanographic Institution
M. A. Frey, Naval Sea Systems Command
T. R. Galloway, Naval Sea Systems Command
C. Gaumond, Groupe Medical Gaumond
B. Humberstone, Diving Technical Advisor
G. J. Jacob, Navy Experimental Diving Unit
B. Kemper, Kemper Engineering Services, LLC
S. Reimers, Reimers Systems, Inc.
D. A. Renear, Aqua-Air Industries, Inc.
G. Richards, Blanson, Ltd.
R. Thomas, American Bureau of Shipping
M. R. Walters, Oceaneering International, Inc.
J. S. Selby, *Delegate*, SOS Group Global, Ltd.
L. Cross, *Alternate*, Kemper Engineering Services, LLC
J. K. Martin, *Alternate*, Perry Technologies
J. N. Pollack, *Alternate*, U.S. Navy
P. Selby, *Alternate*, SOS Group Global, Ltd.
R. M. Webb, *Alternate*, Naval Sea Systems Command
M. W. Allen, *Contributing Member*, Microbaric Oxygen Systems, LLC
F. Burman, *Contributing Member*, Divers Alert Network
W. F. Crowley, Jr., *Contributing Member*, Aerospace & Undersea Support Services, LLC
K. K. Kemper, *Contributing Member*, Kemper Engineering Services, LLC

SUBCOMMITTEE ON DIVING SYSTEMS

R. Thomas, *Chair*, American Bureau of Shipping
T. R. Galloway, *Vice Chair*, Naval Sea Systems Command
E. Lawson, *Secretary*, The American Society of Mechanical Engineers
G. Bryant, Consultant
W. F. Crowley, Jr., Aerospace & Undersea Support Services, LLC
G. L. East, ASI Marine
B. Faircloth, FMS Engineering, LLC
B. Humberstone, Diving Technical Advisor
B. Kemper, Kemper Engineering Services, LLC
D. Lawrence, U.S. Coast Guard
J. K. Martin, Perry Technologies
D. A. Renear, Aqua-Air Industries, Inc.
J. S. Selby, SOS Group Global, Ltd.
K. A. Smith, U.S. Coast Guard
M. R. Walters, Oceaneering International, Inc.
E. G. Fink, *Delegate*, Fink Engineering Pty., Ltd.
H. Pauli, *Delegate*, Germanischer Lloyd AG
L. Cross, *Alternate*, Kemper Engineering Services, LLC
T. Gilman, *Alternate*, U.S. Coast Guard
P. Selby, *Alternate*, SOS Group Global, Ltd.
M. W. Allen, *Contributing Member*, Microbaric Oxygen Systems, LLC
K. K. Kemper, *Contributing Member*, Kemper Engineering Services, LLC
T. Marohl, *Contributing Member*

SUBCOMMITTEE ON GENERAL REQUIREMENTS

M. A. Frey, *Chair*, Naval Sea Systems Command
B. Kemper, *Vice Chair*, Kemper Engineering Services, LLC
E. Lawson, *Secretary*, The American Society of Mechanical Engineers
J. E. Crouch, Southwest Research Institute
T. R. Galloway, Naval Sea Systems Command
S. Reimers, Reimers Systems, Inc.
J. Witney, Atlantis Submarines International
L. Cross, *Alternate*, Kemper Engineering Services, LLC
J. N. Pollack, *Alternate*, U.S. Navy
R. M. Webb, *Alternate*, Naval Sea Systems Command
M. W. Allen, *Contributing Member*, Microbaric Oxygen Systems, LLC
G. J. Jacob, *Contributing Member*, Navy Experimental Diving Unit
K. K. Kemper, *Contributing Member*, Kemper Engineering Services, LLC

SUBCOMMITTEE ON MEDICAL HYPERBARIC SYSTEMS

G. Richards, *Chair*, Blanson, Ltd.
T. Dingman, *Vice Chair*, Healogics
E. Lawson, *Secretary*, The American Society of Mechanical Engineers
F. Burman, Divers Alert Network
L. Cross, Kemper Engineering Services, LLC
W. T. Gurnee, Oxyheal Health Group
S. Reimers, Reimers Systems, Inc.
R. C. Smith, Naval Facilities Engineering Command, Ocean Facilities Program
D. Talati, Sechrist Industries, Inc.
E. G. Fink, *Delegate*, Fink Engineering Pty., Ltd.
H. Pauli, *Delegate*, Germanischer Lloyd AG
B. Kemper, *Alternate*, Kemper Engineering Services, LLC
M. W. Allen, *Contributing Member*, Microbaric Oxygen Systems, LLC
W. Davison, *Contributing Member*
K. W. Evans, *Contributing Member*, Perry Baromedical
K. K. Kemper, *Contributing Member*, Kemper Engineering Services, LLC
J. C. Sheffield, *Contributing Member*, International ATMO, Inc.
N. To, *Contributing Member*, U.S. Food and Drug Administration

ASMENORMDOC.COM : Click to view the full PDF of ASME PVHO-1 2019

SUBCOMMITTEE ON POST CONSTRUCTION

J. E. Crouch, *Chair*, Southwest Research Institute
R. C. Smith, *Vice Chair*, Naval Facilities Engineering Command, Ocean Facilities Program
E. Lawson, *Secretary*, The American Society of Mechanical Engineers
G. Bryant, Consultant
T. Dingman, Healogics
M. A. Frey, Naval Sea Systems Command
T. R. Galloway, Naval Sea Systems Command
D. R. Hurd, Atlantis Submarines International
B. Kemper, Kemper Engineering Services, LLC
W. Kohnen, Hydrospace Group, Inc.
D. Lawrence, U.S. Coast Guard
J. K. Martin, Perry Technologies
G. Richards, Blanson, Ltd.
D. Talati, Sechrist Industries, Inc.
J. Witney, Atlantis Submarines International
L. Cross, *Alternate*, Kemper Engineering Services, LLC
T. Gilman, *Alternate*, U.S. Coast Guard
J. N. Pollack, *Alternate*, U.S. Navy
R. M. Webb, *Alternate*, Naval Sea Systems Command
M. W. Allen, *Contributing Member*, Microbaric Oxygen Systems, LLC
J. Bell, *Contributing Member*, Fink Engineering Pty., Ltd.
W. F. Crowley, Jr., *Contributing Member*, Aerospace & Undersea Support Services, LLC
W. Davison, *Contributing Member*
P. Forte, *Contributing Member*, Woods Hole Oceanographic Institution
B. Humberstone, *Contributing Member*, Diving Technical Advisor
G. J. Jacob, *Contributing Member*, Navy Experimental Diving Unit
K. K. Kemper, *Contributing Member*, Kemper Engineering Services, LLC
J. C. Sheffield, *Contributing Member*, International ATMO, Inc.

SUBCOMMITTEE ON SUBMERSIBLES

R. Thomas, *Chair*, American Bureau of Shipping
E. Lawson, *Secretary*, The American Society of Mechanical Engineers
G. Bryant, Consultant
J. P. Hierholzer, DNV GL
D. R. Hurd, Atlantis Submarines International
B. Kemper, Kemper Engineering Services, LLC
W. Kohnen, Hydrospace Group, Inc.
J. K. Martin, Perry Technologies
K. A. Smith, U.S. Coast Guard
J. Stromer, Triton Submarines
M. R. Walters, Oceaneering International, Inc.
J. Witney, Atlantis Submarines International
H. Pauli, *Delegate*, Germanischer Lloyd AG
L. Cross, *Alternate*, Kemper Engineering Services, LLC
D. Lawrence, *Alternate*, U.S. Coast Guard
W. F. Crowley, Jr., *Contributing Member*, Aerospace & Undersea Support Services, LLC
T. R. Galloway, *Contributing Member*, Naval Sea Systems Command
K. K. Kemper, *Contributing Member*, Kemper Engineering Services, LLC
R. M. Webb, *Contributing Member*, Naval Sea Systems Command

SUBCOMMITTEE ON VIEWPORTS

B. Kemper, *Chair*, Kemper Engineering Services, LLC
J. Witney, *Vice Chair*, Atlantis Submarines International
E. Lawson, *Secretary*, The American Society of Mechanical Engineers
G. Bryant, Consultant
B. Faircloth, FMS Engineering, LLC
D. R. Hurd, Atlantis Submarines International
W. Kohnen, Hydrospace Group, Inc.
D. Lawrence, U.S. Coast Guard
D. A. Renear, Aqua-Air Industries, Inc.
G. Richards, Blanson, Ltd.
R. C. Smith, Naval Facilities Engineering Command, Ocean Facilities Program
J. Stromer, Triton Submarines
D. Talati, Sechrist Industries, Inc.
R. Thomas, American Bureau of Shipping
L. Cross, *Alternate*, Kemper Engineering Services, LLC
J. K. Martin, *Alternate*, Perry Technologies
M. W. Allen, *Contributing Member*, Microbaric Oxygen Systems, LLC
K. K. Kemper, *Contributing Member*, Kemper Engineering Services, LLC

ASMENORMDOC.COM : Click to view the full PDF of ASME PVHO-1 2019

CORRESPONDENCE WITH THE PVHO COMMITTEE

General. ASME Standards are developed and maintained with the intent to represent the consensus of concerned interests. As such, users of this Standard may interact with the Committee by requesting interpretations, proposing revisions or a case, and attending Committee meetings. Correspondence should be addressed to:

Secretary, PVHO Standards Committee
The American Society of Mechanical Engineers
Two Park Avenue
New York, NY 10016-5990
http://go.asme.org/Inquiry

Proposing Revisions. Revisions are made periodically to the Standard to incorporate changes that appear necessary or desirable, as demonstrated by the experience gained from the application of the Standard. Approved revisions will be published periodically.

The Committee welcomes proposals for revisions to this Standard. Such proposals should be as specific as possible, citing the paragraph number(s), the proposed wording, and a detailed description of the reasons for the proposal, including any pertinent documentation.

Proposing a Case. Cases may be issued to provide alternative rules when justified, to permit early implementation of an approved revision when the need is urgent, or to provide rules not covered by existing provisions. Cases are effective immediately upon ASME approval and shall be posted on the ASME Committee web page.

Requests for Cases shall provide a Statement of Need and Background Information. The request should identify the Standard and the paragraph, figure, or table number(s), and be written as a Question and Reply in the same format as existing Cases. Requests for Cases should also indicate the applicable edition(s) of the Standard to which the proposed Case applies.

Interpretations. Upon request, the PVHO Standards Committee will render an interpretation of any requirement of the Standard. Interpretations can only be rendered in response to a written request sent to the Secretary of the PVHO Standards Committee.

Requests for interpretation should preferably be submitted through the online Interpretation Submittal Form. The form is accessible at http://go.asme.org/InterpretationRequest. Upon submittal of the form, the Inquirer will receive an automatic e-mail confirming receipt.

If the Inquirer is unable to use the online form, he/she may mail the request to the Secretary of the PVHO Standards Committee at the above address. The request for an interpretation should be clear and unambiguous. It is further recommended that the Inquirer submit his/her request in the following format:

Subject: Cite the applicable paragraph number(s) and the topic of the inquiry in one or two words.

Edition: Cite the applicable edition of the Standard for which the interpretation is being requested.

Question: Phrase the question as a request for an interpretation of a specific requirement suitable for general understanding and use, not as a request for an approval of a proprietary design or situation. Please provide a condensed and precise question, composed in such a way that a "yes" or "no" reply is acceptable.

Proposed Reply(ies): Provide a proposed reply(ies) in the form of "Yes" or "No," with explanation as needed. If entering replies to more than one question, please number the questions and replies.

Background Information: Provide the Committee with any background information that will assist the Committee in understanding the inquiry. The Inquirer may also include any plans or drawings that are necessary to explain the question; however, they should not contain proprietary names or information.

ASMENORMDOC.COM : Click to view the full PDF of ASME PVHO-1 2019

Requests that are not in the format described above may be rewritten in the appropriate format by the Committee prior to being answered, which may inadvertently change the intent of the original request.

Moreover, ASME does not act as a consultant for specific engineering problems or for the general application or understanding of the Standard requirements. If, based on the inquiry information submitted, it is the opinion of the Committee that the Inquirer should seek assistance, the inquiry will be returned with the recommendation that such assistance be obtained.

ASME procedures provide for reconsideration of any interpretation when or if additional information that might affect an interpretation is available. Further, persons aggrieved by an interpretation may appeal to the cognizant ASME Committee or Subcommittee. ASME does not "approve," "certify," "rate," or "endorse" any item, construction, proprietary device, or activity.

Attending Committee Meetings. The PVHO Standards Committee regularly holds meetings and/or telephone conferences that are open to the public. Persons wishing to attend any meeting and/or telephone conference should contact the Secretary of the PVHO Standards Committee.

ASMENORMDOC.COM : Click to view the full PDF of ASME PVHO-1 201

ASME PVHO-1–2019
SUMMARY OF CHANGES

Following approval by the ASME PVHO-1 Committee and ASME, and after public review, ASME PVHO-1–2019 was approved by the American National Standards Institute on December 4, 2019.

ASME PVHO-1–2019 includes the following changes identified by a margin note, **(19)**.

Page	*Location*	*Change*
2	1-7.1	Subparagraphs (c)(1) through (c)(3) revised
3	1-7.8	Subparagraph (c) added
4	1-7.9	Subparagraph (k) revised
8	1-7.14	Subparagraph (f) added
10	1-12	Added
12	1-13	Added
12	1-14	Added
19	2-2.1	Revised
24	2-2.8.3	Title revised
32	2-3.8	(1) First paragraph and subpara. (a) revised (2) In subpara. (b), second sentence corrected by errata to read "acrylic plastic weighing about"
32	2-3.11	Added
34	2-5.4.1	Added
35	2-6.1	Revised
36	2-7.3	Revised
42	PVHO-1 Form VP-2	Revised
89	4-1.2	(1) Former para. 4-1.2.3 redesignated as subpara. 4-1.2.2(c) (2) Paragraph 4-1.2.4 redesignated as para. 4-1.2.3 (3) Paragraph 4-1.2.5 deleted
101	Table 4-7.1-1	General Note (b) corrected by errata to read MT
103	5-1.4	Revised in its entirety
104	5-1.9	Added
104	5-2	Revised
104	5-3.2	First paragraph revised
106	Section 6	Revised in its entirety
128	Mandatory Appendix II	(1) Definitions of *air-ventilated PVHO, fabricator, manufacturer, material manufacturer, Professional Engineer,* and *systems integrator* added (2) Definitions of *fabricator of windows, manufacturer (component), manufacturer of plastic (window),* and *manufacturer (PVHO)* deleted (3) Definition of *risk* corrected by errata to read occurrence
139	Nonmandatory Appendix D	Title revised
139	D-2	Revised

ASMENORMDOC.COM : Click to view the full PDF of ASME PVHO-1 2019

Page	*Location*	*Change*
146	Nonmandatory Appendix E	Title revised
146	E-1.1	Revised
147	E-2.2	Fourth paragraph revised
149	E-2.8	Third paragraph revised
149	E-3	(1) Paragraph E-3.1 revised (2) Paragraph E-3.4 deleted
152	E-4.12	Subparagraph (f) revised
172	Table E-1.1-1	Added
176	Nonmandatory Appendix F	(1) Title for MIL-H-2815 added (2) Addresses updated (3) Publications from Naval Ordnance Safety and Security Activity and U.S. Department of Health and Human Services added

ASMENORMDOC.COM : Click to view the full PDF of ASME PVHO-1 2019

INTENTIONALLY LEFT BLANK

ASMENORMDOC.COM : Click to view the full PDF of ASME PVHO-1 2019

Section 1
General Requirements

1-1 INTRODUCTION

This Standard defines the requirements that are applicable to all Pressure Vessels for Human Occupancy (PVHOs) fabricated to this Standard (Sections 1 through 4) and shall be used in conjunction with specific requirements in other Sections (Sections 5 through 7, as applicable) and Mandatory Appendices of this Standard. In the event of conflict between Sections 1 through 4 and other Sections (5 through 7), the application-specific requirements from Sections 5 through 7 shall govern.

PVHOs shall be designed, fabricated, inspected, tested, marked, and stamped in accordance with the requirements of this Standard and of the ASME Boiler and Pressure Vessel Code (ASME BPVC), Section VIII, Division 1 or Division 2, unless otherwise permitted within this Standard.

In-service requirements for PVHOs are found in ASME PVHO-2.

1-2 SCOPE

1-2.1 Application

This Standard applies to all pressure vessels that enclose a human within their pressure boundary while under internal or external pressure exceeding a differential pressure of 2 psi (15 kPa). PVHOs include, but are not limited to, submersibles, diving bells, and personnel transfer capsules, as well as decompression, recompression, hypobaric, and hyperbaric PVHOs.

1-2.2 Geometry

The scope of this Standard in relation to the geometry is the pressure boundary as defined in the User's Design Specification and shall include, but not be limited to, the following:

(a) shells of revolution
(b) openings and their reinforcements
(c) nozzles and other connections
(d) flat heads
(e) quick-actuating closures
(f) vessel penetrations
(g) attachments and supports
(h) access openings
(i) viewports
(j) pressure relief devices
(k) pressure-retaining covers for vessel openings

1-2.3 Limitations

The pressure boundary of the PVHO shall be as follows:

(a) welding end connection for the first circumferential joint for welded connections
(b) the first threaded joint for screwed connections
(c) the face of the first flange for bolted, flanged connections
(d) the first sealing surface for proprietary connections or fittings

1-3 EXCLUSIONS

The following types of vessels are excluded from this Standard:

(a) nuclear reactor containments
(b) pressurized airplane cabins
(c) aerospace vehicle cabins
(d) caissons

1-4 USER REQUIREMENTS

It is the responsibility of the user, or an agent acting for the user who intends that a PVHO be designed, fabricated, inspected, tested, marked, stamped, and certified to be in compliance with this Standard, to provide or cause to be provided for such PVHO, a User's Design Specification. The User's Design Specification shall set forth the intended operating conditions of the PVHO to provide the basis for design. It shall identify the external environment to which the PVHO will be exposed, the intended function of the PVHO, mechanical loads imposed on the PVHO, specific installation requirements, and applicable codes and standards.

1-5 MANUFACTURER'S DATA REPORT

The manufacturer or a designated agent shall make design calculations and prepare a Manufacturer's Data Report stating that the design, as shown on the design drawings, complies with this Standard and the User's Design Specification.

A registered Professional Engineer, or the equivalent in other countries, shall certify that the Manufacturer's Data Report is in compliance with this Standard and the User's Design Specification.

ASMENORMDOC.COM : Click to view the full PDF of ASME PVHO-1 2019

1-6 MATERIALS

All PVHO materials shall meet the requirements of this Standard.

Pressure vessel metallic material shall meet the specified Division of Section VIII of the ASME BPVC. Nonstandard materials shall be qualified for use as defined in Nonmandatory Appendix D. The following materials shall not be used for pressure parts: SA-36, SA-283, SA-515, and cast and ductile iron.

Ferrous materials for PVHOs shall also comply with the following requirements:

(a) Except as provided for in (b), (c), (d), or (e), drop-weight tests in accordance with ASTM E208 shall be made on all wrought and cast ferrous materials. For plates, one drop-weight test (two specimens) shall be made for each plate in the as-heat-treated condition. For product forms other than plate, one drop-weight test (two specimens) shall be made for each heat in any one treatment lot. The sampling procedure for each form of material shall comply with the requirements of the specifications listed in ASME BPVC, Section VIII, Division 1, Table UG-84.3 or Section VIII, Division 2, para. 3.10.4, as applicable. The test shall be conducted at a temperature 30°F (17°C) lower than the minimum temperature for seamless and postweld heat-treated vessels, and 50°F (28°C) lower for as-welded vessels. The two specimens shall both exhibit no-break performance.

(b) When, due to the material thickness or configuration, drop-weight specimens cannot be obtained, Charpy V-notch tests shall be conducted. The Charpy V-notch test of each material shall comply with the requirements of the applicable material specification or, when none is given, shall comply in all respects with the requirements of the applicable product form specifications listed in ASME BPVC, Section VIII, Division 1, Table UG-84.3 or Section VIII, Division 2, para. 3.10.4, as applicable. For either case, the test temperature shall not be higher than that specified in (a).

(c) As an alternative to the requirements of (a), those materials listed in ASME BPVC, Section II, Part A, SA-20, Table A1.15 may be accepted on the basis of Charpy V-notch testing. Testing shall be in accordance with the procedures contained in the specified Division of ASME BPVC, Section VIII, except that the acceptance criteria for plate shall be from each plate as heat treated. The test temperature shall not be higher than that specified in (a) regardless of the temperature shown in SA-20, Table A1.15.

(d) Ferrous materials that are 0.625 in. (16 mm) or less in thickness are exempt from the additional toughness tests of (a) through (c) provided these materials are either of the following:

(1) normalized, fully killed, and made in accordance with fine grain practice

(2) fully killed, made in accordance with fine grain practice with a grain size of 5 or finer and an operating temperature of 50°F (10°C) or higher

(e) The additional toughness tests of (a) through (c) may be waived for the 300 series stainless steels.

(f) When the material has a specified minimum yield strength exceeding 60 ksi (414 MPa), weld metal and heat-affected zone impact properties for weld procedure qualifications and weld production tests shall also meet the requirements of the specified Division of ASME BPVC, Section VIII at a test temperature 30°F (17°C) lower than the design temperature, regardless of the value of the minimum design metal temperature.

PVHOs constructed of ferrous materials that are exposed to the corrosive effects of marine environments shall have provisions made for the desired life by a suitable increase in the thickness of the material over that required by the design procedures, or by using some other suitable method of protection.

1-7 DESIGN AND FABRICATION REQUIREMENTS

1-7.1 Joint Design (19)

The design and fabrication shall be in accordance with the specified Division of ASME BPVC, Section VIII and the following requirements common to all PVHOs, unless otherwise permitted within this Standard:

(a) All joints of Categories A through C shall be Type No. 1 of Table UW-12 for ASME BPVC, Section VIII, Division 1 vessels or shall be weld joint Type 1 of Table 4.2.2 and meet the requirements of para. 6.2.4.1 for ASME BPVC, Section VIII, Division 2 vessels.

(b) All joints of Category D shall be full-penetration welds extending through the entire thickness of the vessel or nozzle wall and shall be Type No. 1 or Type No. 7 of Table UW-12 for ASME BPVC, Section VIII, Division 1 vessels or weld joint Type 1 or Type 7 of Table 4.2.2 for ASME BPVC, Section VIII, Division 2 vessels. Backing strips shall be removed.

(c) Intermediate heads may be designed in accordance with Figure UW-13.1(e) for ASME BPVC, Section VIII, Division 1 vessels only when the following conditions are met:

(1) The allowable stress used in the calculations for the intermediate head and for the shell that the intermediate head is attached to shall be 70% or less of the allowable stress found in ASME BPVC, Section II, Part D. This reduced allowable stress shall apply to the shell only for a distance measured parallel along the shell of $2.5(R_m t_s)^{1/2}$ from the centerline of the butt weld to either side (t_{s1} or t_{s2}) [reference ASME BPVC, Section VIII, Division 1, Figure UW-13.1(e)]. R_m and t_s are the shell mean radius and thickness (in inches or millimeters), respectively, for the shell section under consideration.

ASMENORMDOC.COM : Click to view the full PDF of ASME PVHO-1 2019

(2) The flange of the intermediate head shall be at least $1\frac{1}{2}$ in. (38 mm) long and shall be welded to the shell with a minimum fillet weld of $t_h/2$ or $\frac{1}{4}$ in. (6.4 mm), whichever is less.

(3) The allowable stress value for the butt weld shall be 70% or less of the allowable stress value for the vessel material. The allowable stress value for the fillet weld shall be 55% or less of the allowable stress value for the vessel material [reference ASME BPVC, Section VIII, Division 1, UW-13(c)(2)].

(4) In addition to the strength requirements of para. 1-7.1, stiffener rings or other attachments exposed to a corrosive environment shall be seal welded by welds that are continuous on all sides.

1-7.2 Welding

Pressure vessel welding shall be performed in accordance with ASME BPVC, Section IX.

1-7.3 Nondestructive Testing

All nondestructive testing shall conform to ASME BPVC, Section V.

(a) All Type No. 1 butt welds shall be 100% radiographed. All Type No. 7 corner welds shall be 100% ultrasonically examined. Both the above radiographic and ultrasonic inspections shall be performed in accordance with the specified Division of ASME BPVC, Section VIII.

(b) PVHO vessels that incorporate an intermediate head per para. 1-7.1(c) shall be inspected as follows:

(1) The butt weld joint shall be 100% radiographed and 100% ultrasonic examined per the requirements of ASME BPVC, Section VIII, Division 1 or Division 2.

(2) The butt weld, fillet weld, and/or seal weld shall be examined after hydrostatic test in accordance with (d).

(c) The reverse side of the root pass of double-welded joints shall be sound. This shall be shown by magnetic particle (MT) or liquid penetrant (PT) examination. If necessary, chipping, grinding, or melting-out may be required to ensure sound metal. Weld metal shall then be applied from the reverse side.

(d) After hydrostatic tests, all pressure-retaining welds and/or seal welds shall be examined in accordance with the requirements for either MT examination (ASME BPVC, Section V, Article 7) or PT testing (ASME BPVC, Section V, Article 6). The acceptance criteria shall be those of the applicable requirements of the specified Division of ASME BPVC, Section VIII.

1-7.4 Electrical Outfitting

All electrical penetrators through the pressure boundary shall be suitable for the environment in which they will operate in order to minimize the risk of fire, explosion, electric shock, emission of toxic fumes to personnel, and galvanic action on the pressure boundary.

Electrical penetrators and equipment shall not be damaged by pressurization and depressurization of the PVHO to operating pressures.

1-7.5 Viewports

Viewports shall conform to Section 2.

1-7.6 Penetrations

Penetrations of the pressure boundary shall comply with the following:

(a) Penetrators shall be constructed of material suitable for the intended service and compatible with the vessel shell material.

(b) Penetrators shall be either of standard piping components or of a port and insert construction. See Nonmandatory Appendix B, Figures B-2-1 and B-3-1.

(c) Where a penetrator is of the port and insert construction, the insert shall be constructed of ASME PVHO material.

(d) Sealing surfaces of elastomer-sealed penetrators shall be protected from corrosion effects.

(e) Penetrators incorporating piping or commercial components shall be rated by the manufacturer to be suitable for the intended design pressure and temperature, and meet the testing requirements of para. 1-7.8.

(f) Penetrators and inserts shall be tested in accordance with para. 1-7.8.

Portions of the insert that become part of the pressure boundary shall be tested to the same pressure required for the PVHO. Portions of the insert that are subject to greater pressure than the pressure boundary shall be tested in accordance with the requirements of Section 4.

(g) Except as permitted in (e), penetrations of the pressure boundary including piping, windows, manways, and service locks shall conform to the reinforcement requirements of ASME BPVC, Section VIII, Division 1 or Division 2. Plate material used as reinforcement shall meet the requirements of ASME BPVC, Section VIII, Division 1, Mandatory Appendix 20 or Section VIII, Division 2, section 3.9.

1-7.7 Inspection

All PVHOs and processes used in their manufacture shall be inspected in accordance with the manufacturer's quality assurance system, in accordance with Section 3.

1-7.8 Testing (19)

All PVHOs and pressure-retaining components of PVHOs shall demonstrate structural integrity through testing as follows:

(a) All internally pressurized vessels shall be tested according to the applicable Section of this Standard and/or the specified Division of ASME BPVC, Section VIII.

(b) Unless otherwise stated in this Standard, all externally pressurized vessels, regardless of the design rules used, shall be subjected to an external pressure test to

ASMENORMDOC.COM : Click to view the full PDF of ASME PVHO-1 2019

a differential pressure not less than 1.25 times the maximum allowable working pressure (MAWP). The test pressure shall be maintained for not less than 1 hr. The differential test pressure may be achieved by a combination of internal and external test pressures.

(c) For hydrotest of vacuum only, or altitude (hypobaric) chambers, per ASME BPVC (2017 Edition), Section VIII, Division 1, UG-99(f), a vacuum test of 1.25 times the maximum allowable altitude shall be conducted and maintained for a minimum of 1 hr, provided the following tests have been performed:

(1) The pressure vessel shall be tested in accordance with ASME BPVC (2017 Edition), Section VIII, Division 1, UG-99(f).

(2) Windows shall be tested according to subsection 2-7.

(19) **1-7.9 Documentation**

The manufacturer (PVHO) shall provide the owner/user or his/her designated agent a copy of the Manufacturer's Data Report [PVHO-1 Form GR-1 (PVHO-1 Form GR-1S)] and Forms U-1 and U-2 (Division 1) or Forms A-1 and A-2 (Division 2), as applicable, for PVHOs built to ASME BPVC, Section VIII. The manufacturer (PVHO) shall retain a copy of the Manufacturer's Data Report (PVHO-1 Form GR-1); applicable ASME BPVC, Section VIII forms; and all viewport-supporting documents per Section 2 on file for at least 10 yr from the date of manufacture. Nondestructive testing documentation shall meet the requirements of ASME BPVC, Section V. In addition to the aforementioned documentation, the manufacturer (PVHO) shall furnish the following documentation to the user or his/her designated agent:

(a) instructions critical to the maintenance of the PVHO

(b) instructions critical to the operation of the PVHO and subsystems (operating procedures)

(c) coating/painting information

(d) photocopy or equivalent of the PVHO data plate

(e) list of standards used

(f) seal and gasket sizes and materials

(g) User's Design Specification

(h) evidence of successful completion of test(s) required in para. 1-7.8

(i) system schematics (life support, hydraulics, electrical, communications, etc.)

(j) system descriptions (life support, hydraulics, electrical, communications, etc.)

(k) assembly drawings, including viewport assembly drawings that provide the general dimensions, seat and seal configuration, and retainer ring and fastener details

(l) equipment documentation (technical manuals, catalog cuts, etc.)

1-7.10 Piping

Unless otherwise permitted within this Standard, piping shall conform to the requirements of Section 4 of this Standard.

1-7.11 Opening Reinforcements

All opening reinforcements shall be integral with the nozzle and/or shell. Reinforcement pads are not permitted.

1-7.12 Brazed or Riveted Construction

Brazed or riveted construction is prohibited on the pressure boundary.

1-7.13 Alternative Design Rules for External Pressure Vessels

1-7.13.1 General. This subsection provides alternative rules to those given in ASME BPVC, Section VIII, Division 1 or Division 2 for determining allowable compressive stresses and associated allowable external pressure for unstiffened and ring-stiffened circular cylinders, and the minimum required thickness for unstiffened spheres and spherical and ellipsoidal heads. The use of these alternative rules may result in a pressure vessel design that is lighter weight than that using the rules of ASME BPVC, Section VIII, Division 1 or Division 2. When used, this subsection shall be made applicable to the entire vessel.

The hull design shall consider all load conditions in addition to external pressure loadings. These load conditions shall include, but are not limited to, those specified in ASME BPVC, Section VIII, Division 1 or Division 2.

The cylinder geometry is illustrated in Figure 1-7.13.1-1 and the stiffener geometries in Figure 1-7.13.1-2. The effective sections for ring stiffeners are shown in Figure 1-7.13.1-3.

Use of these rules requires the shell section to be axisymmetric. Except for local reinforcement, these rules are based on a uniform thickness of the shell section. Where locally thickened shell sections exist, the thinnest uniform thickness in the adjacent shell section shall be used.

The reinforcement for openings in vessels that do not exceed 10% of the cylinder or head diameter or 80% of the ring spacing into which the opening is placed may be designed in accordance with the requirements of ASME BPVC, Section VIII, Division 1, UG-37(d)(1) or Division 2, 4.5.17 for openings in cylindrical shells and Division 2, 4.5.10 and 4.5.11, as applicable, for openings in spherical and formed heads. The required thickness shall be determined in accordance with para. 1-7.13.4. The factor, *F*, used in ASME BPVC, Section VIII, Division 1, UG-37(c) shall be 1.0. Openings in shells that exceed these limitations require a special design based on a finite element

ASMENORMDOC.COM : Click to view the full PDF of ASME PVHO-1 2019

analysis of the opening and surrounding shell and stiffeners. The required thickness of the reinforcement shall be sufficient to reduce the von Mises stress at the edge of the reinforcement to the von Mises stress in a region distant from the reinforcement. This distant region is typically at unpenetrated regions of a spherical shell, unstiffened cylindrical shell, or midbay in stiffened cylinders. If the von Mises stress at the edge of the reinforcement exceeds that at the distant region, the allowable external pressure shall be decreased by the ratio of the distant region stress to reinforcement edge stress.

For stiffened cylinders, special consideration shall be given to ends of members (shell sections) as follows: the von Mises stress at midbay at the end segment shall not exceed 105% of the midbay stress away from the effects of the end.

Special consideration shall also be given to areas of load application where stress distribution may be nonlinear and localized stresses may exceed those predicted by linear theory. When the localized stresses extend over a distance equal to one-half the buckling mode (approximately $1.2\sqrt{D_o t}$), the localized stresses should be considered as a uniform stress around the full circumference. Additional stiffening may be required.

All calculations shall be performed using all dimensions in the corroded condition.

1-7.13.2 Nomenclature

A_1 = cross-sectional area of small ring plus shell area equal to $L_s t$, in.^{2}

A_2 = cross-sectional area of large ring plus shell area equal to $L_s t$, in.^{2}

A_F = cross-sectional area of a large ring stiffener that acts as a bulkhead, in.^{2}

A_S = cross-sectional area of a ring stiffener, in.^{2}

C = a factor used to determine minimum shell thickness and length of the template used in checking local shell deviations

c = distance from neutral axis of cross section to point under consideration, in.

D_o = outside diameter of cylinder, in.

E = modulus of elasticity of material at design temperature, determined from the applicable material chart in ASME BPVC, Section II, Part D, Subpart 2, ksi. The applicable material chart is given in ASME BPVC, Section II, Part D, Subpart 1, Tables 1A and 1B, Tables 2A and 2B, or Tables 5A and 5B. Use linear interpolation for intermediate temperatures.

e = maximum plus or minus deviation from a true circular form, in.

e_x = local deviation from a straight line measured along a meridian over a gauge length, L_x, in.

F_{ha} = allowable hoop compressive membrane stress of a cylinder or formed head under external pressure alone, ksi

F_{he} = elastic hoop compressive membrane failure stress of a cylinder or formed head under external pressure alone, ksi

F_{hef} = average value of the hoop buckling stresses, F_{he}, over length L_F, where F_{he} is determined from para. 1-7.13.4(c), ksi

F_y = yield strength of material at design metal temperature from applicable table in ASME BPVC, Section II, Part D, Subpart 1, ksi

FS = stress reduction factor or design factor

h_1 = the full width of a flat bar stiffener or outstanding leg of an angle stiffener, or one-half of the full width of the flange of a tee stiffener, in.

h_2 = the full depth of a tee section or full width of an angle leg, in.

I = moment of inertia of full cross section
= $\pi R^3 t$, in.^{4}

I_F = moment of inertia of large ring that acts as a bulkhead about its centroidal axis, in.^{4}

I_s = moment of inertia of ring stiffener about its centroidal axis, in.^{4}

I_s' = moment of inertia of ring stiffener plus effective length of shell about centroidal axis of combined section, in.^{4}

$$= I_s + A_s Z_s^2 [L_e t/(A_s + L_e t)] + L_e t^3/12$$

L, L_1, L_2, L_3, L... = design length of unstiffened vessel section between lines of support, in. A line of support is

(a) a circumferential line on a head (excluding conical heads) at one-third the depth of the head from the head tangent line as shown in Figure 1-7.13.1-1

(b) a stiffening ring that meets the requirements for I_s' in para. 1-7.13.4(d)

L_B, L_{B1}, L_{B2}, L_B... = length of cylinder between bulkheads or large rings designed to act as bulkheads, in.

L_c = chord length of template used to measure deviation from nominal circularity, in.

L_e = effective length of shell, in. (see Figure 1-7.13.1-3). For small ring, $L_e = 1.1(D_o t)^{1/2}$. For large ring acting as a bulkhead, $L_e = 1.1(D_o t)^{1/2}(A_1/A_2)$.

L_F = one-half of the sum of the distances, L_B, from the centerline of a large ring to the next large ring or head line of support on either side of the large ring, in. (see Figure 1-7.13.1-1)

ASMENORMDOC.COM : Click to view the full PDF of ASME PVHO-1 2019

L_s = one-half of the sum of the distances from the centerline of a stiffening ring to the next line of support on either side of the ring, measured parallel to the axis of the cylinder, in. A line of support is described in the definition for L (see Figure 1-7.13.1-1), in.

L_t = overall length of vessel as shown in Figure 1-7.13.1-1, in.

L_x = gauge length measured along meridian of cylinder, in.

M_L = $L_F/\sqrt{R_o t}$

M_x = $L/\sqrt{R_o t}$

P = external design pressure, ksi

P_a = allowable external pressure in the absence of other loads, ksi

PT = external test pressure, equal to 1.25P, ksi

R = radius to centerline of shell, in.

R_c = radius to centroid of combined ring stiffener and effective length of shell, in.
= $R + Z_c$

R_o = radius to outside of shell, in.

t = thickness of shell, less corrosion allowance, in.

t_1 = thickness of the bar, leg of angle, or flange of tee of stiffener, in.

t_2 = thickness of the web or angle leg of stiffener, in.

Z_c = radial distance from centerline of shell to centroid of combined section of ring and effective length of shell, in.
= $A_s Z_s / (A_s + L_e t)$

Z_s = radial distance from centerline of shell to centroid of ring stiffener (positive for outside rings), in.

1-7.13.3 Materials

(a) Allowable Materials. Pressure vessels subjected to external pressure may be fabricated from steel materials, with exceptions as noted, listed in ASME BPVC, Section VIII, Division 1, Tables UCS-23, UHA-23, and UHT-23 or Division 2, Tables 3.A.1 through 3.A.3. Materials not acceptable for use for pressure parts are identified in subsection 1-6. General requirements for materials are listed in subsection 1-6.

(b) Postweld Heat Treatment (PWHT) Requirements. The fabricated vessel shall be postweld heat treated in accordance with the requirements of ASME BPVC, Section VIII, Parts UCS, UHA, and UHT for a Division 1 design or paras. 6.4 and 6.6 of the ASME BPVC for a Division 2 design. In addition, spherical shells and spherical segment heads shall be postweld heat treated regardless of thickness. The PWHT shall be done prior to the external pressure test.

1-7.13.4 Stiffened and Unstiffened Cylinders

(a) Limitations. For PVHOs not conforming to the following limitations, the external pressure design shall be as required by the specified Division of ASME BPVC, Section VIII.

(1) The minimum outside diameter to thickness ratio (D_o/t) is restricted to 1,000.

(2) The maximum shell thickness, including corrosion allowance, shall not exceed 2 in. (50 mm).

(3) The minimum shell thickness, excluding corrosion allowance, shall not be less than $^3/_8$ in. (10 mm).

(b) Stress Reduction Factors. The allowable stress is determined by applying a stress reduction factor, FS, to the predicted elastic buckling stress, F_{ic}. The required values of FS are 2.0 when the buckling stress is elastic and $^5/_3$ when the buckling stress equals yield stress at design temperature. A linear variation is used between these limits. The equations for FS are as follows:

$$\begin{aligned} FS &= 2.0 \text{ if } F_{ic} \le 0.55F_y \\ &= 2.407 - 0.741\, F_{ic}/F_y \text{ if } 0.55\, F_y < F_{ic} < F_y \\ &= 1.667 \text{ if } F_{ic} \ge F_y \end{aligned}$$

Note that F_{ic} is the predicted buckling stress that is calculated using FS = 1 in the allowable stress equations in (c).

(c) Allowable Stress and External Pressure for Cylindrical Shells. The allowable external pressure in the absence of other loads, P_a, calculated using these rules shall be greater than or equal to the external design pressure, P, i.e., $P_a \ge P$.

The allowable external pressure for stiffened and unstiffened cylindrical shells is given by the following equation:

$$P_a = \text{minimum of } P_1 \text{ and } P_2$$

where

$$\begin{aligned} P_1 &= 2F_{ha}(t/D_o) \\ P_2 &= 1.067F_y(t/D_o) \end{aligned}$$

The allowable external pressure is based on a circumferential compressive stress that is the lesser of F_{ha} and $^2/_3F_y$ at a hydrostatic test pressure of 1.25P, where

$$\begin{aligned} F_{ha} &= F_y/FS \text{ if } F_{he}/F_y \ge 2.439 \\ &= (0.7F_y/FS)\,(F_{he}/F_y)^{0.4} \text{ if } 0.552 < F_{he}/F_y < 2.439 \\ &= F_{he}/FS \text{ if } F_{he}/F_y \le 0.552 \end{aligned}$$

and where

$$\begin{aligned} C_h &= 0.55(t/D_o) \text{ if } M_x \ge 2(D_o/t)^{0.94} \\ &= 1.12\, M_x^{-1.058} \text{ if } 13 < M_x < 2(D_o/t)^{0.94} \\ &= 0.92\, /\, (M_x - 0.579) \text{ if } 1.5 < M_x \le 13 \\ &= 1.0 \text{ if } M_x \le 1.5 \\ F_{he} &= 1.6C_hE(t/D_o) \end{aligned}$$

(d) Sizing of Stiffener Rings

(1) Small Rings

ASMENORMDOC.COM : Click to view the full PDF of ASME PVHO-1 2019

$$I_s' \geq 1.5F_{he}L_sR_c{}^2t/E(n^2 - 1)$$

where F_{he} is the stress determined from (c) with $M_x = M_s$

$$n^2 = 2D_o{}^{3/2}/3L_Bt^{1/2}$$

Use $n = 2$ for $n^2 < 4$ and $n = 10$ for $n^2 > 100$.

(2) Large Ring Acting as a Bulkhead

$$I_s' \geq F_{hef}L_FR_c{}^2t/2E$$

where F_{hef} is F_{he}, which is the stress determined from (c) with $M_x = M_L$. The terms I_s, A_s, and Z_s in the equation for I_s' are those associated with the large ring geometry, such as I_F and A_F.

(3) Stiffener Geometry Requirements. Stiffener geometry requirements are as follows. See Figure 1-7.13.1-2 for stiffener geometry and definition of terms.

(-a) Flat bar stiffener, flange of a tee stiffener, and outstanding leg of an angle stiffener

$$h_1/t_1 \leq 0.375\left(E/F_y\right)^{1/2}$$

(-b) Web of a tee stiffener or leg of an angle stiffener attached to the shell

$$h_2/t_2 \leq 1.0\left(E/F_y\right)^{1/2}$$

(e) Tolerances for Cylindrical Shells Subjected to External Pressure. Cylindrical shells shall meet the tolerances as specified herein. These tolerance requirements replace some portions of those specified in ASME BPVC, Section VIII, Division 1, UG-80(b) or Division 2, 4.4.4. In place of the maximum deviation requirements specified in ASME BPVC, Section VIII, Division 1, UG-80(b)(2) or Division 2, 4.4.4.1(b), the following requirements apply:

(1) The maximum plus or minus deviation from a true circular form, e, shall not exceed the value given by the following equation:

$$e = 0.0165t(M_x + 3.25)^{1.069}$$

Note that e need not be less than $0.2t$ and shall not exceed the lesser of $0.0242R$ or $2t$.

(2) Measurements to determine e shall be made from a segmental circular template having the design outside radius and placed on the outside of the shell. The chord length, L_c, is given by the following equation:

$$L_c = 2R\sin(\pi/2n)$$

where

$$n = c\left[\sqrt{(R/T)}/(L/R)\right]^d$$

$$c = 2.28(R/t)^{0.54} \leq 2.80$$
$$d = 0.38(R/t)^{0.044} \leq 0.485$$

and

$$2 \leq n \leq 1.41\sqrt{(R/T)}$$

(3) All requirements of ASME BPVC, Section VIII, Division 1, UG-80(a) or Division 2, 4.3.2.1 are applicable. The requirements of ASME BPVC, Section VIII, Division 1, UG-80(b)(3), (b)(6) through (b)(8), and (b)(10) or Division 2, 4.4.4.1(c) and 4.4.4.1(e) through 4.4.4.1(h) remain applicable.

(4) The local deviation from a straight line, e_x, measured along a meridian over a gauge length, L_x, shall not exceed the maximum permissible deviation, e_x, given below.

$e_x = 0.002R$

$L_x = 4\sqrt{(Rt)}$ but not greater than L for cylinders

$= 25t$ across circumferential welds

$L_x < 95\%$ of the meridional distance between circumferential welds.

1-7.13.5 Minimum Required Thickness for Unstiffened Spheres and Formed Heads

(a) Limitations. The allowable pressure for spheres and spherical segments is derived using the following iterative procedure. This procedure applies to spheres and hemispherical formed heads directly.

An adjustment is made for 2:1 ellipsoidal heads. These rules do not apply to other shaped ellipsoidal or to torispherical heads. For PVHOs not conforming to these and the following limitations, the external pressure design shall be as required by the specified Division of ASME BPVC, Section VIII.

(1) The maximum outside radius, R_o, shall not exceed 60 in. (1 500 mm).

(2) The maximum shell thickness, including corrosion allowance, shall not exceed 2 in. (50 mm).

(3) The minimum shell thickness, excluding corrosion allowance, shall not be less than ⅜ in. (10 mm).

(b) 2:1 Ellipsoidal Heads. For 2:1 ellipsoidal heads, use the procedure specified in (c) using

$$R_o = 0.9D_o$$

(c) Minimum Thickness. The minimum required thickness for the spherical shell or formed head exclusive of corrosion allowance shall be determined by the following procedure:

Step 1. Calculate the value of C from the following two equations:

C = the larger of C_1 or C_2

$$C_1 = \frac{0.75PT}{F_y}$$

$$C_2 = \sqrt{\frac{1.79PT}{E}}$$

ASMENORMDOC.COM : Click to view the full PDF of ASME PVHO-1 2019

Step 2. Enter the left ordinate of Figure 1-7.13.5-1 with the value of C calculated in Step 1. Move horizontally to an intersection with the solid curve. Extrapolation beyond the upper or lower limit of the curve is prohibited. When values of C fall outside the limits of Figure 1-7.13.5-1, the design shall follow the rules of ASME BPVC, Section VIII, Division 1, UG-28(d) or Division 2, 4.4.7.

Step 3. From the intersection obtained in Step 2, move vertically down and read the required minimum ratio of thickness to outside radius, t/R_o. This required minimum ratio applies to the spherical shell for the chosen material yield strength, elastic modulus, and test pressure.

Step 4. Determine the minimum required thickness, t, for the given outside radius, R_o. The value of t shall be neither less than $^3/_8$ in. (10 mm) nor greater than 2 in. (50 mm). If the maximum thickness of the spherical shell including corrosion allowance exceeds 2 in. (50 mm), the rules of ASME BPVC, Section VIII, Division 1, UG-28(d) or Division 2, 4.4 shall apply.

(d) Tolerances for Spherical Shells and Spherical Segments Subjected to External Pressure

(1) Out-of-Roundness. The difference between the maximum and minimum inside diameters at any cross section shall not exceed 1% of the nominal inside diameter at the cross section under consideration. The diameters may be measured on the inside or outside of the sphere. If measured on the outside, the diameters shall be corrected for the plate thickness at the cross section under consideration. When the cross section passes through an opening, the permissible difference in the inside diameters just given may be increased by 2% of the inside diameter of the opening.

(2) Local Shell Tolerances. The maximum plus or minus deviations from true spherical form, measured radially on the outside or inside of the vessel, shall not exceed 0.5% of the nominal outside radius of the spherical shell and shall not be abrupt. Measurements shall be made from a segmental template having the design inside or outside radius (depending on where the measurements are taken) and a chord length, L_C, equal to the arc length determined as follows: Using the required minimum ratio of thickness to the outside radius, t/R_o, obtained in Step 3, move vertically upward on Figure 1-7.13.5-1 to the intersection of the dashed line. Move horizontally to the right from the dashed line and determine the ratio of critical arc length to outside radius, L_c/R_o. The chord length, L_c, is obtained by multiplying this ratio by the outside radius, R_o.

1-7.13.6 Pressure Testing for Alternative Design Rules. All vessels designed in accordance with para. 1-7.13 shall be tested using the following methods:

(a) Test Pressure. The pressure vessel shall be subjected to an external hydrostatic pressure test that subjects every part of the vessel to an external pressure, PT, not less than $1.25P$, to be marked on the vessel. The test pressure shall be maintained for no less than 1 hr.

(b) Post-Test Measurements. Measurements for determining the deviations specified in paras. 1-7.13.4(e) and 1-7.13.5(d) shall be taken after the external pressure hydrostatic test.

Any deviations exceeding the limits of paras. 1-7.13.4(e) and 1-7.13.5(d) shall be corrected, and the external pressure test shall be repeated.

(c) Strain Gauging. As part of the hydrostatic test, strain gauges shall be applied to the pressure hull. Gauges shall be applied at hard spots, discontinuities, high-stress regions, and other locations deemed appropriate. Appropriate strain gauge types (single gauge or biaxial/triaxial strain gauge rosettes) shall be used at each location. A drawing(s) shall be created indicating the locations of the gauges on the pressure hull. At the conclusion of the test, a hydrostatic test report shall be created. This report shall include strain gauge locations, strain gauge type at each location, the criteria used to select the strain gauge locations, and the measured stress results. The test report shall also include a comparison of calculated and measured stresses, and an evaluation of any significant differences between these stresses. The strain gauge plan and copies of the test report shall be provided to the user and any authorities having jurisdiction.

1-7.14 Hatch Design (19)

Hatches that do not use bolts for attachment may be designed in accordance with the requirements of ASME BPVC, Section VIII, Division 1, Mandatory Appendix 1, 1-6(g) with the following conditions:

(a) The circular centerline of the spherically dished head shall pass through the centroid of the flange.

(b) The connection of the dished head to the flange shall include fillet(s) of radius not less than 10 mm.

(c) If an O-ring seal is specified, it shall be located at the mean radius of the flange.

(d) Hatch construction shall be from materials that meet ASME PVHO requirements.

(e) If the hatch is convex to pressure, the minimum thickness of the head shall be the greater of that determined in ASME BPVC, Section VIII, Division 1, Mandatory Appendix 1, 1-6(g) and that calculated from para. 1-7.13.

(f) The design of doors and hatches shall have a safety interlock system if pressure acts to open or unseat the door or hatch. The safety interlock system shall not permit pressurization of the door or hatch unless the door/hatch closure is fully engaged.

1-7.15 Rectangular Door Design

If rectangular openings are employed in ASME BPVC, Section VIII, Division 1 or Division 2 construction, a detailed analysis of the interaction of the entire assembly (i.e., door, door frame, adjacent shell, and relative

ASMENORMDOC.COM : Click to view the full PDF of ASME PVHO-1 2019

appurtenances) shall be performed to ensure the design is adequate for the intended application. For Division 2 vessels, the analysis shall be performed in accordance with ASME BPVC, Section VIII, Division 2, Part 5. For Division 1 vessels, see ASME BPVC, Section VIII, Division 1, U-2(g).

1-7.16 Supports and Attachments

Consideration shall be given to the following:

(a) The design shall consider the external local forces transmitted to the PVHO.

(b) Only those materials permitted for shells may be used for welded lifting attachments, and the material shall be compatible with that of the shell.

1-8 PRESSURE RELIEF DEVICES

Unless otherwise specified, the following requirements shall be met for pressure relief devices installed on PVHOs.

(a) The applicable requirements of ASME BPVC, Section VIII, Division 1, UG-125 through UG-136 or Section VIII, Division 2, Part 9 shall be met.

(b) A quick-operating manual shutoff valve shall be installed between the PVHO and the pressure relief valve, and shall be normally sealed open with a frangible seal as permitted in ASME BPVC, Section VIII, Division 1, UG-135(e) and Nonmandatory Appendix M, and Division 2, Annex 9.A. The valve shall be readily accessible to the attendant monitoring the operation of the PVHO.

(c) Rupture disks shall not be used, except in series upstream of pressure relief valves to prevent gas leakage, and shall meet all other applicable requirements of the ASME BPVC.

1-9 MARKING

(a) Each PVHO shall be marked with the following:

(1) designation of this Standard, PVHO-1

(2) name of the manufacturer of the pressure vessel, preceded by the words "Certified by"

(3) maximum allowable working pressure, psig (MPa gauge) (internal) and/or psig (MPa gauge) (external) at °F (°C) maximum and °F (°C) minimum

(4) manufacturer's serial number

(5) year built

(6) design criteria: PVHO-1–2019; Section(s) (e.g., 5, 6, or 7 as applicable)

(b) The marking described in para. 1-9(a) shall be on a nameplate substantially as shown in either Figure 1-9-1 or Figure 1-9-2, as applicable. It shall be of material suitable for the intended service and remain legible for the life of the vessel. Nameplates shall be located in a conspicuous place on the vessel.

(c) Nameplates shall have markings produced by casting, etching, embossing, debossing, stamping, or engraving, except that the "PVHO-1" lettering shall be stamped on the nameplate.

(1) The required marking on the nameplate shall be in characters not less than $^5/_{32}$ in. (4.0 mm) high, except the lettering "PVHO-1" shall not be less than $^3/_8$ in. (9.5 mm) high and shall be legible.

(2) Characters for metallic nameplates shall be either indented or raised at least 0.004 in. (0.10 mm).

(d) The nameplate may be marked before it is affixed to the vessel, in which case the manufacturer shall ensure that the nameplate with the correct marking has been applied to the proper vessel.

(e) The nameplate shall be permanently attached to the vessel or to a pad, bracket, or structure that is welded or soldered directly to the vessel. The nameplate shall be located within 30 in. (76 cm) of the vessel. Removal shall require willful destruction of the nameplate or its attachment system.

(f) In addition to the requirements of (a) through (d), the applicable stamping requirement of the specified Division of ASME BPVC, Section VIII shall be met.

1-10 NONMETALLIC MATERIALS AND TOXICITY OFF-GAS TESTING

(a) All nonmetallic materials off-gas volatile substances that may be toxic. The rate of off-gassing increases with increasing temperature and decreases with increasing age of the material (e.g., plastics and paint).

(b) In PVHOs whose primary means of life support is by ventilation of the atmosphere and/or by mask supply from an external gas source, off-gassed volatiles are continuously removed and are normally not of consequence, such that the procedures in (d) need not apply.

(c) In PVHOs where the primary means of life support is by addition of oxygen and removal of carbon dioxide (CO_2), off-gassed volatiles will accumulate. Thus, after fabrication and completion of all outfitting, the toxicity off-gas test procedures in (d) are required of any such PVHO that has internal paint or contains nonmetallic materials (other than acrylic windows).

(d) *Toxicity Off-Gas* Testing Procedures

(1) Internally pressurized PVHOs should be pressurized to MAWP at least once and then thoroughly ventilated prior to doing the off-gas testing.

(2) Where the normal duration of PVHO occupation is less than 8 hr, the PVHO shall be sealed and maintained at maximum operating temperature for at least 8 hr, after which time atmospheric gas samples shall be obtained from inside the PVHO and analyzed. The off-gassing test shall be performed with all openings sealed and with the PVHO at 1 atm (nominal), regardless of MAWP. However, a slight pressurization of the PVHO (prior to closing or sealing) may be used to aid in obtaining gas samples.

ASMENORMDOC.COM : Click to view the full PDF of ASME PVHO-1 2019

(3) The gas sample shall be analyzed using appropriate gas chromatography/mass spectrometry (GC/MS) methods. The concentration level of volatile compounds shall not exceed the threshold limit values (TLVs) set forth in the current edition of *ACGIH Threshold Limit Values for Chemical Substances* or the OSHA permissible exposure limits (PELs) set forth in 29 CFR 1910.1000, as stipulated by the user. If any of those limits are exceeded, the PVHO shall be well ventilated with clean air, and the procedure shall be repeated until satisfactory results are obtained.

(4) The use of higher temperatures and/or longer durations to "bake out" sources of contaminants prior to testing is permitted. Care shall be taken not to exceed the design temperature of components including acrylic windows.

(5) Where normal durations of PVHO occupation exceed 8 hr, the previous procedures apply with the exception that the PVHO shall be sealed and maintained at maximum operating temperature for at least the maximum duration of exposure anticipated. The ACGIH TLVs (or OSHA PEL values) used for evaluation shall be modified by multiplying them by a value of *Fp* as shown in Table 1-10-1 (linear interpolation is permitted).

(6) Where normal durations of PVHO occupation exceed 24 hr, the duration of off-gas may be less, provided that the quantification and reporting limits are less than the allowable limits divided by the ratio of occupation duration divided by test duration. And the results obtained would then be extrapolated by multiplying by the same ratio of occupation duration divided by test duration. For example, in the case of "screening" [see (10)], if the anticipated occupation duration is 5 days, the off-gas duration may be limited to 24 hr, with the results multiplied by 5, provided that the quantification and reporting limits were less than 5 parts per million (ppm) (vs. 25 ppm allowed) for total hydrocarbons and 2 ppm (vs. 10 ppm allowed) for total halogens. However, if the extrapolated results (after multiplying by 5) exceeded 25 ppm and/or 10 ppm, respectively, then the quantity of gas sample for GC/MS analysis would need to be sufficient to provide quantification and reporting limits of 20 parts per billion (ppb) (vs. 0.1 ppm). And if that were not practical, then the time ratio used in the testing would need to be appropriately less.

(7) For PVHOs that use hydroxide absorbents (e.g., LiOH, soda lime) for the removal of carbon dioxide (CO_2), the concentrations of trichloroethylene, vinylidene chloride, methyl chloroform, and acetylene dichloride shall not exceed 0.1 ppm, regardless of their ACGIH TLV (or OSHA PEL) or duration of occupation; i.e., Table 1-10-1 does not apply to those four compounds.

(8) Where reactive compounds (e.g., ammonia, chlorine, hydrogen sulfide, sulfur dioxide) are anticipated, on-site testing for the presence of these compounds should be done using appropriate color-change indicator tubes (e.g., Draeger, Gastec). Evaluation of the test results shall be in accordance with (3), (5), or (6), as applicable.

(9) Where potential sources of mercury vapor are anticipated, on-site testing for its presence should be done using either color-change indicator tubes with a sufficiently low detection limit or a gold-film-type analyzer. Evaluation of test results shall be in accordance with (3), (5), or (6), as applicable.

(10) If the total halogen concentration can be shown to be less than 10 ppm, and the total hydrocarbons (expressed as methane) can be shown to be less than 25 ppm, then the GC/MS analysis and evaluation need not be done. However, if either of those limits is exceeded, the GC/MS analysis and evaluation are required.

1-11 RISK ANALYSIS

The PVHO designer shall implement and document an established standard or procedure (such as a failure-modes, effects, and criticality analysis or a safety-hazards analysis) for evaluating and mitigating potential risks associated with the PVHO and associated systems. Potential hazards shall include both hardware failure and operator error. The risks identified shall be evaluated and mitigated to a level acceptable by the user or appropriate authority. Mitigation and protective measures may include design features that minimize the probability of occurrence, inspection and tests during and following fabrication, implementation of safety and/or warning devices, protective systems, and caution or warning procedures and labels. The risk analysis results shall be retained by the designer in accordance with para. 1-7.9.

1-12 LITHIUM BATTERIES (19)

1-12.1 Scope

The requirements of this subsection apply to rechargeable and nonrechargeable lithium batteries that are used as the main or emergency source of power for the PVHO. These include, but are not limited to, lithium ion, lithium alloy, lithium metal, and lithium polymer type batteries, or other lithium battery chemistries that have the potential for self-sustaining energy release.

1-12.2 Exclusions

Lithium batteries used for portable equipment, e.g., laptops, cell phones, cameras, or other portable equipment, are not included under the scope of these requirements.

1-12.3 Certification

Lithium batteries shall be certified by a third-party independent agency, e.g., Underwriters Laboratories (UL) or Canadian Standards Association (CSA), as

ASMENORMDOC.COM : Click to view the full PDF of ASME PVHO-1 2019

complying with the requirements of one of the following standards:

(a) Section 38.3, UN Manual of Tests and Criteria

(b) UL 1642, UL Standard for Safety of Lithium Batteries

(c) other equivalent recognized national or international standards for lithium batteries

1-12.4 Installation

(a) Unless otherwise permitted by the jurisdictional authority, lithium batteries shall be installed outside the occupied pressure boundary of the PVHO.

(b) All installations shall include appropriate means to prevent inadvertent shorting between the terminals of lithium batteries (e.g., nonshorting caps).

(c) Prior to installation, a risk analysis shall be carried out for evaluating and mitigating potential risks associated with the lithium battery installation, as well as the normal and emergency operating procedures.

1-12.5 Battery Housings

Lithium batteries may be installed in either a 1-atm housing or a pressure-compensated housing.

(a) General Requirements. All battery installations housing lithium batteries shall meet the following general requirements:

(1) The housings shall be installed in locations that are as far away as practicable from sources of heat, compressed gas cylinders, and acrylic windows on PVHOs.

(2) The housings shall be mechanically protected from direct impact loads. For PVHOs that are transported while in service (e.g., diving bells or submersibles), the battery housing shall also be protected from acceleration shock loads.

(3) The housings shall be provided with means of pressure relief (such as blowout plugs or vents) in order to relieve any potential pressure buildup within the housing due to malfunctioning batteries. The discharge of the means of pressure relief shall be vented as far away as practicable from sources of heat, compressed gas cylinders, and acrylic windows on PVHOs.

(4) All electrical circuits shall be insulated and isolated from the structural elements of the housings.

(5) The housings shall be labeled appropriately and shall be provided with appropriate signs warning personnel against inadvertent abuse.

(b) 1-atm Housings. When lithium batteries are installed in 1-atm housings, the following additional requirements shall be met:

(1) The housings shall be designed to permit purging and charging of the internal atmosphere with inert gas, so as to minimize the oxygen concentration below the flammable limit.

(2) All of the electrical equipment within the housings shall be of the explosion-proof type.

(3) Water intrusion sensors, fire detectors, and pressure and temperature sensors, as appropriate, shall be provided within the housings. These devices shall activate audiovisual alarms in order to alert the PVHO operator of an adverse event (e.g., a fire or water leakage) within the housing.

(4) When the battery housings are contiguous with the pressure boundary of the PVHO, these housings shall meet the "A60" structural fire protection rating as defined by the IMO International Code for Application of Fire Test Procedures (FTP Code), or equivalent recognized standards.

1-12.6 Battery Management System (BMS) for Rechargeable Batteries

Rechargeable lithium battery installations shall be provided with an electronic BMS.

(a) The BMS shall provide means for

(1) monitoring the state of charge and state of health of the batteries

(2) charge control to prevent overcharging/undercharging and voltage reversal

(3) discharge control to prevent overdischarging

(4) intermodule and intramodule balancing of the cells

(5) overcurrent (short circuit) protection to prevent overcurrent discharge

(b) The BMS shall provide real-time performance monitoring of the following parameters:

(1) voltages (cell level and module level)

(2) currents (cell level and module level)

(3) state of charge and state of health (module level)

(4) temperature (module level)

(c) Appropriate sensors and audiovisual alarms shall be provided to alert the PVHO operator when the parameters in (b) are outside their allowable limits.

1-12.7 Protection for Nonrechargeable Batteries

Nonrechargeable lithium battery installations shall be provided with the following:

(a) over-temperature protection

(b) overcurrent (short circuit) protection

(c) voltage reversal protection

1-12.8 Testing

(a) Lithium batteries exposed to ambient pressures exceeding 1 atm shall be hydrostatically pressure tested prior to being placed in service. The pressure testing shall be carried out to the maximum rated depth of the PVHO. Satisfactory operation of the batteries shall be demonstrated during this pressure testing.

(b) For rechargeable batteries, functional testing of the BMS (see para. 1-12.6) shall be carried out.

ASMENORMDOC.COM : Click to view the full PDF of ASME PVHO-1 2019

(c) For nonrechargeable batteries, functional testing of the battery protection devices (see para. 1-12.7) shall be carried out.

1-12.9 Charging

(a) For rechargeable lithium batteries, the charging procedures shall be documented in the operations and maintenance manuals of the PVHO.

(b) As a minimum, the charging procedures shall follow the battery manufacturer's recommendations and specifications.

(c) Charging of lithium batteries shall be carried out while the PVHO is not in service, using the manufacturer-specified battery chargers.

1-12.10 Replacement

(a) Lithium batteries (including individual cells) shall be replaced, taking the following into consideration:

(1) manufacturer's recommendations and specifications

(2) visual inspection

(3) deterioration of performance

(b) The replacement shall be carried out when the PVHO is not in service.

1-12.11 Manuals and Records

(a) The normal and emergency operating and maintenance procedures for the use of lithium batteries shall be documented in the operations and maintenance manuals of the PVHO.

(b) As a minimum, these procedures shall follow the battery manufacturer's recommendations and specifications.

(c) The emergency procedures shall address events such as fires, thermal runaways, short circuits, leaks, hazardous gas buildup, low-temperature charging, electrical shocks, and stored energy hazards, as applicable.

(d) Any special measures taken for mitigating or eliminating potential risks [see para. 1-12.4(c)] shall be documented in the operations and/or maintenance manuals.

(e) A log shall be maintained to record vital information such as the installation dates and maintenance history of the batteries.

(19) 1-13 AUTOMATIC CONTROL AND SOFTWARE SAFETY

Software risk is a function of the potential severity of mishap in conjunction with the degree of autonomy exerted by the software. The risk mitigation consists of software (code) analysis, testing, and validation, with the level of rigor applied being commensurate with the potential level of risk. The following shall apply to PVHOs that employ software to monitor and/or control safety-critical systems or functions.

The PVHO designer shall implement and document a software safety analysis (including analysis, testing, and validation) that is in accordance with an established standard or procedure. Examples include (but are not limited to) the (DOD) Joint Software Systems Safety Engineering Handbook and (FDA) General Principles of Software Validation: Final Guidance for Industry and Staff.

This safety analysis shall be performed by a qualified person other than the software developer, and the results of the software safety analysis, testing, and/or validation shall be retained by the designer in accordance with para. 1-7.9.

Additionally, there shall be an independent method of monitoring and manually controlling all life-critical systems. If applicable, the risk analysis should consider risks potentially associated with connection to the Internet and/or third-party data centers.

1-14 OPERATIONAL PRESSURE CYCLE (19)

Before a PVHO may be put into service, a registered Professional Engineer, or similar, knowledgeable about the design and intended usage of the PVHO system shall review the User Requirements and all other available design and usage information to assess the need to require tracking of pressure cycles during operation of the PVHO chamber/components/system (e.g., for fatigue analysis, fracture mechanics analysis, and fitness-for-service assessments). If it is determined that tracking of operational pressure cycles is required, a definition(s) for "operational pressure cycle(s)" shall be provided by a registered Professional Engineer, or similar, knowledgeable about the design and intended usage of the PVHO system. This definition shall include all relevant parameters (e.g., pressure, temperature, and time) that impact the minimum pressure differential that shall be recorded during usage to track available life for the PVHO chamber/component/system. It should also include any threshold conditions beneath which an increase in pressure should not be counted as a pressure cycle. Various components may require their own unique definition of an operational pressure cycle.

ASMENORMDOC.COM : Click to view the full PDF of ASME PVHO-1 2019

PVHO-1 Form GR-1 Manufacturer's Data Report for Pressure Vessels for Human Occupancy
As Required by ASME PVHO-1

1. Design criteria _____
2. Manufactured and certified by _____
3. Manufactured for _____
4. Location of installation _____
5. Type _____
   (drawing no.) (manufacturer's serial no.) (year built)
6. The chemical and physical properties of all parts meet the requirements of material specifications of ASME PVHO-1–_____ (year) and Addenda to _____ (date) and Case nos. _____. In addition, the design, construction, and workmanship conform to ASME Section VIII, Division _____ (1 or 2), _____ (year) and Addenda to _____ (date) and Code Case nos. _____ .
7. Constructed for maximum allowable working pressure of _____ psi (internal) and/or _____ psi (external), at a maximum temperature of _____ °F and /or minimum temperature of _____ °F, and hydrostatic test pressure of _____ psi (internal) and/or _____ psi (external).
8. Service: Fatigue analysis required _____ (yes or no) _____ (describe service)
9. Windows: Certification Reports, properly identified and signed by the window fabricator, are attached for the following items:

No.	Location	Type	Diameter or Size	Nominal Thickness	How Attached

10. Manufacturer's Data Report/Partial Data Reports, completed in accordance with ASME BPVC, Section VIII, Division _____ (1 or 2) and properly identified and signed by Commissioned Inspectors, are attached for the following items (use PVHO-1 Form GR-1S for additional items, if necessary):

Data Report	Remarks (Name of Part, Manufacturer's Name, and Identifying Stamp)

CERTIFICATION OF DESIGN

User's Design Specification on file at _____

Manufacturer's Design Report on file at _____

User's Design Specification certified by _____ P.E. State _____ Reg. no. _____

Manufacturer's Design Report certified by _____ P.E. State _____ Reg. no. _____

CERTIFICATION OF COMPLIANCE

We certify that the statements made in this report are correct and that all details of material, construction, and workmanship of this vessel conform to the ASME Safety Standard for Pressure Vessels for Human Occupancy (PVHO-1).

ASME Certificate of Authorization _____ (U or U2), Certificate no. _____ Exp. date _____

Date _____, 20 _____ Company name _____ (PVHO manufacturer) Signed _____ (representative)

GENERAL NOTE: This form may be reproduced and used without written permission from ASME if used for purposes other than republication.

ASMENORMDOC.COM : Click to view the full PDF of ASME PVHO-1 2019

PVHO-1 Form GR-1S Manufacturer's Data Report Supplementary Sheet
As Required by ASME PVHO-1

1. Design criteria ______________________________
2. Manufactured and certified by ______________________________
3. Manufactured for ______________________________
4. Location of installation ______________________________
5. Type ______________________________
(drawing no.) (manufacturer's serial no.) (year built)

Data Report	Remarks (Name of Part, Manufacturer's Name, and Identifying Stamp)

Date ____________, 20______ Company name ______________________ Signed ______________________
(PVHO manufacturer) (representative)

GENERAL NOTE: This form may be reproduced and used without written permission from ASME if used for purposes other than republication.

ASMENORMDOC.COM : Click to view the full PDF of ASME PVHO-1 2019

Figure 1-7.13.1-1 Geometry of Cylinders

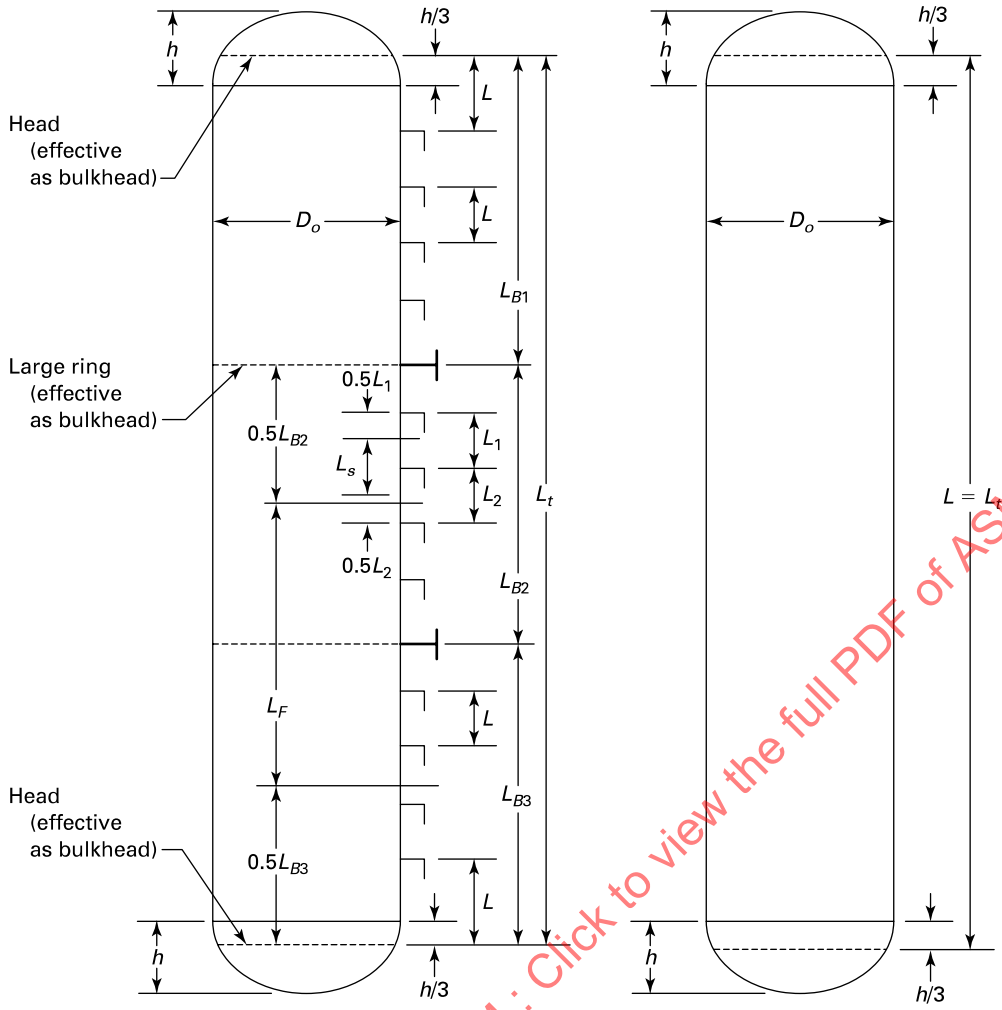

(a) Ring Stiffened **(b) Unstiffened**

ASMENORMDOC.COM : Click to view the full PDF of ASME PVHO-1 2019

Figure 1-7.13.1-2 Stiffener Geometry

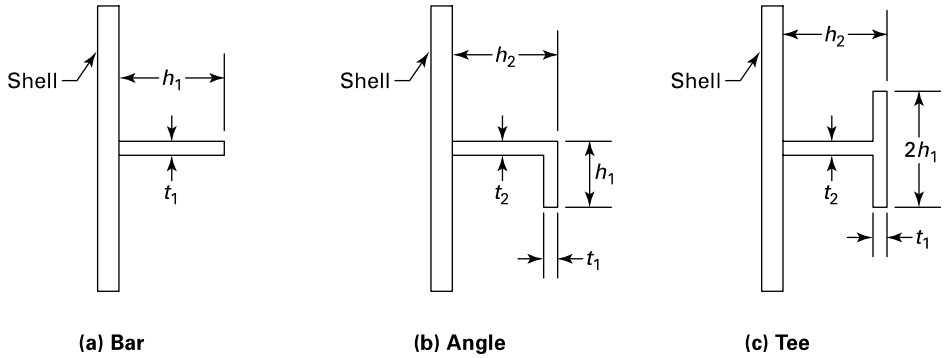

(a) Bar (b) Angle (c) Tee

Figure 1-7.13.1-3 Sections Through Rings

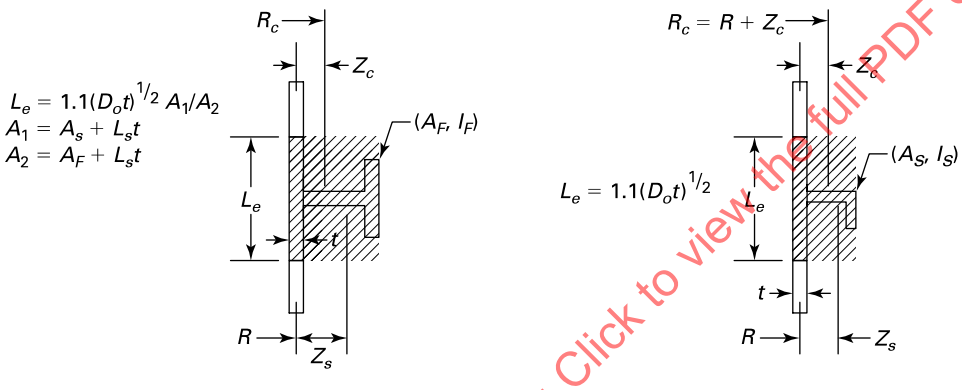

(a) Large Ring That Acts as a Bulkhead (b) Small Ring

ASMENORMDOC.COM : Click to view the full PDF of ASME PVHO-1 2019

Figure 1-7.13.5-1 Values of t/R_o and L_c/R_o

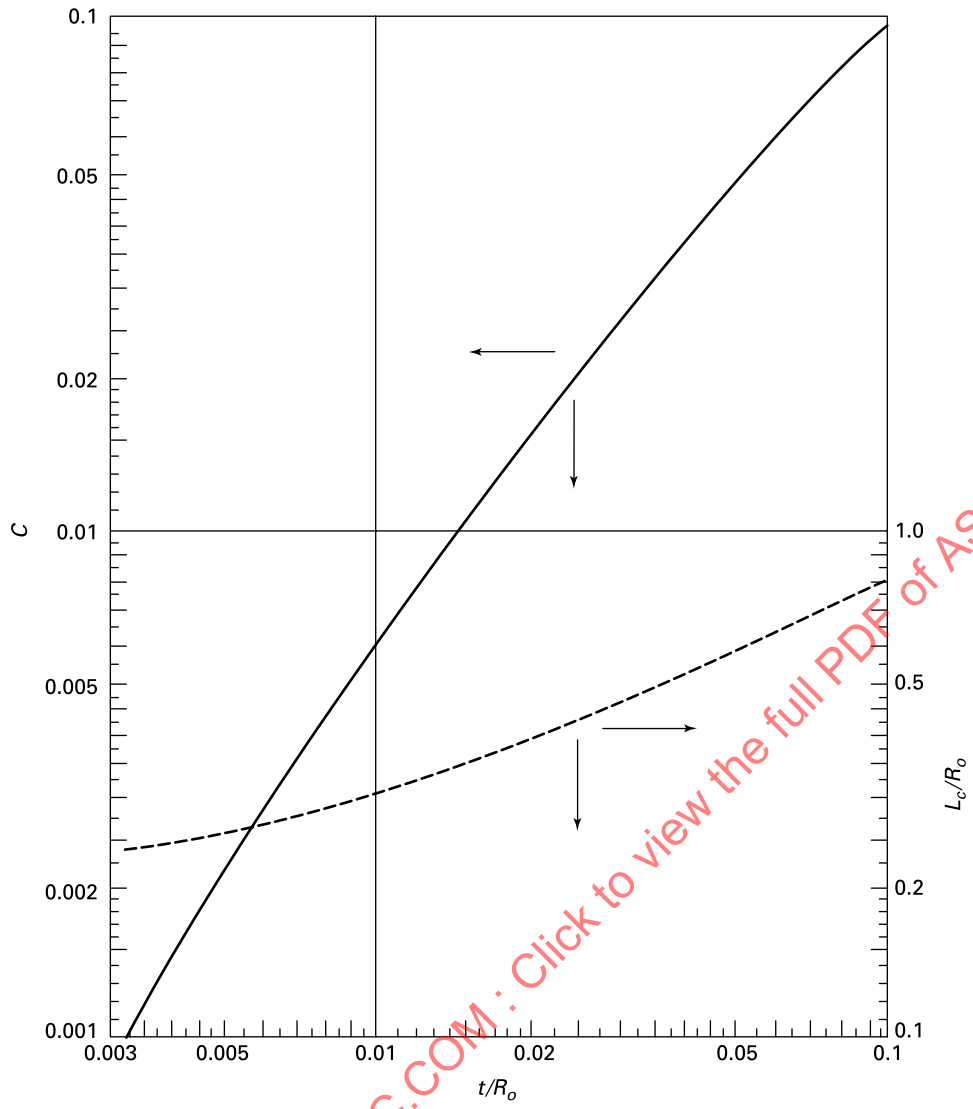

ASMENORMDOC.COM : Click to view the full PDF of ASME PVHO-1 2019

Figure 1-9-1 Form of Nameplate, U.S. Customary Units

PVHO-1

Certified by

_____
(name of manufacturer)

_____ psi internal _____ psi external
(maximum allowable working pressures)

_____°F maximum _____°F minimum
(design temperature range)

_____ _____
(manufacturer's serial no.) (year built)

_____
(design criteria)

Figure 1-9-2 Form of Nameplate, SI Units

PVHO-1

Certified by

_____
(name of manufacturer)

_____ MPa internal _____ MPa external
(maximum allowable working pressures)

_____°C maximum _____°C minimum
(design temperature range)

_____ _____
(manufacturer's serial no.) (year built)

_____
(design criteria)

Table 1-10-1 Conversion Factor, *Fp* (for PVHO Occupation Exceeding 8 hr)

Duration of Exposure	*Fp*
8 hr (or less)	1.0
12 hr	0.85
16 hr	0.75
24 hr	0.65
36 hr	0.56
48 hr	0.52
72 hr	0.46
7 days	0.37
14 days	0.32
30 days	0.28
60 days	0.26
90 days (or longer)	0.25

ASMENORMDOC.COM : Click to view the full PDF of ASME PVHO-1 2019

Section 2
Viewports

2-1 GENERAL

2-1.1 Scope

This Standard covers windows manufactured during original construction and windows used as replacements during the service life of the chamber.

The windows covered by this Standard are intended for use only in chambers with window service conditions defined by

(a) maximum allowable working pressure, equal to design pressure

(b) maximum temperature at design pressure, equal to design temperature

(c) pressure cycles, at design pressure and temperature

2-1.2 Exclusions

The windows covered by this Standard are not intended for chambers where any of the following restrictions on design parameters are exceeded:

(a) The operating temperature shall be within the 0°F to 150°F (−18°C to 66°C) range.

(b) The pressurization or depressurization rate shall be less than 145 psi/sec (1 MPa/s).

(c) The fluid (external or internal) shall be only water, seawater, air, or gases used in life-support systems.

(d) The number of pressure cycles or the total duration of the operational life of the window shall not exceed 10,000 cycles or 40,000 hr, respectively.

(e) The maximum operational pressure shall not exceed 20,000 psi (138 MPa).

(f) The exposure to nuclear radiation shall not exceed 4 Mrad.

(g) The design life of the windows shall not exceed the time limits specified in para. 2-2.7.

2-1.3 Certification

Each window shall be individually identified by the window fabricator in accordance with para. 2-6.1.

2-1.3.1 Traceability. The window fabricator shall provide an overall window certification that shall certify that the window has been fabricated in accordance with all applicable requirements of the Standard (see PVHO-1 Form VP-1 for a representative certification form). The window certification shall provide traceability of the window throughout all processes associated with its manufacture.

2-1.3.2 Additional Requirements. In addition to the overall window certification, the following certifications shall be required for a window to be considered acceptable for use in chambers:

(a) a design certification for each window and matching viewport assembly that shall include a summary of engineering calculations and/or a description of the experimental method and data used to verify compliance of the window design with the requirements of this Standard (see subsection 2-2 for design requirements).

(b) a material manufacturer's certification for each lot of acrylic that shall certify that the material meets or exceeds the minimum values of physical properties specified in Table 2-3.4-1 for each lot and verify for each casting or lot (see subsection 2-3 for material certification requirements).

(c) a material certification for each window shall certify that the material meets the minimum values specified in Table 2-3.4-2 and that these properties have been experimentally verified. Average values specified in Table 2-3.4-2 shall be reported (see subsection 2-3 for material certification requirements).

(d) a pressure testing certification for each window that shall describe the pressure, temperature, pressurization rate, duration of sustained loading, and viewport flange or test fixture used during the pressure test (see subsection 2-7 for pressure testing requirements).

2-2 DESIGN

2-2.1 General (19)

The manufacturer of the chamber shall be responsible for ensuring that the viewport design is adequate for the design conditions of the chamber. Particular attention shall be paid to design consideration of the window, including, but not limited to, the design pressure, the temperature at design pressure, and the cyclic life at design pressure.

An ASME PVHO-1 acrylic window may be assigned more than one pressure–temperature rating, provided

(a) The window is in complete compliance with Section 2 for each pressure–temperature rating.

ASMENORMDOC.COM : Click to view the full PDF of ASME PVHO-1 2019

(b) PVHO-1 Form VP-2 (Acrylic Window Design Certification) must be completed and signed for each pressure–temperature rating.

(c) The pressure test shall be performed at the pressure–temperature rating that requires the largest minimum thickness, t (calculated). If the minimum thickness is the same, the pressure test shall be performed at the highest pressure.

(d) The window shall be marked in accordance with this Standard for each pressure–temperature rating.

2-2.2 Standard Window Geometry

2-2.2.1 Configuration. Acrylic windows in chambers must have one of the standard geometries shown in Figures 2-2.2.1-1 through 2-2.2.1-4. Minimum acceptable thickness ratios shall comply with the requirements of Figures 2-2.2.1-1 through 2-2.2.1-4 for the specific window geometry. (For acceptance of nonstandard window geometries, see para. 2-2.6.)

2-2.2.2 Calculation. Calculations of the short-term critical pressure (STCP), on the basis of Figures 2-2.2.1-1 through 2-2.2.1-4, satisfy the requirements of the design certification required by this Standard under para. 2-1.3.2(a).

2-2.2.3 Tests. It shall also be acceptable to establish the STCP by conducting a series of destructive tests on full-scale or model-scale windows performed in accordance with the procedure in para. 2-2.5.2.

2-2.3 Determination of Dimensions for Standard-Geometry Windows

2-2.3.1 0 psi to 10,000 psi. The dimensions of a standard window in the 0 psi to 10,000 psi (0 MPa to 69 MPa) design pressure range shall be based solely on the window's STCP and the approved conversion factor (CF) for the given maximum ambient temperature. Minimum STCP values of standard window geometries are given in Figures 2-2.5.1-1 through 2-2.5.1-15. CF values for standard window geometries are given in Tables 2-2.3.1-1 through 2-2.3.1-5.

2-2.3.2 10,000 psi to 20,000 psi. The dimensions of windows in the 10,000 psi to 20,000 psi (69 MPa to 138 MPa) design pressure range shall be based solely on nondestructive tests in the form of long-term and cyclic pressurizations. Dimensions of approved windows for this design pressure range are given in Table 2-2.3.2-1. Only conical frustum windows with included angle of 90 deg or larger are qualified for this pressure range.

2-2.4 Determination of Conversion Factor by Table Method

2-2.4.1 Temperature. When selecting the conversion factors from Tables 2-2.3.1-1 through 2-2.3.1-5, temperature ranges shall be chosen on the basis of highest ambient sustained temperature expected during operation of the chamber at the design pressure.

(a) If the chamber interior is illuminated by externally mounted heat-generating lights shining through the windows, the 150°F (66°C) temperature range shall be mandatory in the selection of conversion factors for all windows.

(b) If the chamber is not illuminated with externally mounted lights, the temperature ranges shall be chosen on the basis of environmental temperature where the chambers reach design pressure. If the design pressure is reached when

(1) only submerged in water, use the ambient temperature of water at that depth

(2) only in air, use the average of the maximum ambient external and internal air temperatures

(3) either in air or in water, use the average maximum ambient external and internal air temperatures

2-2.4.2 Pressure. When a viewport is subjected to pressurization from both sides, the conversion factor used for the window design shall be determined on the basis of the highest design pressure, regardless of whether this pressure is external or internal to the chamber.

2-2.4.3 Values of Conversion Factors. The values of CF in Tables 2-2.3.1-1 through 2-2.3.1-5, D_i/D_f in Figures 2-2.10.1-1 and 2-2.10.1-2 and Table 2-2.3.2-1, and t/D_i in Table 2-2.3.2-1 represent minimums. The user of this Standard may exceed these values.

2-2.5 Determination of Short-Term Critical Pressure

2-2.5.1 Calculation Method. The STCP of a window accepted for service in chambers, without the use of experimental data, shall not be less than

$$\text{STCP} = \text{CF} \times P$$

where

CF = conversion factor

P = design pressure

Windows having included angles between those shown in Figures 2-2.5.1-4 through 2-2.5.1-7 are to have a t/D_i equal to that determined for a window of the next smaller included angle as shown in the appropriate figure. (For example, a spherical sector window having an included angle of 100 deg and requiring an STCP in the 5 MPa to 50 MPa range would be designed using the 90-deg curve in Figure 2-2.5.1-6.)

ASMENORMDOC.COM : Click to view the full PDF of ASME PVHO-1 2019

(a) For flat disk acrylic windows, shown in Figure 2-2.2.1-1, use conversion factors from Table 2-2.3.1-1 and STCPs from Figures 2-2.5.1-1 through 2-2.5.1-3. Short-term critical pressures may also be experimentally determined according to the procedure in para. 2-2.5.2.

(b) For conical frustum acrylic windows, shown in Figure 2-2.2.1-1, use CFs from Table 2-2.3.1-2 and STCPs from Figures 2-2.5.1-4 and 2-2.5.1-5. Short-term critical pressures may also be experimentally determined according to the procedure in para. 2-2.5.2. Windows of this type are accepted for service only where the pressure is applied to the base of the frustum.

(c) For double-beveled disk acrylic windows, shown in Figure 2-2.2.1-1, use CFs from Table 2-2.3.1-2 and STCPs from Figures 2-2.5.1-4 and 2-2.5.1-5. Short-term critical pressures may also be experimentally determined according to the procedure in para. 2-2.5.2.

(d) For spherical sector acrylic windows with conical edge, shown in Figure 2-2.2.1-2, use CFs from Table 2-2.3.1-3 and STCPs from Figures 2-2.5.1-6 and 2-2.5.1-7. Short-term critical pressures may also be experimentally determined according to the procedure in para. 2-2.5.2. Windows of this type are accepted for service only where the hydrostatic pressure is applied to the convex face.

(e) For spherical sector acrylic windows with square edge, shown in Figure 2-2.2.1-2, use CFs from Table 2-2.3.1-4 and STCPs from Figures 2-2.5.1-6 and 2-2.5.1-7. Short-term critical pressures may also be experimentally determined according to the procedure in para. 2-2.5.2. Windows of this type are accepted for service only where the hydrostatic pressure is applied to the convex surface.

(f) For hemispherical windows with equatorial flange, shown in Figure 2-2.2.1-3, use CFs from Table 2-2.3.1-4 and STCPs from Figures 2-2.5.1-6 and 2-2.5.1-7. Short-term critical pressures may also be experimentally determined according to the procedure in para. 2-2.5.2. Windows of this type are accepted for service only where the hydrostatic pressure is applied to the convex surface.

(g) For cylindrical acrylic windows, shown in Figure 2-2.2.1-3, use CFs from Table 2-2.3.1-5 and STCPs from Figures 2-2.5.1-8 through 2-2.5.1-13. Short-term critical pressures may also be experimentally determined according to the procedure in para. 2-2.5.2.

(h) For hyperhemispherical acrylic windows, shown in Figure 2-2.2.1-4, use CFs from Table 2-2.3.1-3 and STCPs from Figures 2-2.5.1-14 and 2-2.5.1-15. Short-term critical pressures may also be experimentally determined according to the procedure in para. 2-2.5.2. Windows of this type are accepted for service where the hydrostatic pressure is applied only to the convex surface, or the hydrostatic pressures are applied to either surface but the magnitude of internal design pressure does not exceed 5% of the external design pressure.

(i) For NEMO acrylic windows, shown in Figure 2-2.2.1-4, use CFs from Table 2-2.3.1-3 and STCPs from Figures 2-2.5.1-14 and 2-2.5.1-15. Short-term critical pressures may also be experimentally determined according to the procedure in para. 2-2.5.2. Windows of this type are accepted for service where the hydrostatic pressure is applied only to the convex surface, or the hydrostatic pressures are applied to either surface but the magnitude of the internal design pressure does not exceed 5% of the external design pressure.

2-2.5.2 Testing Method. The experimental determination of the STCP of an acrylic window shall be conducted by subjecting the window to hydrostatic pressure that is increased, from ambient, at a constant rate of approximately 650 psi/min (4.5 MPa/min). The pressurization shall take place at the ambient temperature range of 70°F to 77°F (21°C to 25°C) in a flange that satisfies the requirements of para. 2-2.9.

The evaluation of a window design shall be conducted on a minimum of five full-scale windows or on a minimum of five model-scale windows plus one full-scale window.

(a) For tests conducted on full-scale windows, the results generated shall be considered representative only if the lowest STCP for any window is at least 75% of the mean STCP of the other four windows. In such a case, the STCP value of the window design shall be taken as the lowest critical pressure among the five tests. In the case where the lowest STCP does not meet this criterion, the STCP value of the window design shall be equal to the single lowest STCP among the five windows multiplied by a factor of 0.75.

(b) For tests conducted on model-scale windows, the results shall be considered acceptable only if the STCP of the full-scale window is equal to or above the single lowest STCP among the five model-scale windows. In case the STCP of the single full-scale window does not meet this criterion, four more full-scale windows shall be tested, and the STCP value of the window design shall be calculated according to (a), solely on the basis of the full-scale window tests.

2-2.6 Nonstandard Window Geometries and Standard Window Geometries With Lower Conversion Factors

2-2.6.1 Case Submittal Procedure. Acrylic windows of nonstandard geometry, or of standard geometry but with nonstandard lower CFs, may be submitted for consideration as a Case for adoption by the ASME Pressure Vessels for Human Occupancy Committee and possible subsequent incorporation into the Standard as another standard geometry or standard CF for windows meeting the design parameters of subsection 2-2.

ASMENORMDOC.COM : Click to view the full PDF of ASME PVHO-1 2019

(a) Prior to submission for review, the window design shall be experimentally verified according to para. 2-2.6.3, and the window design, testing procedure, test results, and any other pertinent analytical or experimental data shall be summarized in a clear, concise, and legible technical report.

(b) One copy of the report shall accompany the submission for consideration by the Committee. Submission of the report to the Committee places its content into the public domain for review and comment by the public.

2-2.6.2 Use in Standard PVHOs. Windows with nonstandard geometries, or with standard geometries and lower CFs, may be incorporated into chambers for human occupancy provided their material properties and structural performance satisfy the mandatory short-term, long-term, and cyclic proof pressure requirements of this Standard.

2-2.6.3 Testing Criteria. Windows with nonstandard geometries, or with standard geometries and lower CFs, shall meet the following mandatory requirements:

(a) *short-term proof pressure (STPP)*: 4 times the design pressure, sustained continuously for a minimum of 30 min without catastrophic failure at design temperature environment under short-term pressurization

(b) *long-term proof pressure* (*LTPP*): design pressure sustained continuously for 80,000 hr in design temperature environment without catastrophic failure

(c) *crack-free cyclic proof pressure (CPP)*: design pressure sustained intermittently during 1,000 pressure cycles of 8 hr each in design temperature environment without cracking

2-2.6.4 STPP Test Procedure. The STPP of a window with nonstandard geometry, or with standard geometry and lower CF, shall be experimentally verified with a minimum of five windows. The STPP windows tested may consist of any combination of model-scale (of the same size) or full-scale windows.

(a) The windows shall be individually pressurized at 650 ± 100 psi/min (4.5 ± 0.7 MPa/min) in the design temperature environment to the STPP.

(b) All five windows shall survive the STPP test without catastrophic failure.

2-2.6.5 LTPP Test Procedure. The LTPP of a window with nonstandard geometry, or with standard geometry and lower CF, shall be experimentally verified as per the following paragraphs, using model-scale (of the same size) or full-scale windows:

(a) The windows shall be individually subjected to sustained pressure loading at design temperature.

(b) Each window shall be subjected to a different hydrostatic pressure, and the duration of sustained pressure preceding the catastrophic failure shall be recorded.

(c) The pressures to which five individual windows shall be subjected are 0.9, 0.8, 0.75, 0.7, and 0.65 times the average STCP established experimentally in para. 2-2.6.4.

(d) The experimental data points of (c) shall be plotted on log-log coordinates, and the relationship between critical pressures and duration of loading shall be represented empirically by a straight line. The experimental points generated in para. 2-2.6.4 with 30-min sustained loading duration shall be plotted on the same graph. The testing of any window specimen that has not failed in 10,000 hr of sustained loading may be terminated at that time and its data point omitted from the graph.

(e) The extension of the plotted line to 80,000 hr of sustained loading shall exceed the LTPP. The extrapolated failure at 80,000 hr shall be at least two times the design pressure.

(f) An alternative to the LTPP tests defined in (b) through (e) shall be sustained pressure loading of individual windows for a duration of 10,000 hr at design temperature per one of the following test programs:

(1) One window shall be tested at a sustained pressure equal to 0.9 STPP.

(2) Two windows shall be tested at a sustained pressure equal to 0.85 STPP.

(3) Three windows shall be tested at a sustained pressure equal to 0.8 STPP.

(4) Four windows shall be tested at a sustained pressure equal to 0.75 STPP.

(5) Five windows shall be tested at a sustained pressure equal to 0.7 STPP.

If all windows of any one of the five selected test programs above survive sustained pressurization for 10,000 hr without catastrophic failure, the window design is considered to have satisfied fully all requirements of the LTPP test.

2-2.6.6 CPP Test Procedure. The crack-free CPP of the window with nonstandard geometry, or with standard geometry and lower CF, shall be experimentally verified on a minimum of two model-scale windows (of the same size) or a single full-scale window.

(a) The window shall be pressure cycled 1,000 times from zero to CPP in the design temperature environment.

(b) The length of the individual pressure cycles may vary from one cycle to another, but the average length of the sustained loading and relaxation phases in all of the pressure cycles shall equal or exceed 4 hr.

(c) At the completion of 1,000 pressure cycles, the window shall be visually inspected with the unaided eye (except for correction necessary to achieve 20/20 vision) for the presence of cracks.

(d) Absence of visible cracks shall be considered proof that the window design meets the crack-free CPP requirement of this Standard.

ASMENORMDOC.COM : Click to view the full PDF of ASME PVHO-1 2019

2-2.6.7 Test Temperature Criteria. The temperature of the window, the window test assembly, and its pressurizing medium during the performance of proof tests is allowed to deviate from the specified design temperature by the following margin:

(a) for the short-term pressurization of para. 2-2.6.4, +10°F (5.5°C)

(b) for the long-term pressurization of para. 2-2.6.5, +10°F (5.5°C)

(c) for the cyclic pressurization of para. 2-2.6.6, +25°F (14°C)

2-2.6.8 Fixturing. All STPP, LTPP, and CPP testing shall be performed with each window mounted securely in a test fixture designed to withstand the maximum test pressure to which the window may be subjected.

(a) The window seat dimensions of the test fixture for full-size windows shall be the same as those used for the viewport flanges with operational full-size windows.

(b) The window seat dimensions of the test fixture for model-scale windows shall be scaled down from test fixtures for full-size windows.

2-2.6.9 Scaling. The successful qualification of a window design with nonstandard geometry, or with standard geometry and lower CF, for a chosen design pressure and temperature under the procedures of paras. 2-2.6.2 through 2-2.6.8, qualifies also other window designs with the same geometry and same or higher t/D_1 ratios for the same or lower design pressure and temperature.

2-2.7 Design Life

2-2.7.1 General. The design life of a window is a function of its geometry, conversion factor, t/D_i ratio, and service environment. Windows that are exposed to only compressive or very low tensile stresses have a longer design life than those that are exposed to high tensile stresses. The design life of windows in the first category shall be 20 yr, while for the windows in the latter category it shall be 10 yr. The design life of windows under this Standard is defined in paras. 2-2.7.2 through 2-2.7.8.

2-2.7.2 Flat Disk Windows. The design life of flat disk windows shown in Figure 2-2.2.1-1 and meeting the requirements of this Standard shall be 10 yr from the date of fabrication.

2-2.7.3 Conical Frustum Windows. The design life of conical frustum windows shown in Figure 2-2.2.1-1 and meeting the requirements of this Standard shall be 10 yr from the date of fabrication for $t/D_i < 0.5$ and 20 yr for $t/D_i \geq 0.5$.

2-2.7.4 Double-Beveled Disk Windows. The design life of double-beveled disk windows shown in Figure 2-2.2.1-1 and meeting the requirements of this Standard shall be 10 yr from the date of fabrication for $t/D_i < 0.5$ and 20 yr for $t/D_i \geq 0.5$.

2-2.7.5 Spherical Sector With Conical Edge, Hyperhemisphere With Conical Edge, and NEMO-Type Windows With Conical Edge Penetrations. The design life of spherical sector with conical edge, hyperhemisphere with conical edge, and NEMO-type windows with conical edge penetrations shown in Figures 2-2.2.1-2 and 2-2.2.1-4 and meeting the requirements of this Standard shall be 20 yr from the date of fabrication.

2-2.7.6 Spherical Sector Windows With Square Edge and Hemispherical Windows with Equatorial Flange. The design life of spherical sector windows with square edge and hemispherical windows with equatorial flange shown in Figures 2-2.2.1-2 and 2-2.2.1-3 and meeting the requirements of this Standard shall be 10 yr from the date of fabrication.

2-2.7.7 Cylindrical Windows for Internal Pressure Applications. The design life of cylindrical windows for internal pressure applications shown in Figure 2-2.2.1-3 and meeting the requirements of this Standard shall be 10 yr from the date of fabrication.

2-2.7.8 Cylindrical Windows for External Pressure Applications. The design life of cylindrical windows for external pressure applications shown in Figure 2-2.2.1-3 and meeting the requirements of this Standard shall be 20 yr from the date of fabrication.

2-2.7.9 Increase in Cyclic Design Life. For standard-geometry PVHO viewports having a design pressure of less than 2,000 psi (13.8 MPa), other than hyperhemispherical and NEMO types, the number of design pressure cycles can be increased in excess of that stated in PVHO-1 through experimental pressure testing procedures, provided the following procedures and requirements are met:

(a) For each window design, at least one window of identical shape, dimensions, and design pressure–temperature rating shall be pressure cycled from zero to design pressure to determine whether its cyclic pressure fatigue life exceeds the 10,000 cycle limit stated in PVHO-1. The pressure tests shall take place with the window installed in a test fixture whose window seat dimensions, retaining ring, and seals are identical to those of the PVHO chamber.

(b) The window shall be pressurized with gas or water. The design pressure shall be maintained for a minimum of 15 min, or 1.5 times the time it takes for creep to stabilize, whichever is greater, followed by depressurization that is to be maintained for a minimum of 10 min or 1.5 times the time it takes for creep to stabilize, whichever is greater. The pressurization and depressurization rates shall not exceed 650 psi/min (4.5 MPa/min).

(c) The temperature of the pressurizing medium during the test shall be the design temperature for which the window is rated with a tolerance of +0/−5°F

ASMENORMDOC.COM : Click to view the full PDF of ASME PVHO-1 2019

(+0/−2.6°C). Brief deviations from these temperature tolerances are allowed, provided that the deviations do not exceed +10°F (5.5°C) and last less than 10 min within each 24 hr of continuous testing.

(d) If leaks develop during pressure cycling, the window shall be removed and pertinent information (cycle count, cause, extent of damage, etc.) recorded. If no damage was noted to the window, new seals may be installed. The number of cycles credited to the window shall be those recorded at the last visual inspection prior to seal failure. After the new seal is installed, two pressure cycles (without leaks) shall be performed without credit to ensure proper seating, temperature stabilization, and creep normalization. If the new seal performs satisfactorily, the numbering of test cycles shall continue from the number recorded at the last visual inspection prior to seal failure, minus the above two cycles.

(e) At scheduled intervals during the pressure test, the windows shall be visually inspected for the presence of crazing, cracks, or permanent deformation. This examination may be performed without removal of the window from the chamber or test fixture.

(f) Crazing, cracks, or excessive permanent deformation visible with the unaided eye (except for correction necessary to achieve 20/20 vision) shall be considered failure of the windows and shall be so noted on the test report. Permanent deformation more than $0.001D_i$ in magnitude measured at the center of the window shall be considered excessive and shall be cause for rejection. The number of credited test cycles shall not exceed the number of cycles achieved during the previous successful inspection.

(g) Pressure test reports shall certify the results of the pressure test. Copies of the pressure test reports shall be furnished to the purchaser.

(h) For windows having a design pressure design life of 10,000 cycles, an extension of one cycle may be granted by the Standard for each two test cycles after completion of the first 10,000 cycles, up to failure of the test window.

(i) The maximum number of design pressure cycles shall be shown on the Window Certifications.

2-2.8 Temperature and Dimensional Criteria

2-2.8.1 Thermal Expansion. Thermal expansion of acrylic shall be taken into account during specification of the dimensional tolerance for the window diameter to be shown on the fabrication drawing, when the material temperature range required by the fabrication (para. 2-2.4) substantially differs from the operational temperature range.

2-2.8.2 Shape and Sealing Arrangement. For wide operational temperature ranges, a window shape and sealing arrangement should be selected that will perform satisfactorily at both the maximum and minimum operational temperatures. Radially compressed O-ring seals and spherical sector windows with a square edge are not suitable for such service when the change in window diameter over the operational temperature range results in a diametral clearance >0.020 in. (>0.5 mm) between the window and its seat.

2-2.8.3 Thermal Expansion Clearance Criteria. The diametral clearance between the window and its seat cavity at maximum operational temperature shall not be less than $0.001D_o$ for flat disk and spherical sector windows with square edges. The external diameter of the conical frustums and spherical shell windows with conical edge may exceed the major diameter of the conical seat in the flange by $0.002D_o$ at maximum operational temperature, provided the edge of the window is beveled in such a manner that the conical bearing surface of the window never extends beyond the bearing surface of the seat. (19)

2-2.8.4 Window and Seat Diameter. The nominal diameters of the window and of the window seat in the flange shall be identical. The actual diameters at standard temperature will differ, but still will be within the dimensional tolerances specified in para. 2-2.12.

2-2.9 Viewport Flanges

2-2.9.1 Contribution of Window to Reinforcement. Due to the difference in moduli of elasticity of the plastic window and the metallic flange, it shall be assumed in stress calculations that the window does not provide any reinforcement for the hull material around the penetrations.

2-2.9.2 Calculation Method. Any of the analytical or empirical methods for stress and displacement calculations acceptable to the applicable Division of ASME BPVC, Section VIII may be used for dimensioning the thickness, width, and location of the flange around the viewport penetration.

2-2.9.3 Reinforcement. Reinforcement for penetrations of chambers shall meet the requirements of para. 1-7.11 and the requirements of the applicable Division of ASME BPVC, Section VIII.

2-2.9.4 Requirements for Large Openings. The following minimum requirements shall be met by viewport flanges shown in Figures 2-2.10.1-1 through 2-2.10.1-4, with a finished diameter opening in excess of 24 in. (635 mm).

(a) Radial deformation of the window seat at maximum internal or external design pressure shall be less than $0.002D_i$.

(b) Angular deformation of the window seat at maximum internal or external design pressure shall be less than 0.5 deg.

ASMENORMDOC.COM : Click to view the full PDF of ASME PVHO-1 2019

Viewport flanges shown in Figures 2-2.10.1-5 through 2-2.10.1-8 do not have to meet the radial and angular deformation limits stated in (a) and (b).

2-2.10 Window Seats

2-2.10.1 Dimensional Requirements. The window seat cavity in the viewport flange must be dimensioned to provide the window bearing surface with support during hydrostatic testing and subsequent operation at maximum design pressure. The dimensions of window seat cavities for standard window geometries are shown in Figures 2-2.10.1-1 through 2-2.10.1-8.

2-2.10.2 Surface Finish. The surface finish on the window seat cavity shall be 64 μin. RMS or finer, except surfaces in contact with a bearing gasket shall not exceed 125 μin. RMS.

2-2.10.3 Corrosion Mitigation. If the window seat is not fabricated of inherently corrosion-resistant material, the surface of the window seat cavity shall be protected against corrosion expected in the design environment. A weld overlay of corrosion-resistant material prior to final machining is acceptable. Other acceptable means are painting, anodizing, or plating with electroless nickel.

2-2.11 Window Seals

2-2.11.1 General Requirements. As primary seals for standard window geometries shown in Figures 2-2.2.1-1 through 2-2.2.1-4, a soft elastomer compressed between the high-pressure face of the window and retainer ring shall be acceptable. The soft elastomeric seal may take the form of a flat gasket or a seal ring with O, U, or X cross section. The gasket or seal ring shall be of sufficient thickness to permit adequate compression without permanent set. Double-beveled disk and cylindrical windows shall use, as a primary seal, a seal ring radially compressed between the cylindrical surface of the window facing the pressure and the cylindrical window seat in the flange. Hyperhemispherical and NEMO-type windows may also use, as a primary seal, an elastomeric potting compound that adheres to both the external spherical surface of the window and the lip of the mounting flange.

2-2.11.2 Flat Disk Windows. Flat disk windows with design pressure less than 15 psi (100 kPa) may use, as the primary seal, an elastomeric potting compound that, after injection into the annular space between the edge of the window and the cylindrical surface of the seat (which have been coated beforehand with appropriate primer), shall, after room-temperature cure, adhere to both the window and the seat surfaces. The primer and elastomeric potting compound selected for this application shall be compatible with the window material, and the potting compound shall retain its elastomeric characteristics in the operational temperature range and environment.

2-2.11.3 Retainer Rings. Whenever a gasket is used as the face seal, the retainer shall precompress the gasket to ensure a minimum of 0.01 in. (0.25 mm) compression of the gasket between the retaining ring and the face of the axially displaced window at design pressure.

For conical frustum and spherical sector windows with conical edge, the magnitude of the maximum axial displacement may be calculated on the basis of Figure 2-2.10.1-1, using the specified D_i/D_f ratios as the maximum predicted limits of axial displacement during pressurization to design pressure based on the assumption that the minor diameter, D_i, of the window will vertically displace to the D_f of the window.

For flat disks, spherical sectors with square edges, and hemispheres with equatorial flanges, the magnitude of maximum axial window displacement may be calculated by multiplying the thickness of the bearing gasket by 0.30.

2-2.11.4 Gasket Compression. The compression of the soft elastomeric gasket by the retainer ring around the circumference of the window shall be uniform. The magnitude and uniformity of compression shall be checked by measuring, around the circumference of the window, the distance between the surface of the window and the external surface of the retainer ring before and after torquing down on the ring. The values of gasket compression measured at fastener locations and measured midway between fasteners shall not differ from each other by more than 25%, and the minimum value shall be equal to or exceed the magnitude of compression specified by para. 2-2.11.3 at standard temperature.

2-2.11.5 Electrogalvanic Requirements. The retainer ring and the fasteners shall be fabricated from materials that are electrogalvanically compatible with the viewport flanges. Unreinforced plastics and fiber-reinforced plastic composites are not acceptable materials for this application.

2-2.11.6 Retainer Ring Design Factor. The retainer ring and the associated fastening arrangement shall be designed with a safety factor of 4, based on the ultimate strength of materials. The design pressure forcing the window against the retainer ring shall not be less than 5 psig.

2-2.11.7 Minimum Compression. The minimum compression of seal rings shall be governed by the specifications of the seal ring manufacturer for the given seal ring size and service.

2-2.11.8 Secondary Seal. A secondary seal is required between the window and the steel cavity seat for flat disks, spherical sectors with square edge, and hemispheres with equatorial flange. The secondary seal also serves as a bearing gasket for the window. This gasket must be

ASMENORMDOC.COM : Click to view the full PDF of ASME PVHO-1 2019

bonded with contact cement to the metal flange seat. Thickness of the gasket shall not exceed $^1/_8$ in. (3.0 mm). Neoprene-impregnated nylon cloth, neoprene of 90 durometer hardness, and cork gaskets are acceptable for such application.

2-2.11.9 Seal Ring Grooves

(a) Seal ring grooves are not permitted in either the surface of any window shape or the bearing surface of the seat in the mounting, unless data showing that identical window assemblies that have successfully met the criteria of para. 2-2.6.6 are included with the window design certification package.

(b) Seal ring grooves are permitted in the window seat in the mounting, provided that the groove is located in the nonbearing surface of the seat. The edges of the O-ring groove shall be beveled with a radius of 0.01 in. < R < 0.02 in. (0.25 mm < R < 0.50 mm).

2-2.11.10 Edge Seals. Edges of bearing surfaces at the high-pressure faces of windows may be beveled for containment of O-rings provided that the width of the bevel as shown in Figures 2-2.11.10-1 and 2-2.11.10-2 shall not exceed $0.12t$ for spherical sectors, $0.62t$ for hyperhemispheres, $0.5t$ for conical frustums, $0.25t$ for flanged hemispheres and for flat disks under one-way pressurization, and $0.125t$ for spherical sectors with square edges and for cylinders. For flat disks serving as two-way windows, both edges may be beveled, provided $D_o/D_i > 1.25$ and D_o is measured only to the edge of the plane-bearing surface.

2-2.11.11 Clear Viewport Retaining Covers. Clear viewport retaining covers are permitted for O-ring-sealed flat disk and conical frustum standard-geometry PVHO windows in applications where reverse pressure on the viewport window is not possible and the design pressure is less than 135 psig, provided the following provisions are met:

(a) The thickness of the clear viewport retaining cover shall not be less than 0.25 in. (6 mm) or $0.025D_o$, whichever is greater.

(b) Where retaining screws are used to secure the clear viewport retaining cover, the clearance holes between the retaining screws and the cover shall be large enough to compensate for thermal expansion and contraction of the cover material. Flat washers shall be used between the screwhead and clear viewport retaining cover.

(c) Provisions shall be made for equalizing the pressure between the clear viewport retaining cover and the viewport window, e.g., a $^1/_{16}$-in. (1.6-mm) diameter hole located in the cover inside the O-ring seal diameter.

(d) Acrylic plastic (per ASTM D4802-02 or equivalent) and clear polycarbonate plastic (per ASTM C1349-04 or equivalent) are acceptable materials for clear viewport retaining covers.

(e) The requirements of paras. 2-2.11.3, 2-2.11.4, 2-2.11.6, and 2-2.11.7 apply to clear viewport retaining covers. See Figure 2-2.11.11-1 for acceptable configurations for clear viewport retaining covers.

2-2.11.12 Configurations. The configuration of window mountings and seal arrangements shown in Figures 2-2.5.1-1 through 2-2.5.1-15 represent designs acceptable under this Standard and are shown there only for the guidance of designers.

2-2.11.13 Replacement Windows. Replacement windows for pressure chambers fabricated to design criteria of ANSI/ASME PVHO-1–1977 or ANSI/ASME PVHO-1–1981 may incorporate O-ring grooves in nonbearing surfaces of the window provided

(a) the window meets all the requirements of the 1977 or 1981 edition

(b) the accompanying design certification notes that the window is a replacement for an existing pressure vessel built to the 1977 or 1981 edition

2-2.12 Dimensional Tolerances and Surface Finish

2-2.12.1 Thickness. Thickness of the window shall be everywhere equal to or greater than the nominal value determined by the procedures of para. 2-2.5.1.

2-2.12.2 Conical Windows

(a) The major diameter of the conical bearing surface on a window shall be machined within $+0.000/-0.002D_o$ of the nominal value.

(b) The included conical angle of the window shall be within +0.25/−0.000 deg of the nominal value.

(c) The included conical angle of the window seat in the flange must be within +0.000/−0.25 deg of the nominal value.

(d) The conical seat in the flange shall not deviate more than $0.001D_o$ in. from an ideal circle when measured with a feeler gauge inserted between the mating conical surfaces of the seat and of the window at its outer circumference. The axial force used to seat the window during this test shall not exceed $10D_o$ lb ($4.53D_o$ kg) applied uniformly around its circumference.

(e) The major diameter of the conical seat cavity in the flange must be within $+0.002D_o/-0.000$ of the nominal value.

2-2.12.3 Spherical Sector Windows. The concave or convex surface of a spherical window shall not differ from an ideal spherical sector by more than +0.5% of the specified nominal external spherical radius for standard CF values (see Tables 2-2.3.1-3 and 2-2.3.1-4 and Figures 2-2.5.1-6, 2-2.5.1-7, 2-2.5.1-14, and 2-2.5.1-15). Measurements shall be made from an external segmental template whose radius falls within the specified dimensional tolerance and whose length is equal to the window's included conical angle or 90 deg, whichever is the lesser

ASMENORMDOC.COM : Click to view the full PDF of ASME PVHO-1 2019

value. The thickness of the spherical window may decrease from its base to its apex provided that the minimum thickness meets the requirements of para. 2-2.5 for the design pressure and design temperature of the particular spherical window geometry.

2-2.12.4 Flat Disk Windows

2-2.12.4.1 Window External Diameter. The dimensional tolerance of the external diameter of the window shall be based on the type of sealing arrangement for the window.

(a) The external diameter of the flat disk window shall be within +0.000/−0.010 in. (+0.000/−0.25 mm) of the nominal value if the window is to be sealed in the seat cavity with a radially compressed O-ring.

(b) The external diameter of the flat disk window shall be within +0.000/−0.060 in. (+0.000/−1.5 mm) of the nominal value if the window is to be sealed in the seat cavity with a seal ring wedged into the annular space between the retaining ring, the window's bevel, and the cylindrical surface of the seat cavity.

(c) The external diameter of the flat disk window shall be within $+0.0/-0.125D_o$ of the nominal value if the window is to be sealed in the seat cavity with a flat elastomeric gasket axially compressed by the retaining ring.

(d) The external diameter of the flat disk window shall be within $+0.00/-0.02D_o$ of the nominal value if the window is to be sealed in the seat cavity with a room-temperature curing elastomeric compound injected into the annular space between the edge of the window and the cylindrical surface of the seat.

(e) The plane bearing surface of the flat disk window shall not deviate more than $0.001D_o$ from an ideal plane.

2-2.12.4.2 Seat Cavity Diameter. The dimensional tolerance on the external diameter of the window seat cavity shall be based on the type of sealing arrangement for the window.

(a) The diameter of the seat cavity for a flat disk window shall be within +0.01/−0.00 in. (+0.25/−0.00 mm) of the nominal value if the window is to be sealed in the seat cavity with a radially compressed O-ring.

(b) The diameter of the seat cavity for a flat disk window shall be within +0.06/−0.00 in. (+1.5/−0.00 mm) of the nominal value if the window is to be sealed in the seat cavity with a seal ring wedged into the annular space between the retaining ring, the window's bevel, and the cylindrical surface of the seat cavity.

(c) The diameter of the seat cavity for a flat disk window shall be within +0.125/−0.000 in. (+3.2/−0.00 mm) of the nominal value if the window is to be sealed in the seat cavity with a flat elastomeric gasket axially compressed by the retaining ring.

(d) The diameter of the seat cavity for a flat disk window shall be within $+0.01D_o/-0.000$ of the nominal value if the window is to be sealed in the seat cavity with a room-temperature curing elastomeric compound injected into the annular space between the edge of the window and the cylindrical surface of the seat.

(e) The plane bearing surface of the seat cavity shall not deviate more than $0.002D_o$ from an ideal plane when measured with a feeler gauge inserted between the mating plane surfaces of the flat disk window or a circular plug gauge and the bare seat cavity. The axial force used to seat the window or the plug gauge shall not exceed $10D_o$ lb ($4.53D_o$ kg) applied uniformly around its circumference.

2-2.12.5 Spherical Windows

(a) The external diameter of the spherical window with square seat shall be within $+0.000/-0.0005D_o$ of the nominal value.

(b) The diameter of the seat cavity for a spherical window with square seat shall be within $+0.0005D_o/-0.000$ of the nominal value.

(c) The plane bearing surface of the seat cavity shall not deviate more than $0.001D_o$ from an ideal plane when measured with a feeler gauge inserted between the mating plane bearing surfaces of the spherical window with a square edge and the seat cavity. The axial force used to seat the window shall not exceed $10D_o$ lb ($4.53D_o$ kg) applied uniformly around its circumference.

2-2.12.6 Cylindrical Windows. The maximum out-of-roundness of a cylindrical window shall not differ from an ideal cylinder by more than +0.5% of the specified nominal external radius for standard CF values (see Table 2-2.3.1-5).

2-2.12.7 Surface Finish. The bearing surface of the window shall have an as-cast or machined finish no rougher than 32 μin. RMS.

2-2.12.8 Viewing Surface. Window viewing surfaces shall be polished to meet the requirements of para. 2-3.7(e).

2-2.12.9 Other Surfaces. All other surfaces shall be machined or sanded to attain at least a 63-μin. RMS finish. Saw cut finish is not acceptable on any window surface.

2-2.13 Documentation

2-2.13.1 Drawing Requirements. The manufacturer shall be responsible for the translation of the design of the window and its related viewport flange, retainer rings, and seals into drawings that can be used for fabrication.

2-2.13.2 Window Identification. Drawings that provide construction details shall bear notice that the windows have been designed and shall be built to ASME PVHO-1. Drawings shall identify the appropriate edition.

ASMENORMDOC.COM : Click to view the full PDF of ASME PVHO-1 2019

2-2.13.3 Design Certification. The designer shall fill out a design certification as described in para. 2-1.3.2(a). All pertinent design data shall be shown, and any additional information used in the design shall be referenced on the certification. The designer may develop an appropriate certification form using PVHO-1 Form VP-2 as a representative sample.

2-2.13.4 Drawing Transmittal. The manufacturer shall transmit the design certification plus construction drawings to the window fabricator at the time of fabrication.

2-2.14 Windows With Inserts for Penetrators

2-2.14.1 General. Inserts that serve as bulkheads for electrical, mechanical, optical, or hydraulic penetrators can be incorporated into acrylic windows, provided that the penetrations and inserts meet the requirements of this subsection. These requirements are grouped into categories of window shapes, pressure service, penetration location, penetration configuration, insert material, insert configuration, seating arrangements, insert retainment, pressure testing, and certification.

2-2.14.2 Shape Limitations. The window shapes in which penetrations can be incorporated without reducing their working pressure are spherical shell sectors with conical seats (see Figure 2-2.2.1-2), hemispheres with or without flanges (see Figure 2-2.2.1-3), hyperhemispheres, and NEMO spheres (see Figure 2-2.2.1-4).

2-2.14.3 Penetration Limitations. Windows with penetrations can be incorporated into pressure vessels for external or internal pressure service, provided that the design pressure acts only on the convex surface of the window.

2-2.14.4 Penetration Locations (Spherical Shell Sector). On spherical shell sectors with conical seats, hemispheres without flanges, hyperhemispheres, and NEMO spheres, the penetrations may be located anywhere, provided

(a) the spacing between the window seat and the edge of the penetration exceeds two diameters of the penetration

(b) the spacing between edges of adjacent penetrations measured on the concave surface exceeds the radius of the larger penetration

2-2.14.5 Penetration Location (Hemispheres). On hemispheres with flanges, the penetration may be located only within the area between the apex and latitude of 60 deg, provided the spacing between edges of adjacent penetrations exceeds the radius of the larger penetration measured on the concave surface.

2-2.14.6 Penetration Configuration. The penetrations shall have circular configurations.

2-2.14.7 Area of Single Penetration. The area of a single penetration shall not exceed 15% of the window's surface prior to machining of the penetration in the window.

2-2.14.8 Total Area. The total area of all penetrations in a single window shall not exceed 30% of the window's concave surface.

2-2.14.9 Seats. All penetrations shall have conical seats forming surfaces of imaginary solid cones.

2-2.14.10 Included Angle. The included solid angle of any conical seat shall be chosen to make the imaginary apex of the solid cone coincide with the imaginary center of concave curvature.

2-2.14.11 Maximum Diameter. The maximum size of the penetration diameter shall be defined by a solid cone angle of 60 deg, provided the area of the penetration, defined as $\pi(M_o)^2/4$ (see Figure 2-2.14.11-1), does not exceed the limits specified in paras. 2-2.14.7 and 2-2.14.8.

2-2.14.12 Tolerances. The angular and dimensional tolerances for penetrations, as well as for the surface finish on the seat, are shown in Figure 2-2.2.1-1.

2-2.14.13 Insert Material. The inserts for the penetrations shall be made from metal or from plastic, provided the material properties satisfy the following criteria:

(a) Any metal approved by this Standard may be used for the fabrication of inserts, provided that the selected alloy is corrosion resistant to stagnant seawater and its tensile and compressive yield strengths exceed 25,000 psi (172 MPa). Steel alloys without corrosion resistance may be substituted for corrosion-resistant alloys if the insert is cadmium or nickel plated after completion of all machining operations.

(b) Acrylic meeting the criteria of Table 2-3.4-2 and polycarbonate plastic meeting the criteria of Table 2-2.14.13-1 are acceptable materials for the fabrication of inserts, provided that in service they shall only

(1) come in contact with fluids and gases defined by para. 2-1.2(c)

(2) be subjected to temperatures that are lower than the design temperature of the window

Cast unfilled monolithic Type 6 nylon meeting the criteria of Table 2-2.14.13-2 may be used for the fabrication of bearing gasket inserts for NEMO windows (see Figure 2-2.10.1-8).

2-2.14.14 Temperature Considerations. Since the temperature of a shorted-out electrical connector may exceed the design temperature of the plastic insert, the designer shall forestall the potentially unacceptable temperature rise by limiting the magnitude and/or duration of power input to the connector during an electrical short.

ASMENORMDOC.COM : Click to view the full PDF of ASME PVHO-1 2019

2-2.14.15 Insert Tolerances. The angular and dimensional tolerances for inserts are shown in Figure 2-2.14.15-1. All surfaces on the insert shall have a finish of 32 μin. RMS or finer.

2-2.14.16 Insert Shape. The inserts shall have the shape of a spherical sector or of a truncated cone, where

(a) the solid included angle of the bearing surface on the insert matches the conical seat in the penetration

(b) the bearing surface of the insert extends past the edges of the seat in the penetration (Figure 2-2.14.16-1)

2-2.14.17 Metal Inserts. Any number or size of holes may be drilled and tapped in the metal insert to receive hydraulic, electrical, optical, or mechanical bulkhead penetrators, provided that the openings and their reinforcements conform to the appropriate Division of ASME BPVC, Section VIII.

2-2.14.18 Polycarbonate Inserts. Smooth holes may be drilled in the polycarbonate insert to receive hydraulic, electrical, optical, or mechanical bulkhead penetrators, provided

(a) the spacing between edges of adjacent holes in the insert exceeds the diameter of the larger adjacent hole.

(b) the spacing between the edge of the insert and the edge of any hole exceeds the diameter of that hole.

(c) the surface finish inside the holes is 32 μin. RMS or finer. The holes shall be sized for the penetrators to support the edges of the holes when the window assembly is subjected to design pressure.

2-2.14.19 Acrylic Inserts. Smooth holes may be drilled in the acrylic insert to receive hydraulic, electrical, optical, or mechanical bulkhead penetrators, provided

(a) the spacing between edges of adjacent holes in the insert exceeds two diameters of the larger adjacent hole.

(b) the spacing between the edge of the insert and the edge of the hole exceeds two diameters of the hole.

(c) the surface finish inside the holes is 32 μin. RMS or finer. The holes shall be sized for the penetrators to support the edges of the holes when the window assembly is subjected to design pressure.

2-2.14.20 Insert Thickness. The thickness of the insert shall depend on the material from which the insert is fabricated.

(a) For plastics, the thickness of the inserts in the shape or spherical sectors or conical frustums shall be calculated on the basis of maximum allowable tensile and compressive stresses specified for the chosen material by the appropriate Division of ASME BPVC, Section VIII.

(b) An alternate approach requires hydrostatic testing of the new insert design in an acrylic seat to 3 times the desired design pressure without producing permanent deformation ≥0.2%. The pressurization shall be at a 650-psi/min (4.5-MPa/min) rate.

2-2.14.21 Duplicate Inserts. Duplicate inserts of the same material, design, and construction need not be proof tested but shall be pressure tested according to subsection 2-7.

2-2.14.22 Insert Seals. All inserts require two separate seals to prevent entry of water through the joint between the bearing surface of the insert and the seat in the window — a primary seal and a secondary seal.

(a) Sealing between the insert and the window shall be provided by two seals. A primary seal shall serve as the contact between the two conical mating surfaces on the insert and window. A secondary seal shall serve as the contact between the two conical mating surfaces on the insert and window, and as elastomeric material held captive between the convex window surface and a flange on the insert.

(b) Experimentally proven secondary seal designs shown in Figure 2-2.14.22-1 represent designs acceptable under this Standard and are provided for guidance only.

2-2.14.23 Insert Seal Grooves. Grooves for containment of seals shall not be machined in either the conical seat on the window or the conical bearing surface on the insert in contact with the window. It is acceptable to incorporate an O-ring groove in the conical bearing surface of a metallic insert if a gasket of approved material is interposed between the metallic insert and the seat on the window (see Figure 2-2.10.1-8).

2-2.14.24 Insert Retention. The inserts shall be mechanically restrained against ejection from their seats in the window by accidental application of pressure to the concave surface of the window or bending moments to the feedthroughs.

(a) The mechanical restraint shall be capable of retaining the insert against a pressure of 15 psi (0.1 MPa) applied against the concave surface of the window and bending moments generated by wave slap and hydrodynamic drag against cables, hydraulic lines, or mechanical linkages attached to the insert. The tensile stress resulting from bending moment shall not exceed 2,500 psi (12.2 MPa).

(b) Experimentally proven restraint designs shown in Figure 2-2.14.24-1 represent designs acceptable under this Standard and are provided for guidance only.

2-2.14.25 Insert Stress Relief. All inserts shall be stress relieved after all the fabrication processes have been completed. Acrylic shall be stress relieved according to the schedules of Table 2-4.5-1. Polycarbonate shall be stress relieved for a period of 8 hr at 250°F (120°C).

2-2.14.26 Insert Inspection. Each finished insert shall be subjected by the fabricator to a quality control inspection. The quality control inspection shall consist of dimensional and visual checks whose objective is to determine whether the finished insert meets the dimensional

ASMENORMDOC.COM : Click to view the full PDF of ASME PVHO-1 2019

tolerances, material quality, and surface finish requirements specified in para. 2-2.13.

2-2.14.27 Insert Pressure Test. Each insert shall be pressure tested at least once prior to being accepted for service.

(a) The pressure test shall take place with the insert installed in the window, or an acrylic test fixture whose thickness, surface curvatures, and penetration dimensions are identical to those in the window.

(b) The pressure test shall be conducted according to procedures described in subsection 2-7.

(c) The test pressure and temperature shall be determined by the design pressure and temperature of the window in which the insert shall be installed for service.

2-2.14.28 Insert Inspection. Each insert shall be individually certified. The certification shall include the following:

(a) design certification
(b) material manufacturer's certification
(c) material properties certification
(d) fabrication data report
(e) pressure testing certification

2-2.14.29 Insert Certification Procedure. Each of the certifications shall follow the procedure described in para. 2-1.3.2, except that the material certifications for polycarbonate and metallic inserts shall differ from the one specified for acrylic.

(a) For polycarbonate, the supplier shall provide a report listing the results of tests performed according to Table 2-2.14.13-1 on coupons cut from the stock used in the fabrication of inserts.

(b) For metal, the supplier shall provide a certified mill test report. The report shall include the results of all the tests as required by the material specifications, including chemical analysis and mechanical tests. In addition, the results of any applicable supplementary tests shall be recorded.

2-3 MATERIAL

2-3.1 Material Restrictions

Windows shall be fabricated only from cast polymethyl methacrylate plastic, hereafter referred to as acrylic.

2-3.2 Laminated Sheets

Laminating several sheets of acrylic to arrive at the desired window thickness is not permitted.

2-3.3 Acrylic Bonding

Joining of acrylic castings by bonding is permitted, provided that the following requirements are met:

(a) The joint shall be subjected only to membrane compressive stresses.

(b) The properties of the bond joint shall meet or exceed those specified in para. 2-3.10.

(c) The joint shall be pressure tight during hydrostatic testing of the window.

2-3.4 Acrylic Requirements

The acrylic used for fabrication of windows shall satisfy the following two general requirements:

(a) The casting process used in production of acrylic shall be capable of producing material with the minimum physical properties shown in Table 2-3.4-1. The manufacturer of material shall provide certification to the window fabricator that the typical physical properties of the material satisfy the criteria of Table 2-3.4-1. The material manufacturer's certification shall convey the information in a form equivalent to PVHO-1 Form VP-3. The certification shall identify the material by lot number and shall be marked in such a way that each casting shall be positively identified with the lot number. If the manufacturer is not willing to certify that the typical physical properties of the castings meet the requirements in Table 2-3.4-1, experimental verification of all properties shown in Table 2-3.4-1 becomes mandatory.

(b) The acrylic castings from which the windows are produced shall meet the minimum physical properties specified in Table 2-3.4-2 after the castings have been annealed per para. 2-4.5. The acceptance tests of castings shall be conducted for the window fabricator by the manufacturer of acrylic or by an independent materials testing laboratory. The results of the material acceptance tests (specified in Table 2-3.4-2) for sheet or custom castings shall be certified on a form equivalent to PVHO-1 Form VP-4. This certification shall be provided to the window fabricator and shall become a part of the certification information forwarded to the chamber manufacturer or user.

2-3.5 Acrylic Form

Acrylic castings shall be supplied in sheet form or as custom castings. All acrylic sheet castings shall have a nominal thickness of ½ in. (12.5 mm) or greater.

For purposes of this Standard, acrylic in the form of custom castings is classified as either Type 1 or Type 2 castings.

(a) *Type 1 custom castings* are defined as being of such thickness and configuration, and produced by such a process, as to meet the requirements of Table 2-3.4-1 without experimental verification. To classify a casting as a Type 1 custom casting, the manufacturer of acrylic shall certify that he/she has produced castings of similar shape and thickness and of the same material in the past and that such castings have met the requirements of Table 2-3.4-1.

ASMENORMDOC.COM : Click to view the full PDF of ASME PVHO-1 2019

(b) Type 2 custom castings are defined as being produced in such a thickness or configuration, or by such a process, that the manufacturer of acrylic must experimentally verify that the acrylic castings possess the minimum physical properties specified in Table 2-3.4-1. All custom castings failing to meet the requirements of Type 1 shall be classified as Type 2 custom castings.

2-3.6 Material Property Tests

Acceptance tests performed according to para. 2-3.4(b) on a single casting can be used not only to certify the particular casting, but also, under special circumstances, to certify an entire lot.

(a) Acceptance tests performed according to para. 2-3.4(b) on one sheet casting chosen at random from a lot of acrylic cast sheets shall serve to certify all sheets of that lot, provided that the manufacturer of acrylic shall positively and permanently identify each sheet so certified with a lot number and the designation ASME PVHO-1.

(b) The manufacturer of acrylic sheet castings may certify that a product of a given thickness meets the typical physical properties specified in Table 2-3.4-1 without identification of lot number. Each casting so certified shall have acceptance tests performed on it according to para. 2-3.4(b) and at that time have assigned to it an inventory control identification that shall be affixed to the casting by the window fabricator and used in lieu of a lot identification in all ASME PVHO-1 documentation.

(c) Acceptance tests performed according to para. 2-3.4(b) on specimens cut from one Type 1 custom casting shall serve to certify all castings of that lot. The manufacturer shall positively and permanently identify each certified casting with lot number and safety standard designation ASME PVHO-1.

(d) Single Type 1 custom castings shall have acceptance tests performed according to paras. 2-3.4(a) and 2-3.4(b) on specimens cut from each casting.

(e) Type 2 custom castings shall have tests performed according to paras. 2-3.4(a) and 2-3.4(b) on specimens cut from each casting to experimentally verify that the acrylic possesses the physical properties specified in both Tables 2-3.4-1 and 2-3.4-2. Tests for experimental verification of properties in Table 2-3.4-1 shall serve also to certify the properties in Table 2-3.4-2.

2-3.7 Properties Test Specifications

Testing of acrylic castings for the physical and optical properties specified in Tables 2-3.4-1 and 2-3.4-2 shall follow ASTM methods where applicable. Where possible, samples for testing shall be taken from an integral part of the casting. A test coupon casting may be used to supply material for testing, provided that the test coupon and window castings meet the lot requirements. Samples for testing shall be cut so that no surface of the test sample is closer to an unfinished cast surface than the normal trim line. Where possible, test samples shall be cut from the central portion of the original casting (e.g., a large casting cut into several windows). The test methods for physical properties specified in Table 2-3.4-2 shall be as follows:

(a) Tests for tensile properties shall be performed per ASTM D638, using a testing speed of 0.20 in./min (5.0 mm/min) ±25%.

(b) Tests for compressive deformation shall be per ASTM D695.

(c) Tests for Compressive Deformation

(1) General. Tests for compressive deformation shall be performed using specimens loaded to 4,000 psi (27.6 MPa) and tested at 122°F (50°C). The sample size is a ½-in. (12.5-mm) cube. To test nominal ½-in. (12.5-mm) thick material, machine the specimen in such a manner that the as-cast surfaces serve as the load-bearing surfaces. Do not stack samples to reach ½ in. (12.5 mm) height; instead test a sample, ½ in. × ½ in. (12.5 mm × 12.5 mm) nominal thickness. For materials that are cast with irregular surfaces or thicker than ½ in. (12.5 mm), machine the samples from the casting such that the compression face is as close as possible to the bottom side of the casting.

(2) Procedure. Place the test specimen between the anvils of the testing machine. Apply the load to the specimen without shock and take the initial reading 10 sec after the full load is on the specimen. At the end of 24 hr, take a second reading and record the total change in height. Determine the original height of the specimen by measuring the specimen after it is removed from the testing machine and adding this to the total change in height as read on the dial of the testing machine.

(3) Calculation. Calculate the deformation as the percentage change in height of the test specimen after 24 hr, as follows:

$$\text{Deformation,\%} = (A/B) \times 100$$

where

A = change in height in 24 hr (= height after load application − height after 24 hr)

B = original height (= height after removal + total change)

(4) Report. The report shall include the following:

(-a) original height of the test specimen

(-b) thickness of the cube

(-c) conditioning procedure

(-d) temperature of test and the force applied

(-e) change in height of the test specimen in 24 hr

ASMENORMDOC.COM : Click to view the full PDF of ASME PVHO-1 2019

(-f) deformation (flow or combined flow and shrinkage) expressed as the percentage change in height of the test specimen calculated on the basis of its original height

NOTE: Measurements shall be made in consistent units measured to the nearest 0.001 in. (0.0254 mm).

(d) Test for the presence of an ultraviolet absorber (ultraviolet transmittance) shall be made using a scanning ultraviolet monochromator having a bandwidth of 10 nm or less and a minimum sensitivity of 0.02%, a photometer having reproducibility of +1% of full scale, and the practices of ASTM E308 to measure the spectral transmittance in the 290 nm to 330 nm wavelength band. Report the value of one specimen of ½ in. ± 0.01 in. (12.7 mm ± 0.25 mm) thickness with light passing through polished faces. Report the maximum percent transmission detected between 290 nm and 330 nm and the peak location where the maximum percent transmission was located. Measurements can be made on the casting or on the monomer mix from which the plastic is to be cast. Solid samples shall have two polished faces through which the light passes.

(e) The clarity of a finished window shall be visually rated. Clear print of size 7 lines per column inch (25 mm) and 16 characters to the linear inch (25 mm) shall be clearly visible when viewed from a distance of 20 in. (500 mm) through the thickness of the finished window.

(f) Since an ASTM standard method is not available for measurement of residual acrylic monomer, the procedure specified in para. 2-3.8 is recommended.

(19) 2-3.8 Testing for Residual Monomer

A sample of suitable size shall be obtained and analyzed for unpolymerized methyl methacrylate and unpolymerized ethyl monomers using gas or liquid chromatographic techniques. Options for determination of residual monomers include gas chromatography (GC) and high-pressure liquid chromatography (HPLC). Samples for testing shall be cut so that the center point of the analyzed piece is no closer to the original edge or surface of the casting than the thickness divided by 2. The following (after Cober and Samsel, SPE Transactions, "Gas Chromatograph, a New Tool for Analysis of Plastics," April 1962, pp. 145–151) is a suitable procedure:

(a) The instrument may be a Beckman GC-2A gas chromatograph, equivalent, or better, with a hydrogen flame detector, or equivalent, and a 6-ft (1.8-m) column of ¼ in. (6.0 mm) stainless tubing operated at 212°F (100°C). Pack the column with 25% diethylene glycol adipate polyester (LAC-2R-446, Cambridge Industries Co.) and 2% phosphoric acid on an 80–100 mesh Celite filter aid. The acrylic to be analyzed shall weigh approximately 2.0 g and shall be dissolved in exactly 50 mL of methylene chloride. Inject a 3-μL aliquot of the plastic-solvent solution into the gas chromatographic apparatus. Compare the area of the resulting peaks with the areas produced by the injection of a standard solution. Prepare the standard solution by dissolving 20 mg to 30 mg of pure monomers in 50 mL of methylene chloride.

(b) Acrylic that does not dissolve shall be analyzed by swelling the plastic and extracting the soluble portion. Place a solid piece of insoluble acrylic plastic weighing about 1 g and 20 mL of methylene chloride in a glass bottle, and place on a shaker for 24 hr. After 24 hr, the fluid portion shall be analyzed for monomeric methyl methacrylate and monomeric ethyl acrylate per para. 2-3.5(a).

2-3.9 Windows Greater Than 6 in. Thick

Windows in excess of 6 in. (150 mm) thickness shall require material testing of two samples from the casting. One sample shall be taken from the surface of the casting. The second sample shall be taken from the interior of the casting at a distance from any surface equal to half the thickness. The properties of each sample shall meet the requirements of Table 2-3.4-2.

2-3.10 Bond Testing

The physical properties of bonds shall meet or exceed the following:

(a) The tensile strength of the bond shall be at least 50% of the parent material strength as established by the ASTM D638 test on five tensile coupons cut from a bond quality control specimen that was bonded at the same time and in the same manner as the acrylic castings intended for actual service.

(b) The significant and critical dimensions of inclusions, as well as the critical spacing between adjacent inclusions, shall not exceed those specified in para. 2-5.4 for a given window shape. The critical size of inclusion population shall not exceed the cross-sectional area of the bonded joint in square centimeters divided by 10. The critical density of population shall not exceed 2 inclusions per square centimeter of contiguous joint cross-sectional area.

2-3.11 Low Ultraviolet (UV) Cast Acrylic Cylinders (19)

Cast acrylic cylinders may be used without the addition of a UV stablilization agent, provided the following conditions are met:

(a) Storage and use are limited to a protected indoor environment where there is low exposure to UV radiation.

(b) The window markings shall also include "Low UV" as required in para. 2-6.1, as shall the associated ASME PVHO-1 forms.

(c) The window is not subject to life extension beyond design life.

(d) The window shall comply with all other relevant requirements of ASME PVHO-1.

ASMENORMDOC.COM : Click to view the full PDF of ASME PVHO-1 2019

2-4 FABRICATION

2-4.1 Responsibilities and Duties for Window Fabricators

The window fabricator's responsibilities include the following:

(a) compliance with this Standard and the appropriate referenced standard(s)

(b) procurement control of material, parts, and services

(c) establishing and maintaining a Quality Assurance Program in accordance with Section 3

(d) documenting the Quality Assurance Program in accordance with Section 3

(e) furnishing the purchaser with appropriate Certification Report(s)

(f) ensuring that the subcontracted activities comply with the appropriate requirements of this Standard

The PVHO window fabricator shall retain overall responsibility, including certifying and marking PVHO windows.

2-4.2 Quality Assurance and Marking

Windows shall be fabricated only from acrylic castings satisfying the requirements of Sections 2 and 3. This shall be accomplished by the window fabricator through compliance with the following procedures:

(a) The window fabricator shall establish and maintain a current and documented Quality Assurance Program that complies with Section 3.

(b) All castings used for fabrication of windows shall be marked prominently with letters and/or numbers that are traceable to the material certifications (see PVHO-1 Form VP-3, PVHO-1 Form VP-4, and PVHO-1 Form VP-1).

(c) Each window shall be numbered per para. 2-6.1, and these numbers shall be traceable to the castings from which they were fabricated. This traceability shall be certified on the fabrication data report, which shall provide, in equivalent form, the information shown on PVHO-1 Form VP-1.

2-4.3 Use of Solvent

No fabrication process, solvent, cleaner, or coolant that degrades the original physical properties of the acrylic casting shall be used during fabrication.

2-4.4 Identification

During the fabrication process, each window shall be identified with identification and fabrication verification documents containing pertinent material and fabrication data.

2-4.5 Annealing

All window material shall be annealed after all forming, machining, and machine polishing have been completed. All annealing shall take place in a forced-air circulation oven. Annealing shall be in accordance with Table 2-4.5-1. Time and temperature data for all annealing cycles shall be entered into PVHO-1 Form VP-1. A copy of the final anneal's time/temperature chart shall be attached to PVHO-1 Form VP-1.

2-4.6 Polishing

Hand lapping and hand polishing to remove scratches caused by handling may be performed after final annealing.

2-4.7 Inspection

Each window shall be inspected in accordance with subsection 2-5, after the final anneal.

2-5 INSPECTION

2-5.1 General

The quality control inspection shall consist of dimensional and visual checks to ensure the finished window meets the dimensional tolerances, material quality, and surface finish requirements specified in subsections 2-2 through 2-4. Windows that meet the requirements of subsections 2-2 through 2-4 and the requirements of this subsection shall be accepted. In particular, dimensional measurements shall be made to show compliance with para. 2-2.12.

2-5.2 Inspection Temperature and Orientation

All dimensional and angular measurements shall be performed at a material temperature of 70°F to 75°F (21°C to 24°C). For hyperhemisphere, cylindrical, and NEMO-type windows, measurements for deviation from true circular form, e.g., out-of-roundness and sphericity, shall be conducted at least 24 hr after placing the window in the orientation of, and supported in a similar manner to, the intended service. Out-of-roundness measurements of cylindrical windows shall be taken at both ends and at 25%, 50%, and 75% of the window length.

2-5.3 Surface Scratches

Scratches (or machining marks) on the surfaces of and inclusions in the body of the window shall not be acceptable if they exceed the specified critical dimension, critical spacing, critical size of population, or critical density of population, or are found in a critical location.

ASMENORMDOC.COM : Click to view the full PDF of ASME PVHO-1 2019

2-5.4 Inclusion Inspection

The critical dimensions of inclusions, critical spacing, critical size of inclusion population, critical location, and critical density of inclusion population depend on the shape of the window. Only inclusions whose diameter or length exceeds the following specified significant dimension shall be considered during a visual inspection; all others shall be disregarded.

(a) For spherical sectors with conical edge, hyperhemispheres, NEMO windows, conical frustums and double-beveled disks with $t/D_i \geq 0.5$, and cylinders under external pressure loading

(1) *significant dimension*: 0.015 in. (0.4 mm)

(2) *critical dimension*: $0.05t$

(3) *critical size of population*: total volume of window in cubic centimeters divided by 10 000

(4) *critical density of population*: one inclusion per 1 in.^{3} (16 cm^3) of contiguous volume

(5) *critical spacing between adjacent inclusions*: select the larger of the two adjacent inclusions and multiply its diameter by a factor of 2

(6) *critical locations*: no inclusions are permitted on or within critical spacing of all of the bearing and sealing surfaces

(b) For spherical sectors with square edge, hemispheres with equatorial flange, cylinders under internal pressure, conical frustums and double-beveled disks with $t/D_i < 0.5$, and disks

(1) *significant dimension*: 0.015 in. (0.4 mm)

(2) *critical dimension*: 0.030 in. (0.8 mm)

(3) *critical size of population*: total volume of window in cubic centimeters divided by 10 000

(4) *critical density of population*: one inclusion per 1 in.^{3} (16 cm^3) of contiguous volume

(5) *critical spacing between adjacent inclusions*: 0.25 in. (6 mm)

(6) *critical locations*: no inclusions are permitted on or within critical spacing of all of the surfaces

(c) Windows may be fabricated from acrylic castings with inclusions that exceed the 0.03-in. (0.8-mm) critical dimension specified by (b)(2), provided that the structural performance of the window is not compromised by the presence of these inclusions.

This is to be accomplished by restricting the inclusions to only certain types and sizes, and by compensating their effect on the critical pressure of the window with an increase in tensile strength of the acrylic, or an increase in design critical pressure of the finished window, or both.

(1) Inclusions are allowed in flat disks, cylinders under internal pressure, spherical sectors with square edges, hemispheres with equatorial flange, and double-beveled disks and conical frustums with $t/D_i < 0.5$, provided that the following requirements are met:

(-a) Significant dimension of the inclusion is 0.03 in. (0.8 mm).

(-b) Critical dimensions of the inclusions are

(-1) voids, specks, and grains of dirt; fragments of metal, wood, or rubber: 0.06 in. (1.5 mm)

(-2) hair or cloth fibers: 2 in. (50.8 mm) long

(-3) plastic foil fragments: 0.15 in. long × 0.06 in. wide × 0.03 in. thick (3.8 mm × 1.5 mm × 0.76 mm)

(-c) Critical size of population is total volume of the casting in cubic inches divided by 1,000.

(-d) Critical density of inclusion population is one inclusion per cubic inch.

(-e) Critical spacing between adjacent inclusions is 0.25 in. (6.35 mm).

(-f) Critical locations are such that inclusions are not permitted closer than 0.125 in. (3.2 mm) from the finished window surface.

(2) The finished window containing one or more inclusions shall satisfy one of the following structural requirements:

(-a) The minimum tensile strength of inclusion-free tensile test specimens from the lot of casting used in manufacture of windows shall be ≥11,000 psi, and the short-term design-critical pressure of the window shall meet the requirement of this Standard.

(-b) The minimum tensile strength shall be ≥10,000 psi, and the window's short-term design-critical pressure shall exceed the requirements of this Standard by ≥10%.

(-c) The minimum tensile strength shall be ≥9,000 psi, and the window's STCP shall exceed the requirements of this Standard by ≥20%.

2-5.4.1 Inclusion Inspection for Nonstandard Windows. Nonstandard geometry windows and standard window geometries with lower conversion factors shall not contain any inclusion with a critical dimension exceeding 0.015 in. (0.40 mm). (19)

2-5.5 Scratch Characterizations

Critical dimensions of scratches (or machining marks), critical spacing, critical sizes of scratch population, critical locations, and critical densities of scratch population depend on the shape of the window. Only scratches whose depth exceeds the significant dimension shall be considered during a visual inspection; all others shall be disregarded.

(a) For spherical sectors with conical edge, hyperhemispheres, NEMO windows, conical frustums and double-beveled disk with $t/D_i \geq 0.5$, and cylinders under external pressure loading

(1) *significant dimension*: 0.01 in. (0.25 mm)

(2) *critical dimension*: 0.02 in. (0.5 mm)

(3) *critical size of population*: total length of all scratches in centimeters equals total area of scratched surface in square centimeters divided by 1 000

(4) *critical density of population*: none specified

(5) *critical spacing between scratches*: none specified

(6) *critical locations*: no scratches are permitted on the bearing and sealing surfaces

ASMENORMDOC.COM : Click to view the full PDF of ASME PVHO-1 2019

(b) For conical frustums and double-beveled disks with $t/D_i < 0.5$, flat disks, and cylinders under internal pressure

(1) *significant dimension*: 0.003 in. (0.08 mm)

(2) *critical dimension*: 0.01 in. (0.25 mm)

(3) *critical size of population*: total length of all scratches in centimeters equals total area of scratched surface in square centimeters divided by 1 000

(4) *critical density of population*: none specified

(5) *critical spacing between scratches*: none specified

(6) *critical locations*: no scratches are allowed on the bearing and sealing surfaces, on any faces of double-beveled disks and cylinders, or on low-pressure faces of conical frustums and disks

(c) For spherical sectors with square edge and hemispheres with equatorial flange of acrylic

(1) *significant dimension*: 0.003 in. (0.08 mm)

(2) *critical dimension*: 0.01 in. (0.25 mm)

(3) *critical size of population*: total length of all scratches in centimeters equals total area of scratched surface in square centimeters divided by 1 000

(4) *critical density of population*: none specified

(5) *critical spacing between scratches*: none specified

(6) *critical locations*: no scratches are permitted on bearing and sealing surfaces, on the low-pressure face of spherical sector with square edge, or in the heel and instep areas of flanged hemispheres

2-5.6 Repairs

Repairs to new windows that do not meet acceptance criteria shall be performed in accordance with subsection 2-9.

2-5.7 Inspection Report

After the quality control inspection, each acceptable window shall be certified as to fabrication processes on a fabrication data report. The report shall be made on a form equivalent to PVHO-1 Form VP-1. This report shall be forwarded to the chamber manufacturer or user as a part of the certification package.

2-6 MARKING

(19) ### 2-6.1 Marking Location, Configurations

Identification of each window with the window fabricator's certification shall be located on the window's seating surface or on the outer diameter of the window. Identification shall consist of ½-in. (12.5-mm) letters and numbers made by the window fabricator with an indelible black felt marker, or ⅛-in. (3.2-mm) letters and numbers applied with epoxy ink. Epoxy ink shall not be used if the marked surface seats against a metal surface. The identification shall contain information per the following example:

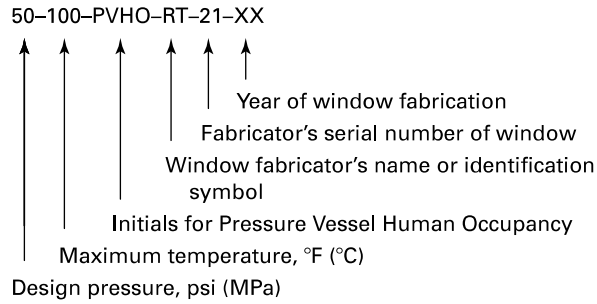

Windows fabricated without an ultraviolet (UV) stabilization agent shall add "Low UV" after the year of fabrication.

2-6.2 Certification Completion

At the time of marking, the window fabricator shall certify the overall fabrication of the window by completing window certification PVHO-1 Form VP-1. Only after completion of PVHO-1 Form VP-1 shall the window be considered to have met the requirements of this Standard, and the window can be marked in accordance with para. 2-6.1. This window certification shall be forwarded to the purchaser or used as part of the window certification package.

2-6.3 Marking Restrictions

The windows shall be marked by the window fabricator with PVHO identification per para. 2-6.1 only if the design, material manufacture, material testing, and fabrication have been completed and are on file with the window fabricator applying the markings after having met the requirements of para. 2-6.2.

2-6.4 Additional Marking

The window may also be marked with additional identifications. The size of letters, method of application, and their location on the window shall satisfy the requirements of para. 2-6.1.

2-6.5 Marking Certification Retention

The window certification and data reports (PVHO-1 Forms VP-1 through VP-5) shall be retained for each window as follows:

(a) One copy of PVHO-1 Forms VP-1 through VP-5 shall be retained by the window fabricator, and one copy of the forms shall be furnished to the window purchaser if the window fabricator performs the pressure test.

(b) If the window fabricator does not perform the pressure test, he/she shall note this on PVHO-1 Form VP-1. One copy of PVHO-1 Forms VP-1 through VP-4 shall be retained by the window fabricator, and one copy of the forms shall be furnished to the purchaser of windows.

(c) If the purchaser of windows does not require the window fabricator to perform the pressure test, the purchaser shall have the pressure test performed by a

ASMENORMDOC.COM : Click to view the full PDF of ASME PVHO-1 2019

qualified pressure test laboratory, or pressure test the windows according to subsection 2-7, either of which requires the completion of PVHO-1 Form VP-5.

(d) It shall be the responsibility of the owner/user and the chamber manufacturer to possess and retain PVHO-1 Forms VP-1 through VP-5 for a period not less than the design life of the window plus 2 yr.

(e) It shall be the responsibility of the window fabricator to possess and retain PVHO-1 Forms VP-1 through VP-4 (and PVHO-1 Form VP-5 if he/she performs the pressure test) for a period not less than the design life of the window plus 2 yr.

2-7 PRESSURE TESTING

2-7.1 Frequency

Each window shall be pressure tested at least once prior to being accepted for service.

2-7.2 Test Configuration

The pressure test shall take place with the window installed in the chamber or placed within a test fixture whose window seat dimensions, retaining ring, and seals are identical to those of the chamber.

(19) **2-7.3 Test Duration**

The window shall be pressurized with gas or water until design pressure is reached with a tolerance of +0%/−4% for test pressures less than 500 psi (3.46 MPa) and +0%/−2% for test pressures greater than 500 psi (3.46 MPa). The design pressure shall be maintained for not less than 1 hr, but not more than 4 hr. Pressurization and depressurization rates shall not exceed 650 psi/min (4.5 MPa/min).

2-7.4 Test Temperature

The temperature of the pressurizing medium during the test shall be the design temperature for which the window is rated with a tolerance of +0/−5°F (+0/−2.5°C). Brief deviations from these temperature tolerances are allowed, provided that the deviation does not exceed 10°F (5.5°C) and lasts less than 10 min.

2-7.5 Window Leakage

Windows that leak during the pressure tests shall be removed, fitted out with new seals, and retested. If, during the retest, the leakage continues, efforts will be made to complete the test by stopping the leak with a temporary seal. The inability of seals to operate properly during the test shall be noted in the test report, which shall be submitted at the conclusion of the pressure test to the chamber manufacturer/user.

2-7.6 Post-Test Inspection

At the conclusion of the pressure test, the windows shall be visually inspected for the presence of crazing, cracks, or permanent deformation. This examination may be performed without removal of the window from the chamber.

2-7.7 Rejection Criteria

Presence of crazing, cracks, or permanent deformation visible with the unaided eye (except for correction necessary to achieve 20/20 vision) shall be the cause of rejection of the windows and shall be so noted on the test report. Permanent deformation less than $0.001D_i$ in magnitude measured at the center of the window shall not be cause for rejection.

2-7.8 Alternate Test Procedure

A hydrostatic or pneumatic test in excess of design pressure may be substituted for the mandatory tests of paras. 2-7.3 and 2-7.4 for windows with a design temperature of 125°F (52°C) or less. During the hydrostatic or pneumatic test, the pressure shall be maintained for a minimum of 1 hr, but not more than 4 hr. The test pressure shall not exceed 1.5 times the design pressure or 20,000 psi (138 MPa), whichever is the lesser value. To prevent permanent deformation of windows tested above design pressure, the temperature of the pressurizing medium during the test shall be at least 25°F (14°C) lower than the design temperature. For windows with a 50°F (10°C) design temperature, the pressurizing medium during the test shall be 32°F to 40°F (0°C to 4°C). All the other requirements of the mandatory pressure test specified in paras. 2-7.5 through 2-7.7 shall be retained.

2-7.9 Reporting Requirements

After pressure testing, a pressure test report shall be completed to certify the results of the pressure test. The information shall be reported on a form equivalent to PVHO-1 Form VP-5 by the party who performs the pressure test.

2-7.10 Records Retention

Pressure test records shall be kept on file for at least the design life of the window plus 2 yr.

2-8 INSTALLATION OF WINDOWS IN CHAMBERS

2-8.1 Cleaning

The window cavity seat in the flange shall be thoroughly cleaned. Aliphatic naphtha and hexane are suitable fluids for cleaning.

ASMENORMDOC.COM : Click to view the full PDF of ASME PVHO-1 2019

2-8.2 Lubrication

The window cavity seats for all window shapes possessing conical bearing surfaces shall be thoroughly coated with grease prior to placement of the window inside the window cavity so that the greased surfaces will act as secondary seals. Silicone greases are suitable for this purpose. Other greases shall be checked for chemical compatibility with acrylic.

2-8.3 Assembly

After placement of the window inside the window cavity, the primary elastomeric seal shall be placed on the high-pressure face of the window and the retainer tightened until the seal compression reaches the minimum value specified in para. 2-2.11.

2-9 REPAIR OF DAMAGED WINDOWS PRIOR TO BEING PLACED IN SERVICE

2-9.1 General

New fabricated windows that do not meet the acceptance criteria of subsection 2-5, or windows that have been damaged during inspection, shipment, pressure testing, storage, handling, or installation in chambers but prior to being placed in service, may be repaired, provided the requirements of this subsection are met.

2-9.2 Damaged Window Criteria

For the purpose of this Standard, a damaged window is one that meets the criteria of Section 2, is marked per subsection 2-6, and has a Window Certification but has sustained damage that requires repair prior to being placed in service.

2-9.3 Dimensional Assessment

Windows are considered to be damaged when the window can no longer meet the dimensional tolerances and surface finishes specified by subsection 2-5. The assessment of damage shall be performed by an authorized representative of the chamber manufacturer or user or by a window fabricator.

2-9.4 Damage Severity Determination

The damage to windows, depending on its severity, may be repaired by the chamber user himself/herself or by an accredited fabricator of windows. Only slightly damaged windows may be repaired by the chamber user or his/her authorized agent, while severely damaged windows shall be repaired solely by a window fabricator.

2-9.5 Slightly Damaged Windows

The damage to windows is considered slight when it consists solely of scratches on the surfaces less than 0.020 in. (0.5 mm) deep or chips on the window edges less than 0.125 in. (3.2 mm) wide. Scratches deeper than 0.020 in. (0.5 mm), edge chips wider than 0.125 in. (3.2 mm), gouges, and cracks are considered severe damage.

2-9.6 Repairs of Slightly Damaged Windows

Slightly damaged windows may be repaired by the chamber user or his/her authorized agent, provided only hand sanding/polishing techniques are used, and the thickness and surface finish of the window after repair meet the requirements of Section 2. The use of power-driven tools (disk sanders, buffing wheels, lathes, milling machines, etc.) is not allowed. These repairs do not require post annealing.

2-9.7 Repair of Severely Damaged Windows

Special conditions are applicable to the repair of severely damaged windows.

(a) Severely damaged windows shall be repaired by a window fabricator.

(b) Repair of severely damaged windows shall be initiated by the window fabricator only after receipt of written authorization from the chamber manufacturer or user and inspection of the damaged window for identification marking. Damaged windows whose identification does not correspond to the written authorization shall not be repaired.

(c) The written authorization shall be accompanied by the original Design (PVHO-1 Form VP-2) and Fabrication Certifications (PVHO-1 Form VP-1).

(d) During the repair, the window fabricator may use all the fabrication processes customarily employed in the fabrication of new windows that meet the requirements of subsection 2-4.

(e) Upon completion of repair, the window shall be annealed according to the schedule of Table 2-4.5-1.

(f) After annealing, the repaired window shall be inspected to ensure that the finished window meets the material quality, minimum thickness, dimensional tolerance, surface finish, and inclusion limitation requirements of Section 2.

(g) Repaired windows shall be marked with the identification of the window fabricator performing the repair.

(h) The repair identification shall consist of 0.5-in. (12.5-mm) letters and numbers made with indelible black marker or 0.125-in. (3.2-mm) letters and numbers made with epoxy ink, located on the window's seating surface.

(i) The repair identification shall contain the following information, as per the following example:

ASMENORMDOC.COM : Click to view the full PDF of ASME PVHO-1 2019

The repair identification shall not obscure, in any manner, the original window identification.

(j) Original window identification marking that has been accidentally or intentionally removed during repair operations may be reapplied at this time, provided the restored original identification marking has identical wording to the original one that was removed, and the Repair Certification reflects this fact.

(k) The design life of the repaired window is determined by the original fabrication date shown on the window identification marking.

2-9.8 Repair of Spherical Window by Spot Casting

Windows with spherical surfaces whose dimensional tolerances, surface finish, or inclusions exceed the limits specified in paras. 2-2.12, 2-5.3, and 2-5.5 may be repaired by spot casting, provided the following conditions are satisfied:

(a) The repaired spot shall be subjected only to compressive stresses in service.

(b) The casting mix used for spot repairs shall have the same chemical composition and shall be polymerized in the same manner as the casting mix in the window casting.

(c) For repaired spots located in areas within 2 deg of the window's edge circumference, or areas not visible from the interior of the pressure vessel by an observer in a typical position required for operation of the vessel, the following limitations apply:

(1) The volume of a single repaired spot shall not exceed 10%, and the cumulative volume of all repaired spots shall not exceed 20% of the total window volume.

(2) There is no limit on the number of repaired spots.

(d) For repaired spots located in areas outside 2 deg of the window's edge circumference, and visible from the interior of the pressure vessel to an observer in a typical position required for operation of the vessel, the following limitations apply:

(1) The area of any repaired spot shall not exceed 0.025% of the total window area.

(2) Only two repaired spots are permitted.

(e) After completion of machining and polishing operations, the window shall be annealed per para. 2-4.5.

(f) Location and extent of spot casting repairs shall be noted on a sketch attached to PVHO-1 Form VP-6.

2-10 GUIDELINES FOR APPLICATION OF THE REQUIREMENTS OF SECTION 2

2-10.1 Introduction

(a) Section 2 presents the necessary information to design, fabricate, and pressure test acrylic windows that, when mounted and sealed in metallic seats, form the viewport assemblies acceptable as pressure-resistant barriers in pressure vessels for human occupancy.

(b) Restrictions are imposed on the service conditions to which the viewport can be subjected to preclude catastrophic failure of the window during its rated life. In order for the window to meet the high standard of safety demanded by human occupancy of the pressure vessel, each step in the production of the windows shall be certified for conformance to this Standard.

(c) Only high-quality cast acrylic (polymethyl methacrylate) is acceptable as the material for fabrication of windows under this Standard. Conformance of the material to the specifications of this Standard shall be proven by testing of material coupons (see subsection 2-3) and certification (PVHO-1 Forms VP-3 and VP-4).

2-10.2 Sample Design Procedures

(a) The design procedure consists of a series of steps that allow the engineer to design a window meeting the requirements of this Standard (see subsection 2-2).

Step 1. Determine the design pressure, P, and temperature of the pressure vessel. Use the values as maximum design allowable for windows.

Step 2. Select the designed window shape from available standard window geometries (Figures 2-2.2.1-1 through 2-2.2.1-4). Note the restrictions on the service in which they can be placed (see paras. 2-2.2 and 2-2.3).

If the design requirements cannot be met by a standard window geometry, a nonstandard window geometry of your own design may be chosen. In that case, disregard the remainder of the design steps in (a) through (c) and follow instead the procedures specified in para. 2-2.6.

Step 3. Select the conversion factor (CF) appropriate for the chosen standard window geometry, pressure range, and temperature range (Tables 2-2.3.1-1 through 2-2.3.1-4). Use the pressure range into which the design pressure falls. The CF given by the table represents the lowest value acceptable to this Standard. Wherever feasible, select a higher value than shown in the tables.

Step 4. Calculate the short-term critical pressure (STCP) of the window by multiplying the design pressure, P, by the CF selected in Step 3.

Step 5. Calculate the dimensionless ratio(s) t/D_i or t/R for the chosen window geometry by finding the appropriate graph that relates the STCP to the window's dimensionless ratio (Figures 2-2.5.1-1 through 2-2.5.1-12). Draw a horizontal line from the appropriate STCP on

ASMENORMDOC.COM : Click to view the full PDF of ASME PVHO-1 2019

the ordinate to the graph. From where it intersects the graph, drop a vertical line to the abscissa. The intersection with the abscissa provides the sought-after dimensionless ratio. For design pressures, P, above 10,000 psi (69 MPa), use Table 2-2.3.2-1 to derive the required dimensional ratios. This table applies only to conical frustum windows with an included conical angle $\alpha \geq 60$ deg.

Step 6. Calculate the nominal window's dimensions on the basis of the dimensionless ratio. Wherever it is feasible, increase the nominal thickness to provide extra stock for future operational contingencies.

Step 7. Apply angular and dimensional tolerances to the nominal dimensions and specify surface finishes on the window (see para. 2-2.12). Enter all applicable data on drawings and PVHO-1 Form VP-2.

(b) The windows can achieve the predicted STCPs only if they are mounted in seats with appropriate cavity dimensions, stiffness, and surface finishes (see paras. 2-2.7, 2-2.10, and 2-2.12).

Step 1. Calculate seat cavity dimensions on the basis of Figures 2-2.10.1-1 through 2-2.10.1-8. For windows with conical bearing surfaces, the magnitude of seat cavity surface overhang depends on both the included conical angle and the operational pressure range. The magnitude of overhang is given in terms of D_i/D_f ratios for any given combination of operational pressure ranges and conical angles. Operational pressure ranges 1, 2, 3, and 4 correspond to 0 psi to 2,500 psi, 2,500 psi to 5,000 psi, 5,000 psi to 7,500 psi, and 7,500 psi to 10,000 psi. For operational pressures above 10,000 psi (69 MPa), use Table 2-2.3.2-1.

Step 2. Calculate the stiffness compliance of the window seat with analytical formulas or finite element stress analysis computer programs to meet the requirements of para. 2-2.9. Since the window mounting forms a reinforcement around the penetration in the pressure vessel, its cross section shall also meet the requirements of the applicable Division of ASME BPVC, Section VIII.

Step 3. Apply angular and dimensional tolerances to the nominal dimensions and specify surface finishes on the seat cavity (see paras. 2-2.10 and 2-2.12). Enter all applicable data on the window seat drawing.

(c) Only certain sealing arrangements have been found to be successful with acrylic windows serving as pressure boundaries (see para. 2-2.11).

Step 1. Some of the proven seal designs acceptable under this Standard are shown in Figures 2-2.5.1-1 through 2-2.5.1-6, 2-2.5.1-12, 2-2.10.1-2, and 2-2.10.1-5 through 2-2.10.1-8. Select the most appropriate sealing arrangement for your operational conditions. The bevels on the edges of windows cannot exceed the limits shown in Figures 2-2.11.10-1 and 2-2.11.10-2.

Step 2. Seal designs that deviate from the requirements of this Standard shall be subjected to an experimental validation program that will define their effect on the design life of the windows (see para. 2-2.7).

2-10.3 Sample Purchase Specification and Product Reviews

The designed window, in order to achieve the STCP, shall be fabricated by an accredited window fabricator using materials and a production process that meet the requirements of subsections 2-3 and 2-4, respectively.

Step 1. Ensure that the request for quotation and all drawings carry the following note:

"The cast acrylic, fabrication procedure, Quality Assurance Program, and finished window shall meet all the requirements of ASME PVHO-1."

This note alerts the fabricators to the additional factors imposed by the certification requirements of this Standard.

Step 2. Provide the successful bidder with PVHO-1 Form VP-2, filled out by the window designer. PVHO-1 Form VP-2, together with the window drawing, shall form the basis for future identification of the window.

Step 3. Upon receiving the window from the window fabricator, inspect the finished product dimensionally and visually for compliance to this Standard (see para. 2-2.12 and subsection 2-4). Review all of the paperwork, which shall accompany the window (PVHO-1 Forms VP-1 through VP-4). Check for completeness and signatures. Compare the marking on the window bearing surface with

(a) the identification number on PVHO-1 Form VP-1.

(b) the design temperature and pressure on PVHO-1 Form VP-2. Only when the window complies with the requirements imposed by this Standard, and the accompanying Window Certification, PVHO-1 Forms VP-1 through VP-4, is complete, can the fabrication be considered to have met all of the contractual obligations imposed by the above note on the window drawing.

2-10.4 Sample Pressure Test Instructions

The window can now be installed into a new pressure chamber or pressure tested in a test fixture and placed in storage for future use as a replacement. If the window is tested in a new chamber (see subsection 2-7 for details of pressure testing), the test shall be conducted without human occupants.

Step 1. Immediately after the pressure test, inspect the window visually for the presence of crazing, cracks, fractures, or permanent deformation.

Step 2. If the window passed the post-pressure test inspection successfully, fill out PVHO-1 Form VP-5.

Step 3. Review certifications, PVHO-1 Forms VP-1 through VP-5, for completeness.

2-10.5 Sample Calculations

The following sample calculations of hypothetical window and window seat dimensions illustrate the design procedure:

Step 1.1. Determine design conditions:

ASMENORMDOC.COM : Click to view the full PDF of ASME PVHO-1 2019

Design pressure = 1,000 psi
Design temperature = 125°F
Window diameter = 10 in.

Step 1.2. Select window shape:

Conical frustum with 90 deg included angle (Figure 2-2.2.1-1)

Step 1.3. Select conversion factor:

CF = 10, N = 1 (Table 2-2.3.1-2)

Step 1.4. Calculate STCP:

$$\begin{aligned} \text{STCP} &= \text{CF} \times P = 10 \times 1{,}000 \\ &= 10{,}000 \text{ psi } (68.96 \text{ MPa}) \end{aligned}$$

Step 1.5. Select the dimensionless ratio for windows:

t/D_i = 0.41 for STCP = 68.96 MPa
α = 90 deg (Figure 2-2.5.1-5)

Step 1.6. Calculate nominal window dimensions:

t/D_i = 0.41
D_i = 10 in.
α = 90 deg
t = 0.41 × 10 in. = 4.1 in.

Add 0.1 in. to thickness for future operational contingencies:

Nominal t = 4.2 in.
Nominal angle = 90 deg
Nominal D_i = 10 in.
Nominal D_o = 18.4 in. (calculated)

Step 1.7. Apply dimensional tolerances to windows (para 2-2.12):

D_o = 18.400 +0.000/−0.037 in. (to sharp edge)
α = 90 +0.25/−0.00 deg
Bearing surface finish = 32 μin. RMS

Step 2.1. Calculate nominal dimensions for seat cavity:

D_o = 18.400 in.
α = 90 deg
D_i/D_f = 1.03 for pressure range N = 1 and included angle 90 deg
D_f = 10.000/1.03 = 9.709 in. (Figure 2-2.10.1-1)

Step 2.2. Calculate cross section of window mounting. (Use procedure of your own choice; NSRDC Report 1737, "Structural Design of Viewing Ports for Oceanographic Vehicles," by K. A. Nott, 1963, can be very helpful.)

Step 2.3. Apply dimensional tolerances to window seat.

Step 3.1. Select sealing arrangement: neoprene O-ring seal compressed against beveled edge of major window diameter by a flat retaining ring (Figure 2-2.5.1-4). The magnitude of the bevel cannot exceed the limits shown in Figure 2-2.11.10-1. The size of the bevel chosen will provide adequate compression to a nominal 0.25-in. diameter O-ring.

Step 3.2. Enter the following final viewport dimensions on drawing:

(a) Window:
D_o = 18.400 +0.00/−0.037 in. (to sharp edge)
t = 4.200 +0.020/−0.00 in.
α = 90 +0.25/−0.000 deg

(b) Seal:
O-ring thickness = ¼ in. (nominal)
O-ring inside diameter = 17.75 in. (nominal)

(c) Seat:
D_o = 18.400 +0.020/−0.000 in.
D_f = 9.709 +0.010/−0.000 in.
α = 90 +0.000/−0.25 deg

ASMENORMDOC.COM : Click to view the full PDF of ASME PVHO-1 2019

PVHO-1 Form VP-1 Fabrication Certification for Acrylic Windows

Window Drawing No. _____

Window Identification _____

Material Stock Description

Manufacturer of acrylic _____

Trade name _____

Casting shape _____ Nominal thickness _____

Lot number _____ Casting number _____

Certified for conformance to Table 2-3.4-1 by _____ Date _____

Certified for conformance to Table 2-3.4-2 by _____ Date _____

Window Description

Maximum allowable working pressure rating _____ psi _____ MPa

Maximum temperature rating _____ °F _____ °C

Window designed by _____
(name of company and designer)

Joint bonding (if applicable)

Manufacturer of acrylic cement _____

Trade name of cement _____

Curing means and duration _____

Average tensile strength (per ASTM D638) _____

Joint quality conforms to para. 2-3.10 (yes/no) _____

Polishing agents _____

Cleaning agent _____

Fabrication Process Data

First annealing temperature (if applicable) _____

Duration _____ Cooling rate _____

Intermediate annealing temperature (if applicable) _____

Duration _____ Cooling rate _____

Final annealing temperature (chart required) _____

Duration _____ Cooling rate _____

Dimensional checks

Actual outside diameter, D_o _____ Actual inside diameter, D_i _____

Actual thickness, t_{max} and t_{min} _____ Actual included angle, α _____

Actual sphericity (maximum deviation from specified sphericity measured by a template on the concave or convex surface) _____

Conforms/deviates from specification for spot casting repairs _____

Window fabricator has tested windows _____ Yes _____ No

Window fabricator has completed PVHO-1 Form VP-5 _____ Yes _____ No

The window identified above has been fabricated in accordance with the material and fabrication requirements of the Safety Standard for Pressure Vessels for Human Occupancy, ASME PVHO-1–_____ edition, and company _____ _____ drawing number _____ , revision _____ , dated _____ .

_____ (authorized representative of window fabricator)

_____ (date)

_____
(name and address of window fabricator)

GENERAL NOTE: This form may be reproduced and used without written permission from ASME if used for purposes other than republication.

ASMENORMDOC.COM : Click to view the full PDF of ASME PVHO-1 2019

(19)

PVHO-1 Form VP-2 Acrylic Window Design Certification

Window Description **Window Drawing No.** _____

Maximum allowable working pressure _____ psi _____ MPa

Maximum design temperature _____ °F _____ °C Minimum design temperature _____ °F _____ °C

Window shape _____

Conversion factor table number _____

Pressure range, N _____ Conversion factor, CF _____ at _____ °F _____ °C

Maximum internal ambient temp. _____ °F _____ °C Minimum external ambient temp. _____ °F _____ °C

Short-term critical pressure and figure no. _____

Experimental Verification [Note (1)]

Thickness, t (actual) _____

D_o (actual) _____

D_i (actual) _____

Water temperature _____ °F _____ °C

No. 1 _____ No. 2 _____

No. 3 _____ No. 4 _____

No. 5 _____ STCP _____

(Note each test specimen FS for full scale or MS for model scale.)

Type of failure _____

Test conducted at _____

Test supervised by _____

Window Design

Inner diameter, D_i (nominal) _____ Outer diameter, D_o (nominal) _____

Included angle (nominal) _____ External radius of curvature (nominal) _____

Minimum t (calculated) _____ Minimum t/D_i (calculated) _____

D_o/D_f (nominal) _____ D_i/D_f (nominal) _____

Minimum D_i (calculated) _____ Maximum D_f (calculated) _____

Diametral interference/clearance between D_o of window and window seat at maximum design temperature (calculated) _____

Diametral interference/clearance between D_o of window and window seat at minimum design temperature (calculated) _____

Actual t (specified on drawings) _____

Actual D_i (specified on drawings) _____

Actual D_f (specified on drawings) _____ Actual D_o (specified on drawings) _____

Actual external radius of curvature (specified on drawings) (spherical or cylindrical) _____

Drawing no. of window _____ Drawing no. of flange _____ Drawing no. of assembly _____

Description of pressure vessel (for which the window has been designed) _____

The viewport design complies with all of the requirements of the Safety Standard for Pressure Vessels for Human Occupancy, subsection 2-2.

_____ (viewport designer) _____ (date)

_____ (authorized representative of chamber manufacturer or owner) _____ (date)

_____ (name and address of chamber manufacturer or owner) _____ (date)

GENERAL NOTE: This form may be reproduced and used without written permission from ASME if used for purposes other than republication.

NOTE:
(1) If STCP is determined experimentally according to para. 2-2.5.2, then the critical pressures of all five windows tested, the testing laboratory, and the test supervisor should be noted here.

ASMENORMDOC.COM : Click to view the full PDF of ASME PVHO-1 2019

Figure 2-2.2.1-1 Standard Window Geometries — Part 1

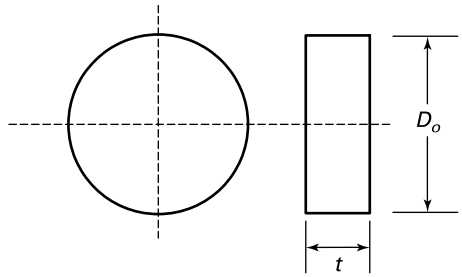

$t \geq 1/2$ in. (12.5 mm)
$t/D_o \geq 0.08$

(a) Flat Disk Window

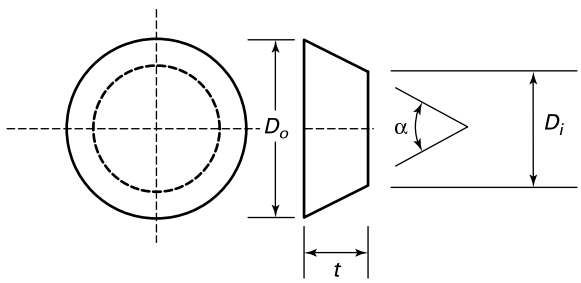

$t \geq 1/2$ in. (12.5 mm)
$t/D_i \geq 0.125$
$\alpha \geq 60$ deg

(b) Conical Frustum Window

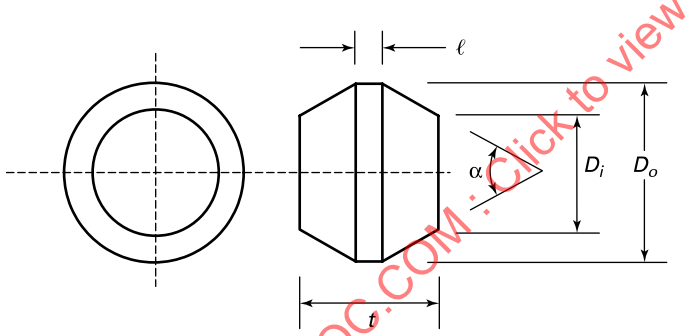

$t \geq 1/2$ in. (12.5 mm)
$t/D_i \geq 0.250$
$\alpha \geq 60$ deg
$\ell \leq 0.25t$

(c) Double-Beveled Disk Window

ASMENORMDOC.COM : Click to view the full PDF of ASME PVHO-1 2019

Figure 2-2.2.1-2 Standard Window Geometries — Part 2

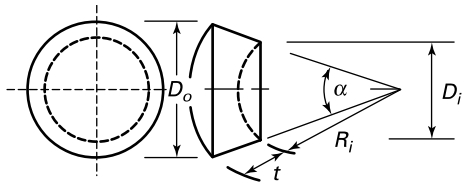

$t \geq 1/2$ in. (12.5 mm)
$\alpha \geq 30$ deg
$t/R_i \geq 0.09$ for $\alpha \geq 60$ deg
$t/R_i \geq 0.06$ for $\alpha \geq 90$ deg
$t/R_i \geq 0.03$ for $\alpha = 180$ deg

(a) Spherical Sector Window With Conical Edge

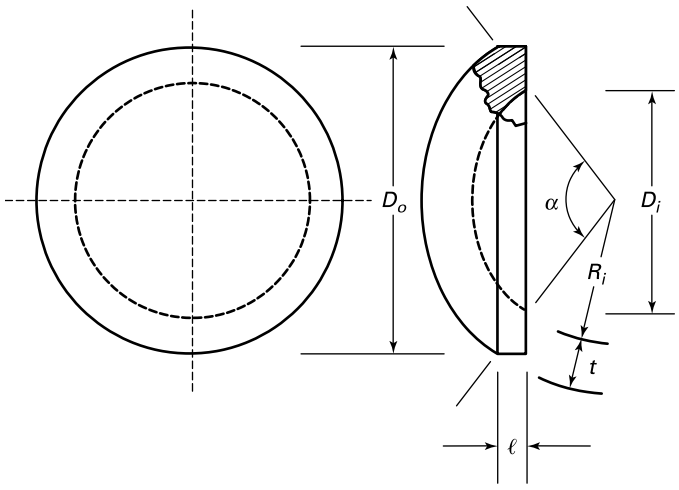

$t \geq 1/2$ in. (12.5 mm)
30 deg $\leq \alpha \leq$ 150 deg
$t/R_i \geq 0.03$
$D_i = 2R_i \sin \alpha/2$
$D_o = 2R_o \sin \alpha/2$
$R_o = R_i + t$
$\ell = t \sin (90 \text{ deg} - \alpha/2)$

(b) Spherical Sector Window With Square Edge

ASMENORMDOC.COM : Click to view the full PDF of ASME PVHO-1 2019

Figure 2-2.2.1-3 Standard Window Geometries — Part 3

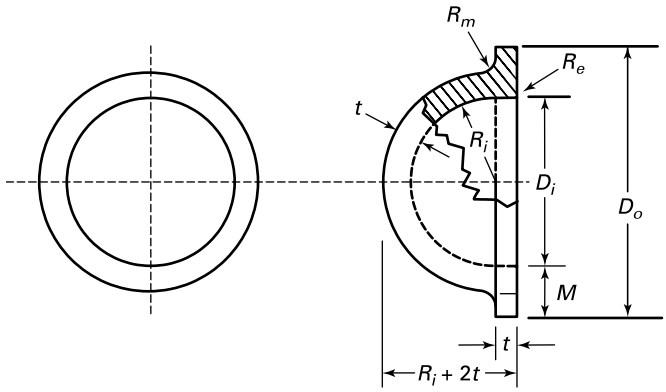

$t \geq 1/2$ in. (12.5 mm)
$t/R_i > 0.03$
$D_o = (D_i + 2M)$
$R_m \geq 1/8$ in. (3.0 mm)
$0.5 \text{ mm} \leq R_e \leq 0.125t$
$1.5t \leq M \leq 2.0t$
$R_o = R_i + t$

(a) Hemispherical Window With Equatorial Flange

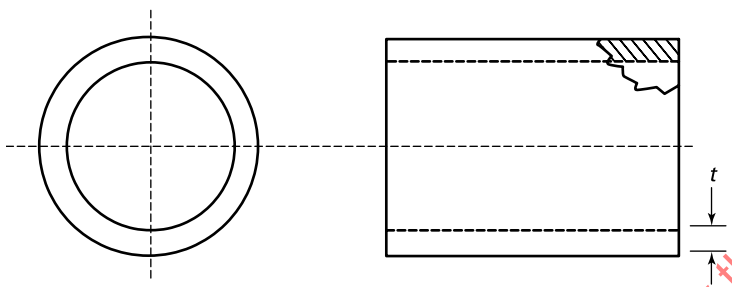

$t \geq 1/2$ in. (12.5 mm)

(b) Cylindrical Window

ASMENORMDOC.COM : Click to view the full PDF of ASME PVHO-1 2019

Figure 2-2.2.1-4 Standard Window Geometries — Part 4

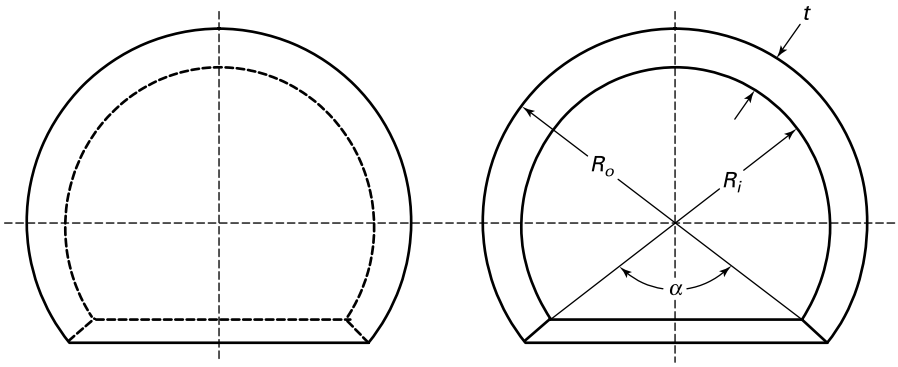

$t \geq 1/2$ in. (12.5 mm)
$0.03 \leq t/R_o \leq 0.355$
$\alpha \leq 100$ deg

(a) Hyperhemispherical Window

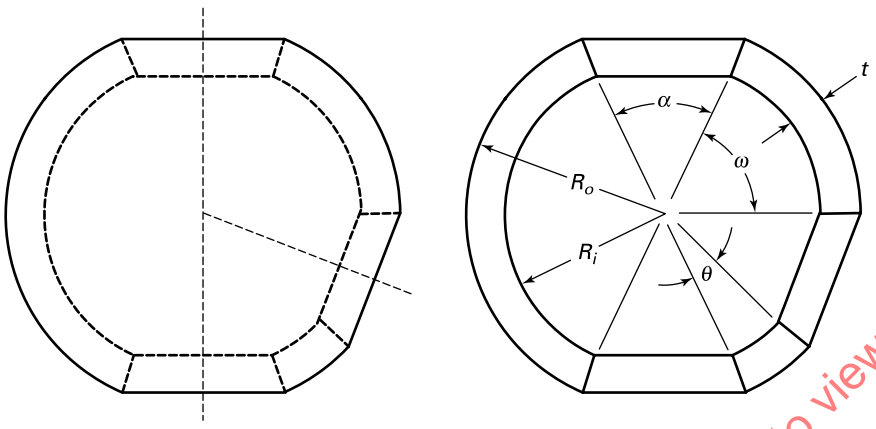

$t \geq 1/2$ in. (12.5 mm)
$0.03 \leq t/R_o \leq 0.355$
$\alpha \leq 50$ deg
ω, θ = spacing between adjacent penetrations shall exceed $\alpha/2$ of the larger penetrations

(b) NEMO Window

ASMENORMDOC.COM : Click to view the full PDF of ASME PVHO-1 2019

Table 2-2.3.1-1 Conversion Factors for Acrylic Flat Disk Windows

Operational Pressure Ranges	Temperature, °F (°C)				
	50 (10)	75 (24)	100 (38)	125 (52)	150 (66)
N = 1 2,500 psi (17.2 MPa)	CF = 5	CF = 6	CF = 8	CF = 10	CF = 16
N = 2 5,000 psi (34.5 MPa)	CF = 5	CF = 6	CF = 8	CF = 10	4,000 psi (27.6 MPa)
N = 3 7,500 psi (51.7 MPa)	CF = 5	CF = 6	7,000 psi (48.3 MPa)		

GENERAL NOTES:
(a) The conversion factors (CF) in this Table apply only to short-term critical pressures (STCP) plotted in Figures 2-2.5.1-1 through 2-2.5.1-3.
(b) Dotted lines refer to intermediate pressure ranges as indicated by the adjacent pressure figures.
(c) Interpolation between CFs is allowed.

Table 2-2.3.1-2 Conversion Factors for Acrylic Conical Frustum Windows and Double-Beveled Disk Windows

Operational Pressure Ranges	Temperature, °F (°C)				
	50 (10)	75 (24)	100 (38)	125 (52)	150 (66)
N = 1 2,500 psi (17.2 MPa)	CF = 5	CF = 6	CF = 8	CF = 10	CF = 16
	Conversion factors for these pressures shall be interpolated between the upper and lower values shown.				4,500 psi (31 MPa)
N = 2 5,000 psi (34.5 MPa)	CF = 4	CF = 5	CF = 7	CF = 9	
N = 3 7,500 psi (51.7 MPa)	CF = 4	CF = 5			
N = 4 10,000 psi (69 MPa)	CF = 4	CF = 5	8,000 psi (55.2 MPa)		

GENERAL NOTES:
(a) The CFs in this Table apply only to STCPs plotted in Figures 2-2.5.1-4 and Figures 2-2.5.1-5.
(b) Dotted lines refer to intermediate pressure ranges as indicated by the adjacent pressure figures.
(c) Interpolation between CFs is allowed.

Table 2-2.3.1-3 Conversion Factors for Acrylic Spherical Sector Windows With Conical Edge, Hyperhemispherical Windows With Conical Edge, and NEMO-Type Windows With Conical Edge

Operational Pressure Ranges	Temperature, °F (°C)				
	50 (10)	75 (24)	100 (38)	125 (52)	150 (66)
N = 1 2,500 psi (17.2 MPa)	CF = 4	CF = 6	CF = 8	CF = 10	CF = 16 .....1,500 psi..... (10.3 MPa)
N = 2 5,000 psi (34.5 MPa)	CF = 4	CF = 6	CF = 8	CF = 10 ..... 3,500 psi (24.1 MPa)	3,000 psi (20.7 MPa)
N = 3 7,500 psi (51.7 MPa)	CF = 4				

GENERAL NOTES:
(a) The CFs in this Table apply only to STCPs plotted in Figures 2-2.5.1-6 and Figures 2-2.5.1-7 for spherical sector windows with conical edge and Figures 2-2.5.1-14 and 2-2.5.1-15 for hyperhemispherical windows with conical edge and NEMO-type windows with conical penetrations.
(b) Dotted lines refer to intermediate pressure ranges as indicated by the adjacent pressure figures.
(c) Interpolation between CFs is allowed.

ASMENORMDOC.COM : Click to view the full PDF of ASME PVHO-1 2019

Table 2-2.3.1-4 Conversion Factors for Acrylic Spherical Sector Windows With Square Edge and Hemispherical Windows With Equatorial Flange

Operational Pressure Ranges	Temperature, °F (°C)				
	50 (10)	75 (24)	100 (38)	125 (52)	150 (66)
N = 1 2,500 psi (17.2 MPa)	CF = 5	CF = 7	CF = 9	CF = 11	CF = 17 ..... 1,500 psi ..... (10.3 MPa)
N = 2 5,000 psi (34.5 MPa)	CF = 5	CF = 7	CF = 9	3,000 psi (20.6 MPa)	
N = 3 7,500 psi (51.7 MPa)	CF = 5				

GENERAL NOTES:
(a) The CFs in this Table apply only to STCPs plotted in Figures 2-2.5.1-6 and 2-2.5.1-7.
(b) Dotted lines refer to intermediate pressure ranges as indicated by the adjacent pressure figures.
(c) Interpolation between CFs is allowed.

Table 2-2.3.1-5 Conversion Factors for Acrylic Cylindrical Windows

Part A: Internal Pressure					
Operational Pressure Ranges	Temperature, °F (°C)				
	50 (10)	75 (24)	100 (38)	125 (52)	150 (66)
N = 1 250 psi (1.7 MPa)	CF = 13	CF = 14	CF = 15	CF = 20	CF = 25

Part B: External Pressure					
Operational Pressure Ranges	Temperature, °F (°C)				
	50 (10)	75 (24)	100 (38)	125 (52)	150 (66)
N = 1 2,500 psi (17.2 MPa)	CF = 6	CF = 7	CF = 9	CF = 11	CF = 17

GENERAL NOTES:
(a) The CFs in Part A of this Table apply only to STCPs plotted in Figures 2-2.5.1-8 and 2-2.5.1-9.
(b) The CFs in Part B of this Table apply only to STCPs plotted in Figures 2-2.5.1-10 through 2-2.5.1-13. Since the tube may fail due to yielding of material (Figure 2-2.5.1-8) or elastic buckling (Figures 2-2.5.1-9 through 2-2.5.1-11), both modes of failure shall be considered in selection of t/D ratio. The mode of failure that is chosen as the design criterion depends on which of the failure modes requires a higher t/D_i ratio for the desired STCPs. The mode of failure requiring a higher t/D_i ratio is chosen as the design criterion.
(c) Interpolation between CFs is allowed.

ASMENORMDOC.COM : Click to view the full PDF of ASME PVHO-1 2019

Table 2-2.3.2-1 Conical Frustum Windows for Design Pressures in Excess of 10,000 psi (69 MPa)

Design Pressure		Temperature Ranges									
		≤50°F (10°C)					≤75°F (24°C)				
			D_i/D_f					D_i/D_f			
psi	MPa	t/D_i	60 deg	90 deg	120 deg	150 deg	t/D_i	60 deg	90 deg	120 deg	150 deg
11,000	75.86	1.0	1.13	1.17	1.23	1.69	1.1	1.13	1.17	1.23	1.69
12,000	82.76	1.1	1.13	1.17	1.23	1.69	1.2	1.13	1.17	1.23	1.69
13,000	89.66	1.2	1.13	1.17	1.23	1.69	1.3	1.13	1.17	1.23	1.69
14,000	96.55	1.3	1.13	1.17	1.23	1.69	1.4	1.13	1.17	1.23	1.69
15,000	103.45	1.4	1.13	1.17	1.23	1.69	1.5	1.13	1.17	1.23	1.69
16,000	110.34	1.5	1.20	1.26	1.53	2.48	1.6	1.20	1.26	1.53	2.48
17,000	117.24	1.6	1.20	1.26	1.53	2.48	1.7	1.20	1.26	1.53	2.48
18,000	124.14	1.7	1.20	1.26	1.53	2.48	1.8	1.20	1.26	1.53	2.48
19,000	131.03	1.8	1.20	1.26	1.53	2.48	1.9	1.20	1.26	1.53	2.48
20,000	137.93	1.9	1.20	1.26	1.53	2.48	2.0	1.20	1.26	1.53	2.48

GENERAL NOTE: D_i/D_f ratio refers to the conical frustum seat specification shown in Figure 2-2.10.1-1.

Figure 2-2.5.1-1 Short-Term Critical Pressure of Flat Disk Acrylic Windows — Part 1

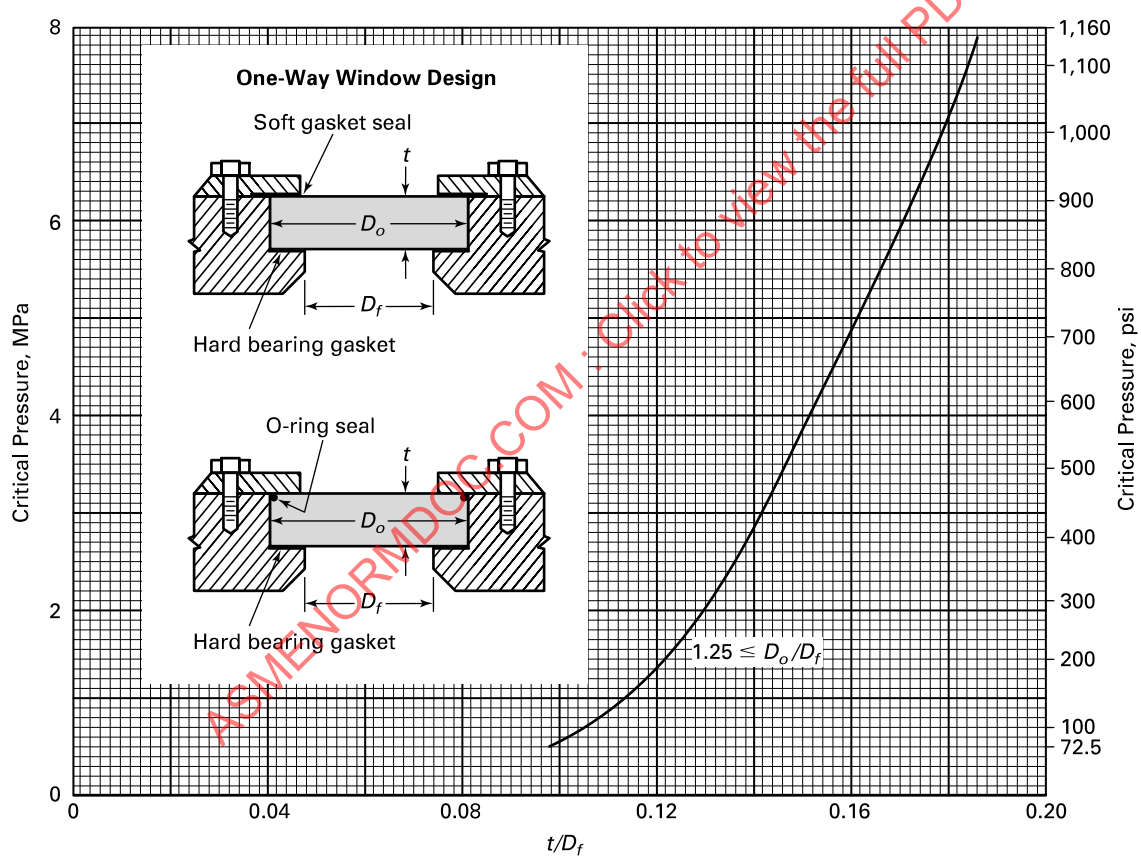

ASMENORMDOC.COM : Click to view the full PDF of ASME PVHO-1 2019

Figure 2-2.5.1-2 Short-Term Critical Pressure of Flat Disk Acrylic Windows — Part 2

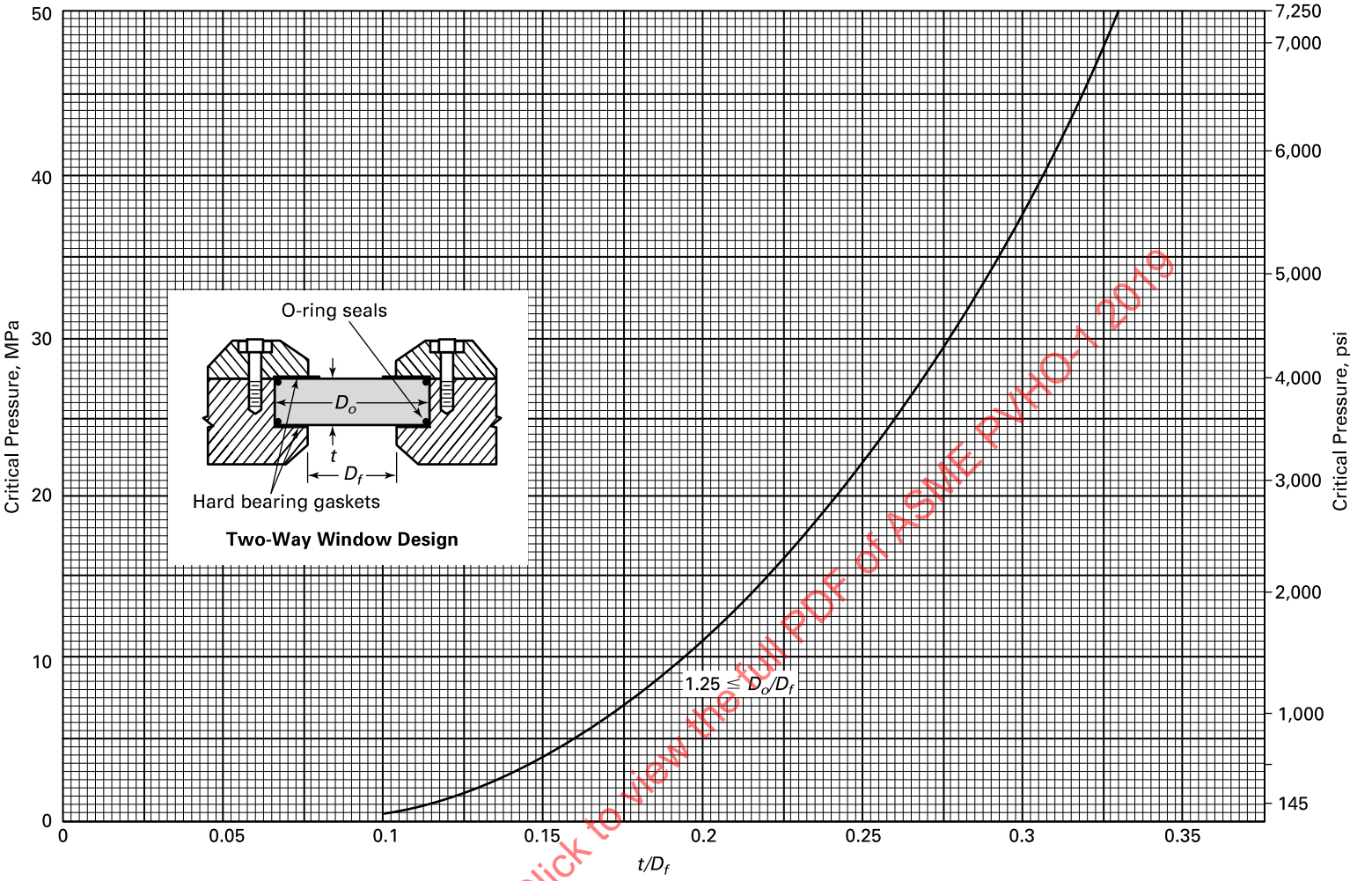

ASMENORMDOC.COM : Click to view the full PDF of ASME PVHO-1 2019

Figure 2-2.5.1-3 Short-Term Critical Pressure of Flat Disk Acrylic Windows — Part 3

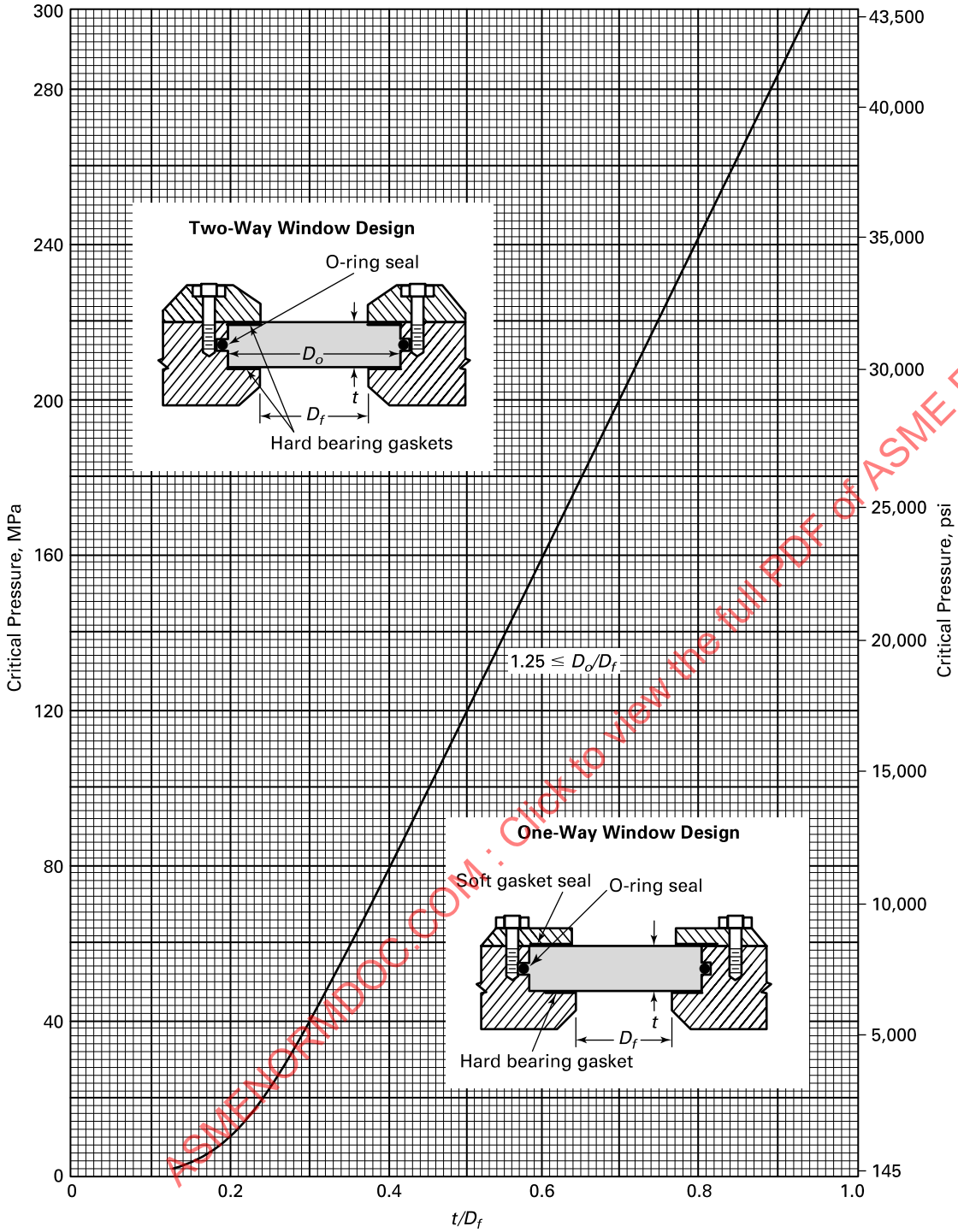

ASMENORMDOC.COM : Click to view the full PDF of ASME PVHO-1 2019

Figure 2-2.5.1-4 Short-Term Critical Pressure of Conical Frustum Acrylic Windows — Part 1

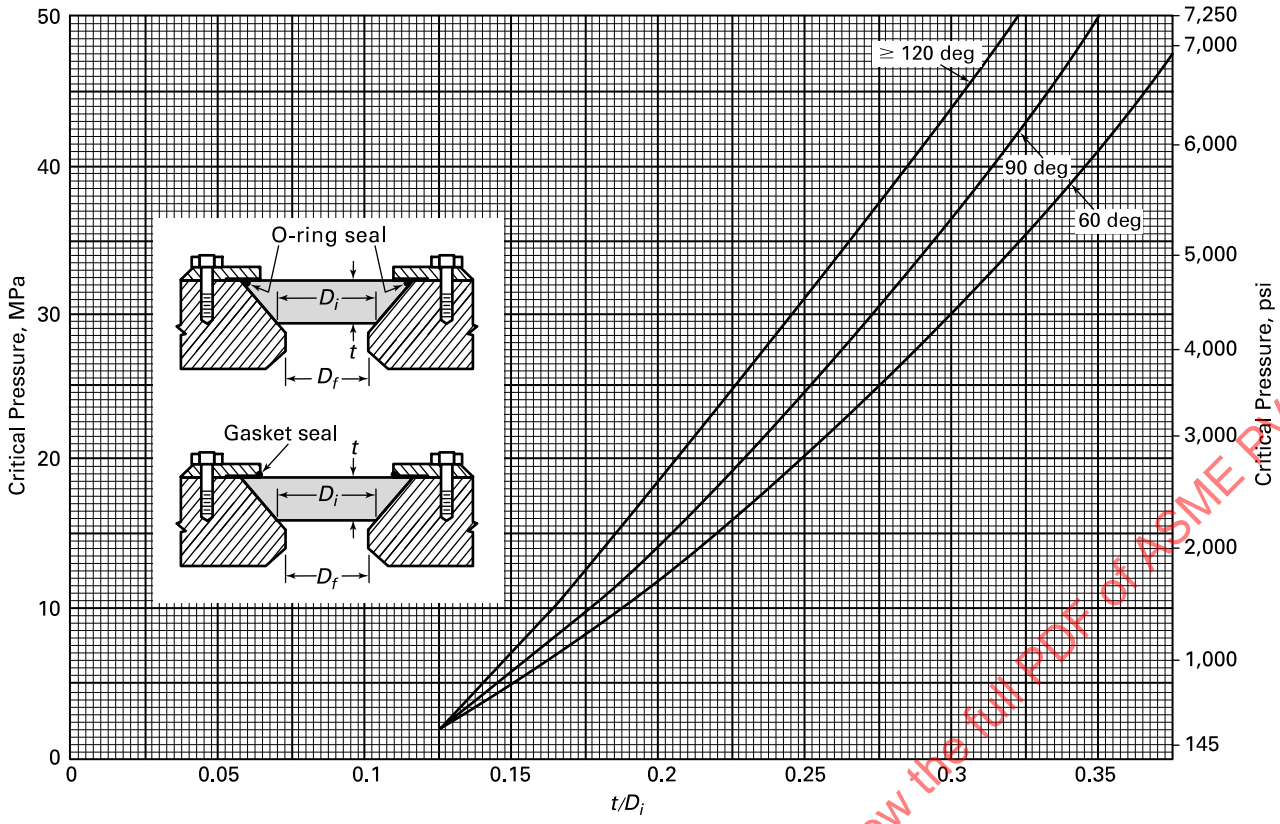

ASMENORMDOC.COM : Click to view the full PDF of ASME PVHO-1 2019

Figure 2-2.5.1-5 Short-Term Critical Pressure of Conical Frustum Acrylic Windows — Part 2

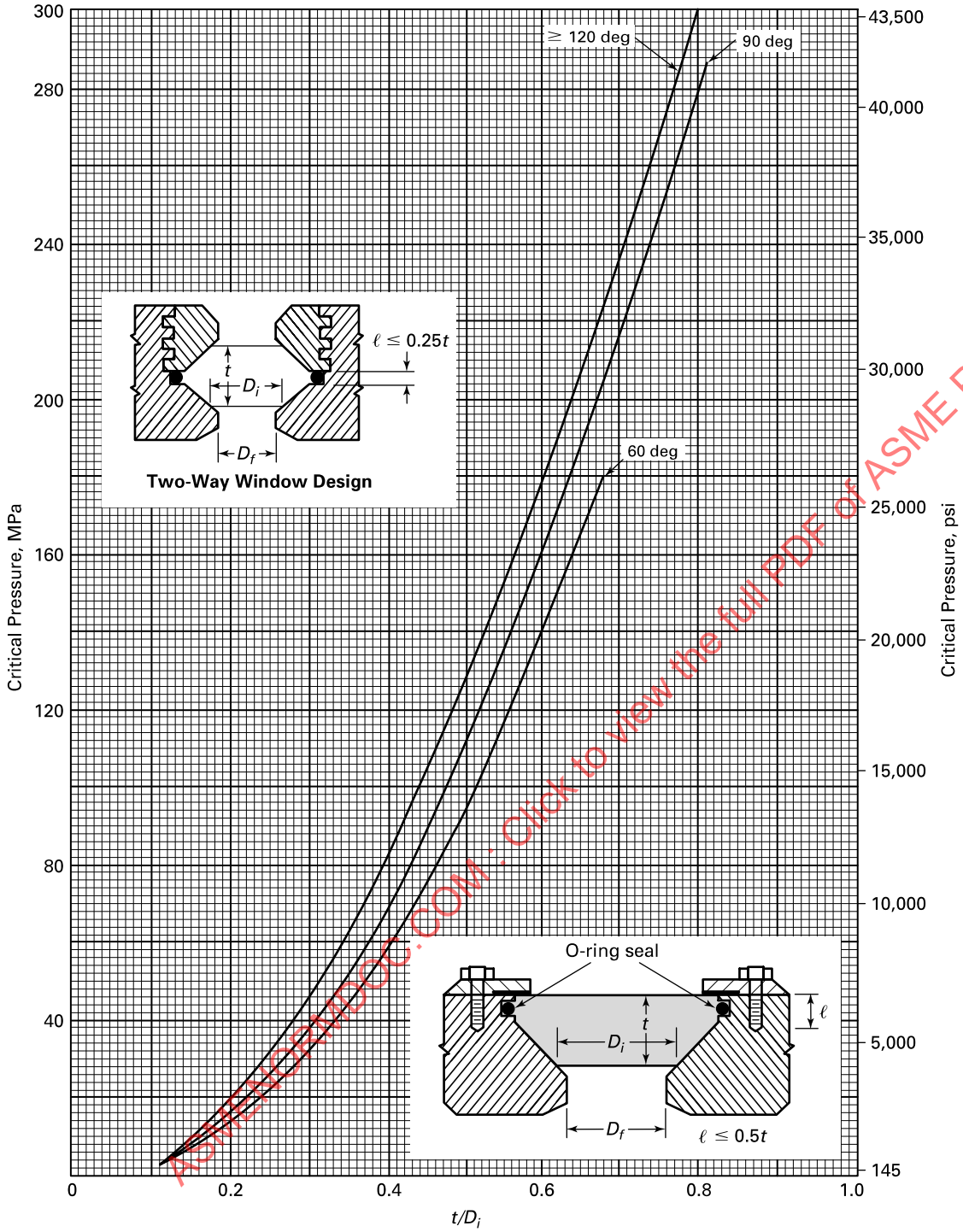

ASMENORMDOC.COM : Click to view the full PDF of ASME PVHO-1 2019

Figure 2-2.5.1-6 Short-Term Critical Pressure of Spherical Sector Acrylic Windows — Part 1

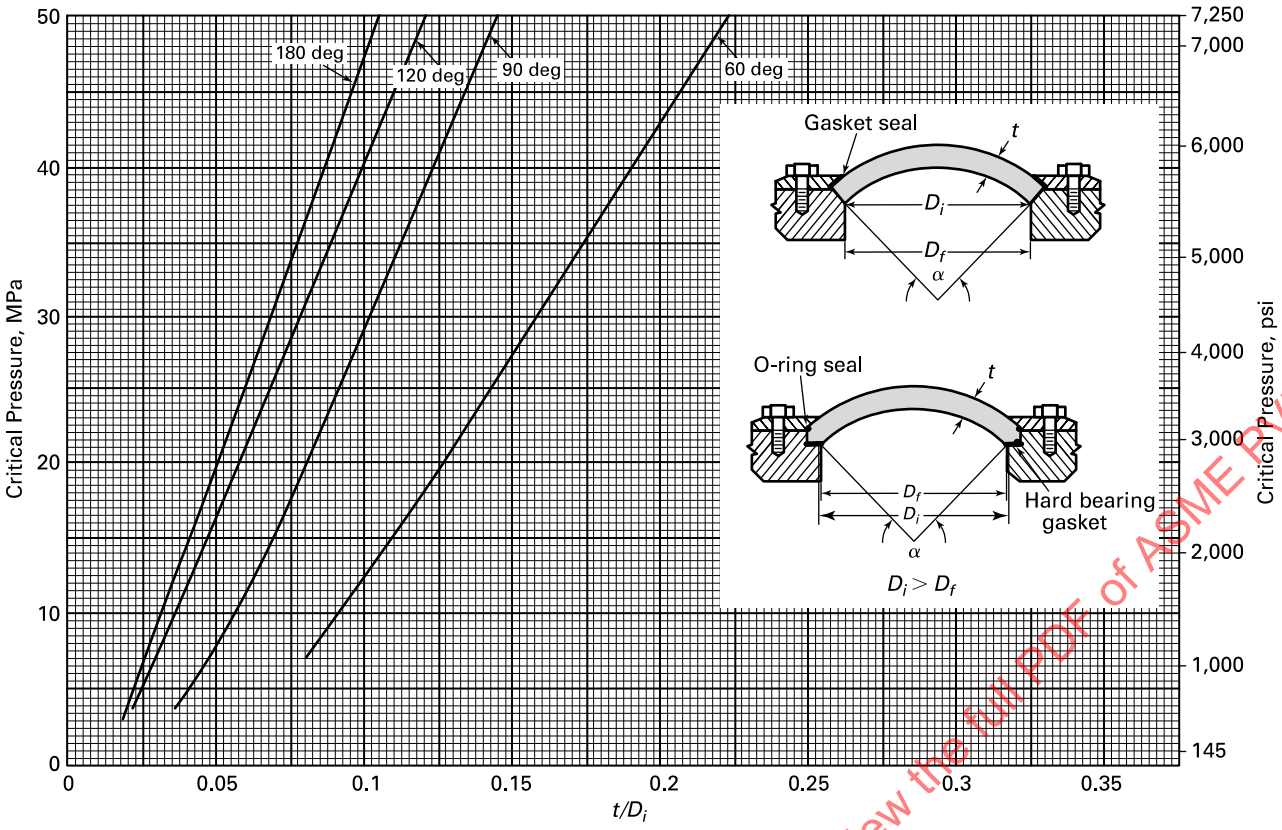

ASMENORMDOC.COM : Click to view the full PDF of ASME PVHO-1 2019

Figure 2-2.5.1-7 Short-Term Critical Pressure of Spherical Sector Acrylic Windows — Part 2

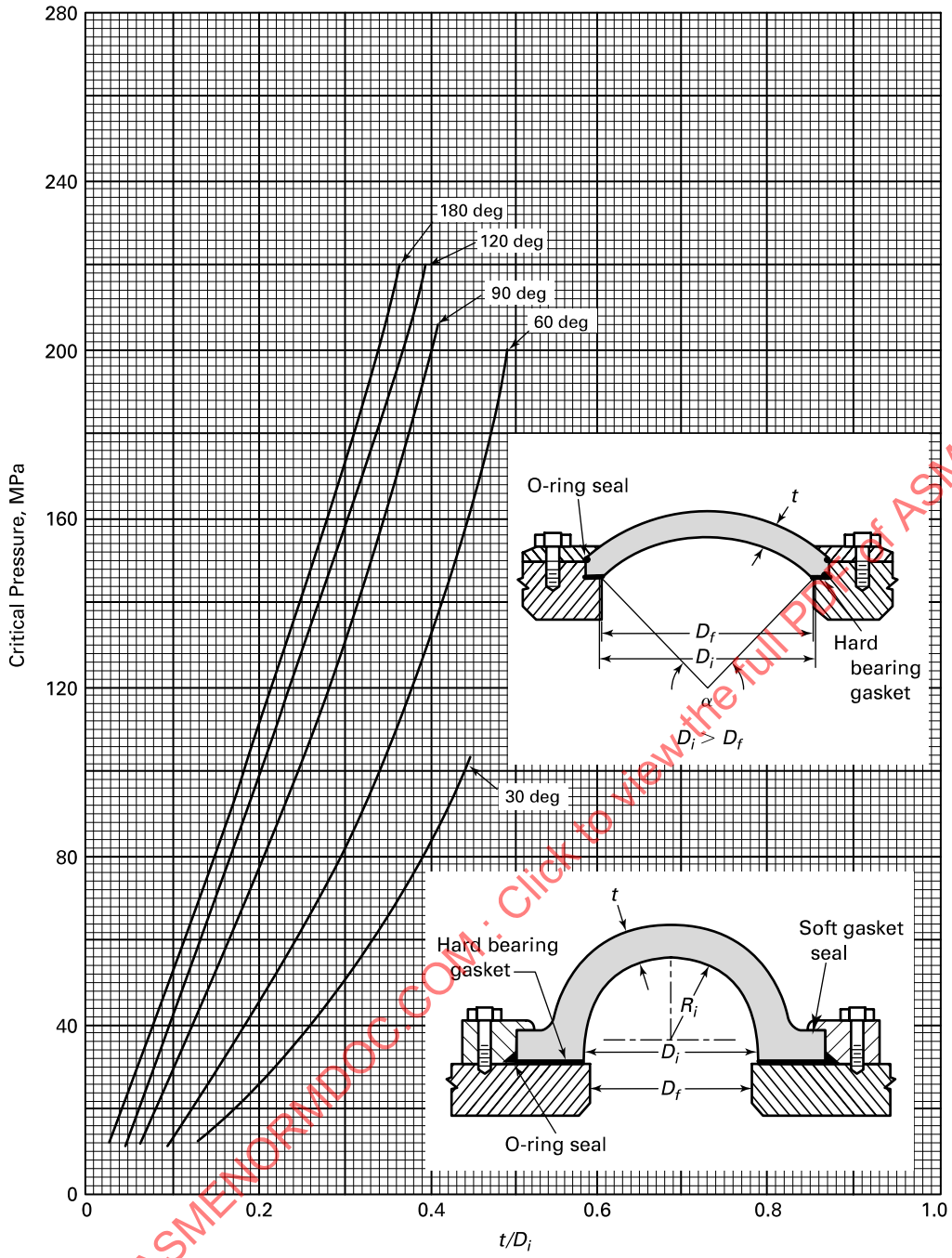

ASMENORMDOC.COM : Click to view the full PDF of ASME PVHO-1 2019

Figure 2-2.5.1-8 Short-Term Critical Pressure of Cylindrical Acrylic Windows Pressurized Internally — Part 1

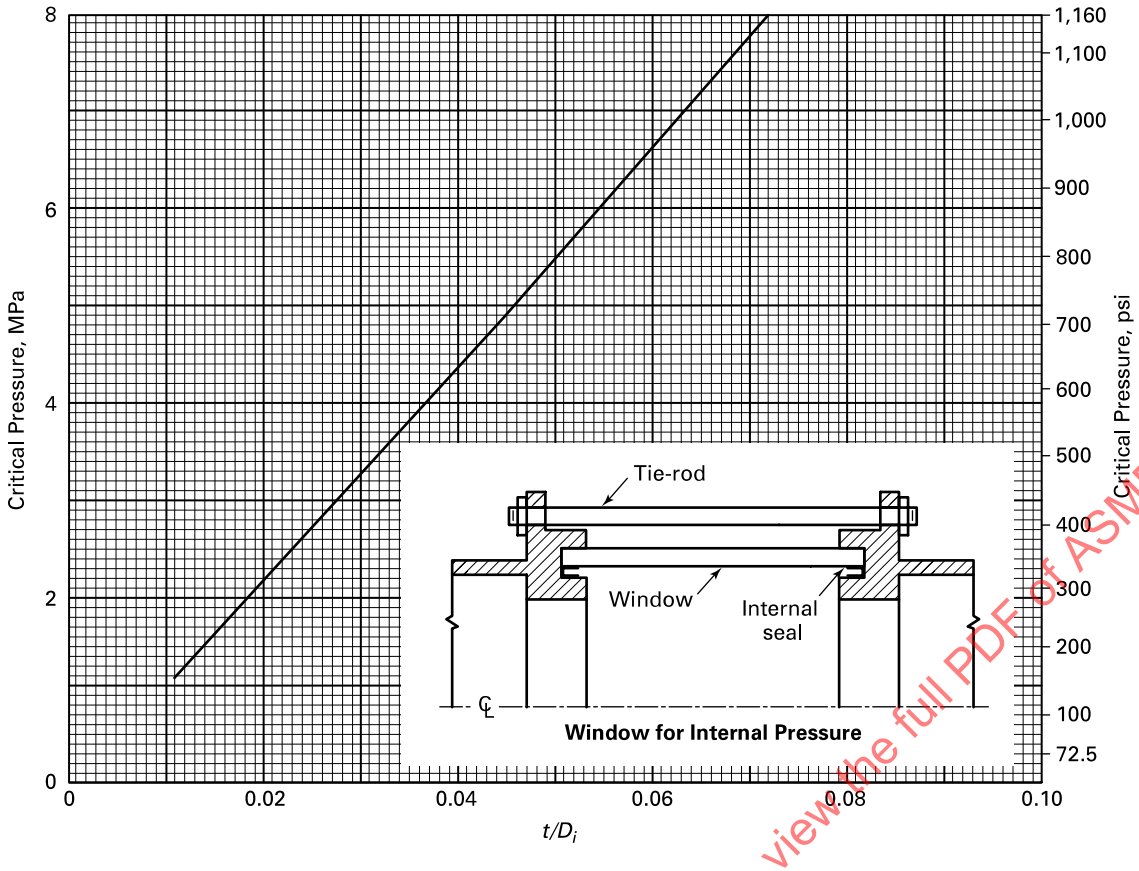

ASMENORMDOC.COM : Click to view the full PDF of ASME PVHO-1 2019

Figure 2-2.5.1-9 Short-Term Critical Pressure of Cylindrical Acrylic Windows Pressurized Internally — Part 2

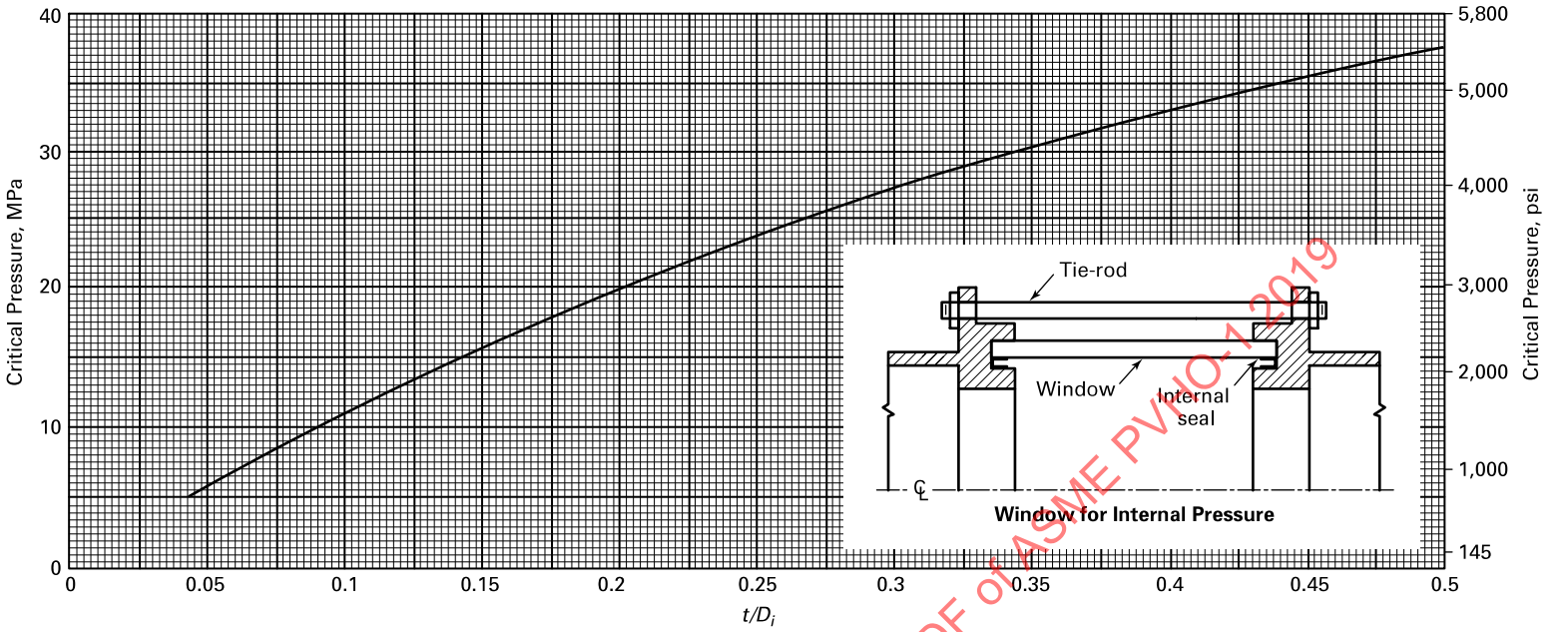

ASMENORMDOC.COM : Click to view the full PDF of ASME PVHO-1 2019

Figure 2-2.5.1-10 Short-Term Critical Pressure of Cylindrical Acrylic Windows Pressurized Externally

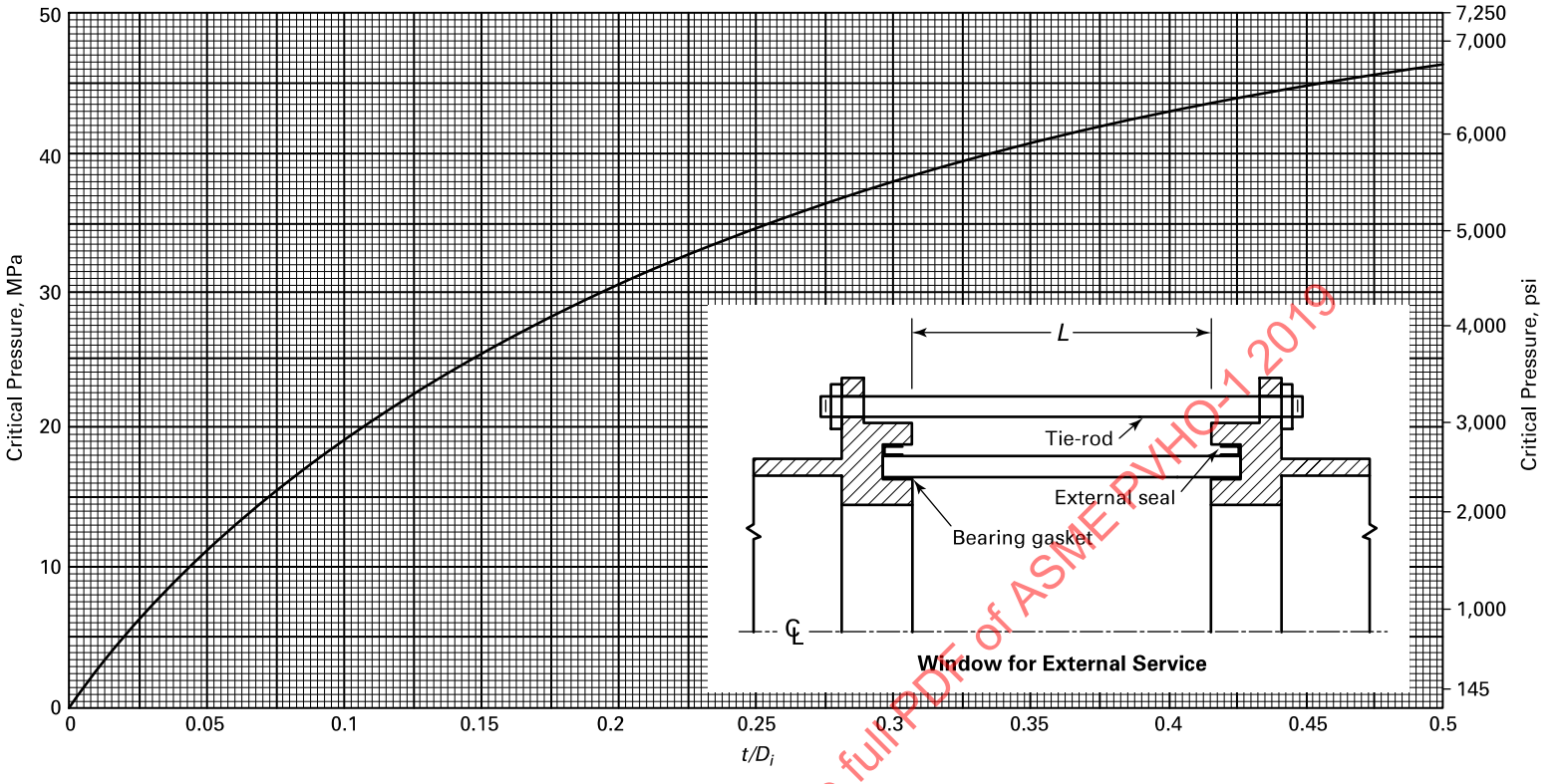

ASMENORMDOC.COM : Click to view the full PDF of ASME PVHO-1 2019

Figure 2-2.5.1-11 Short-Term Elastic Buckling of Cylindrical Acrylic Windows Between Supports Under External Hydrostatic Pressure — Part 1

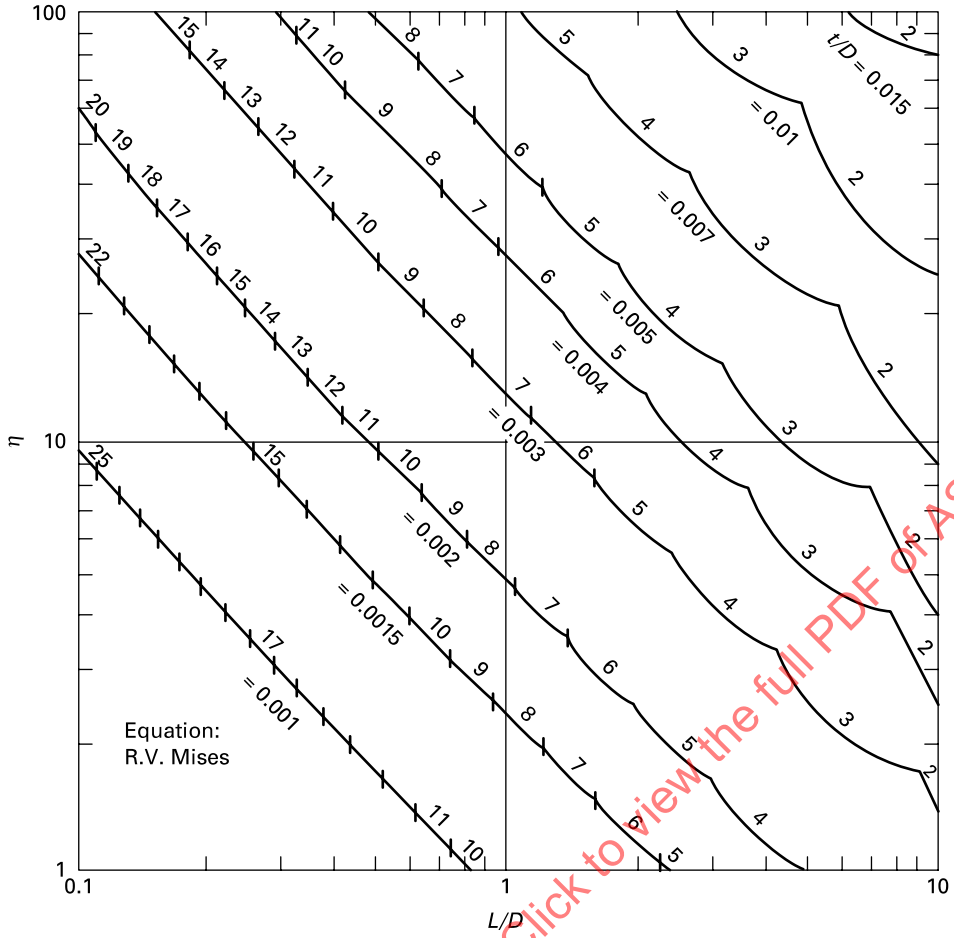

$D = \frac{D_i + D_o}{2}$

P_c = short-term critical pressure
= $\eta \times 3.499 \times 10^{-2}$ (psi)
= $\eta \times 2.413 \times 10^{-4}$ (MPa)

ASMENORMDOC.COM : Click to view the full PDF of ASME PVHO-1 2019

Figure 2-2.5.1-12 Short-Term Elastic Buckling of Cylindrical Acrylic Windows Between Supports Under External Hydrostatic Pressure — Part 2

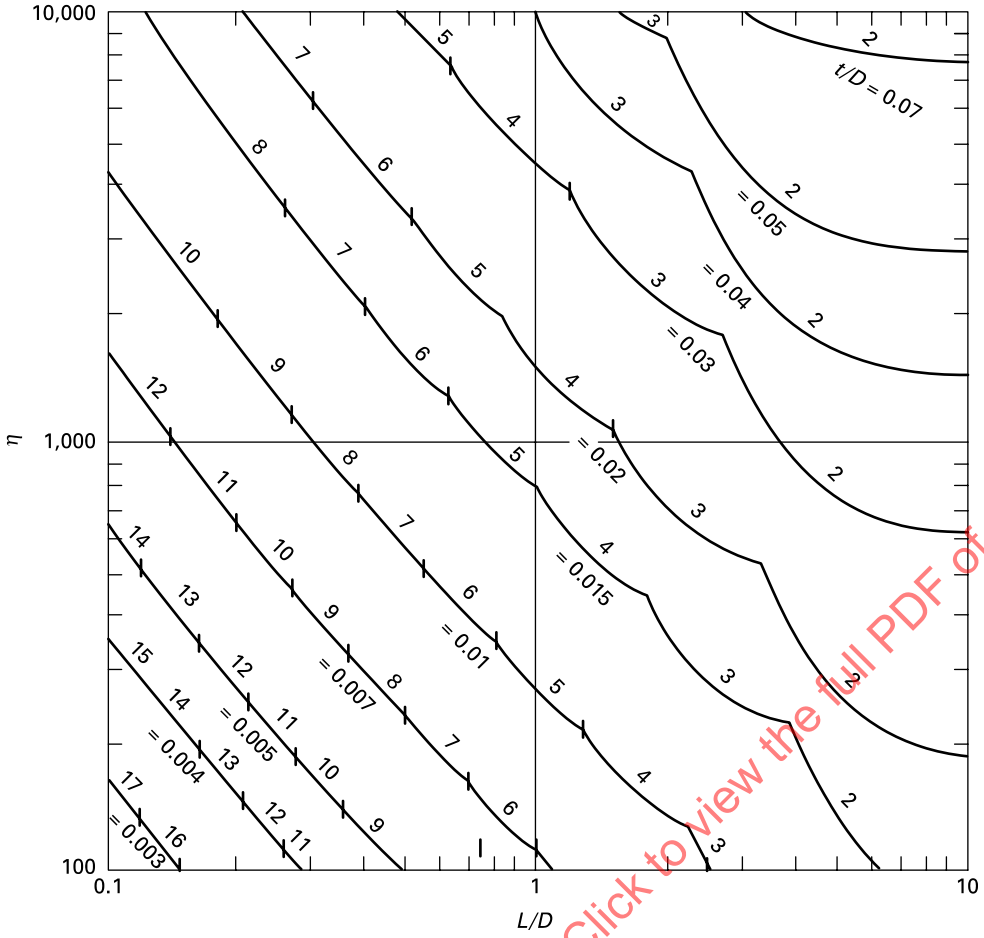

$D = \frac{D_i + D_o}{2}$

P_c = short-term critical pressure
= $\eta \times 3.499 \times 10^{-2}$ (psi)
= $\eta \times 2.413 \times 10^{-4}$ (MPa)

ASMENORMDOC.COM : Click to view the full PDF of ASME PVHO-1 2019

Figure 2-2.5.1-13 Short-Term Elastic Buckling of Cylindrical Acrylic Windows Between Supports Under External Hydrostatic Pressure — Part 3

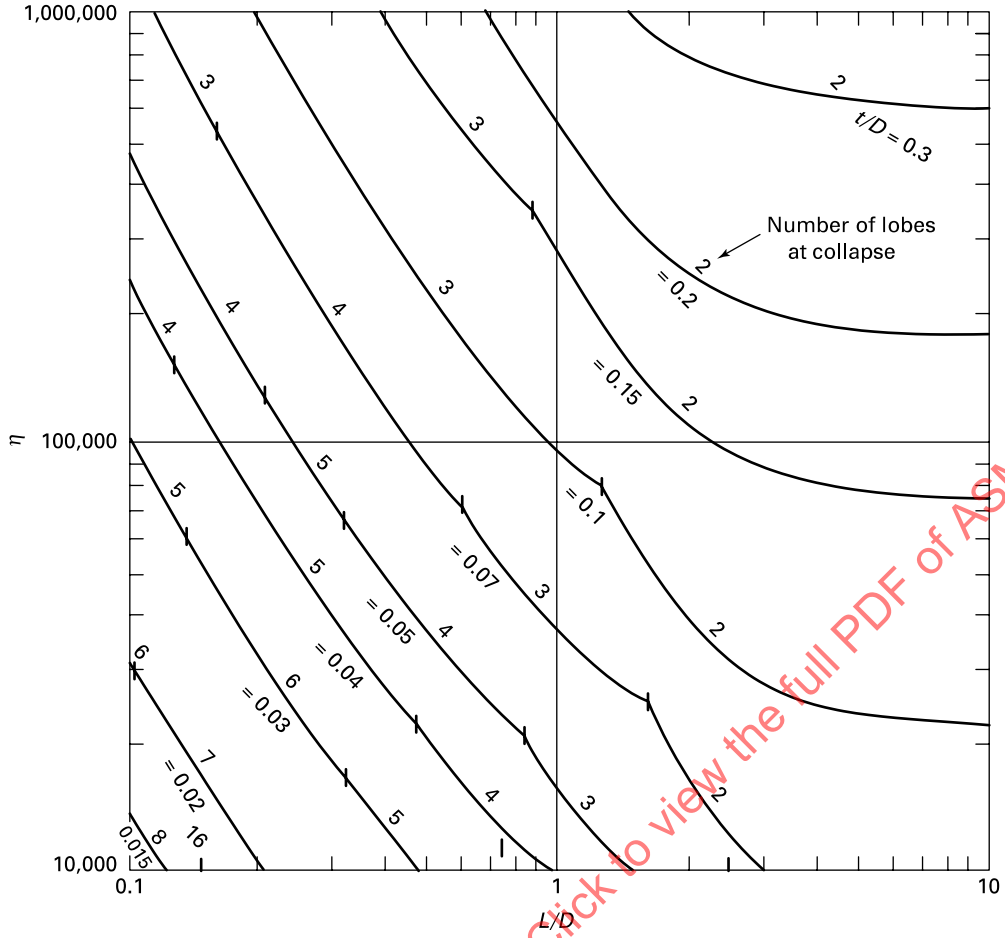

$D = \frac{D_i + D_o}{2}$

P_c = short-term critical pressure
= $\eta \times 3.499 \times 10^{-2}$ (psi)
= $\eta \times 2.413 \times 10^{-4}$ (MPa)

ASMENORMDOC.COM : Click to view the full PDF of ASME PVHO-1 2019

Figure 2-2.5.1-14 Short-Term Critical Pressure of Hyperhemispherical and NEMO-Type Acrylic Windows — Part 1

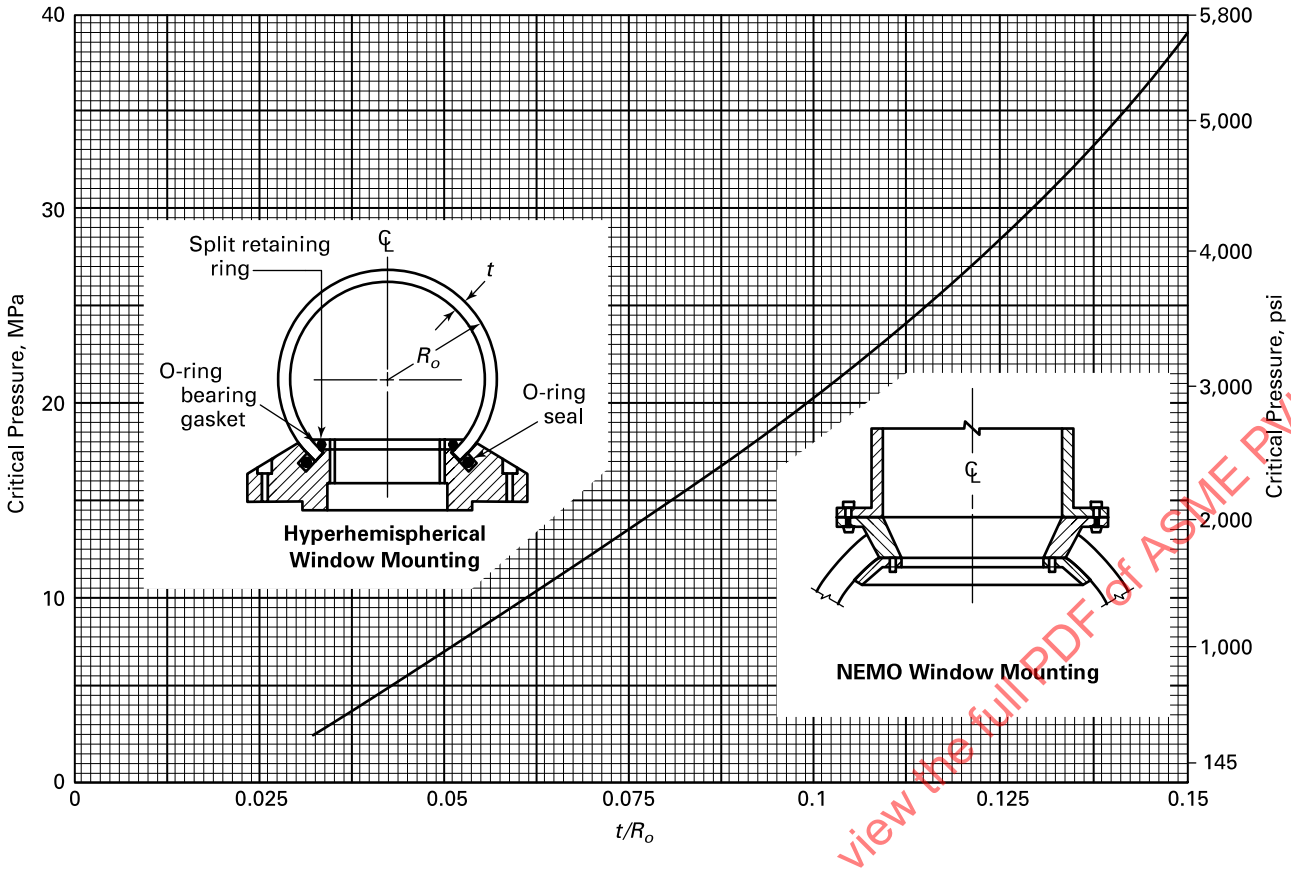

ASMENORMDOC.COM : Click to view the full PDF of ASME PVHO-1 2019

Figure 2-2.5.1-15 Short-Term Critical Pressure of Hyperhemispherical and NEMO-Type Acrylic Windows — Part 2

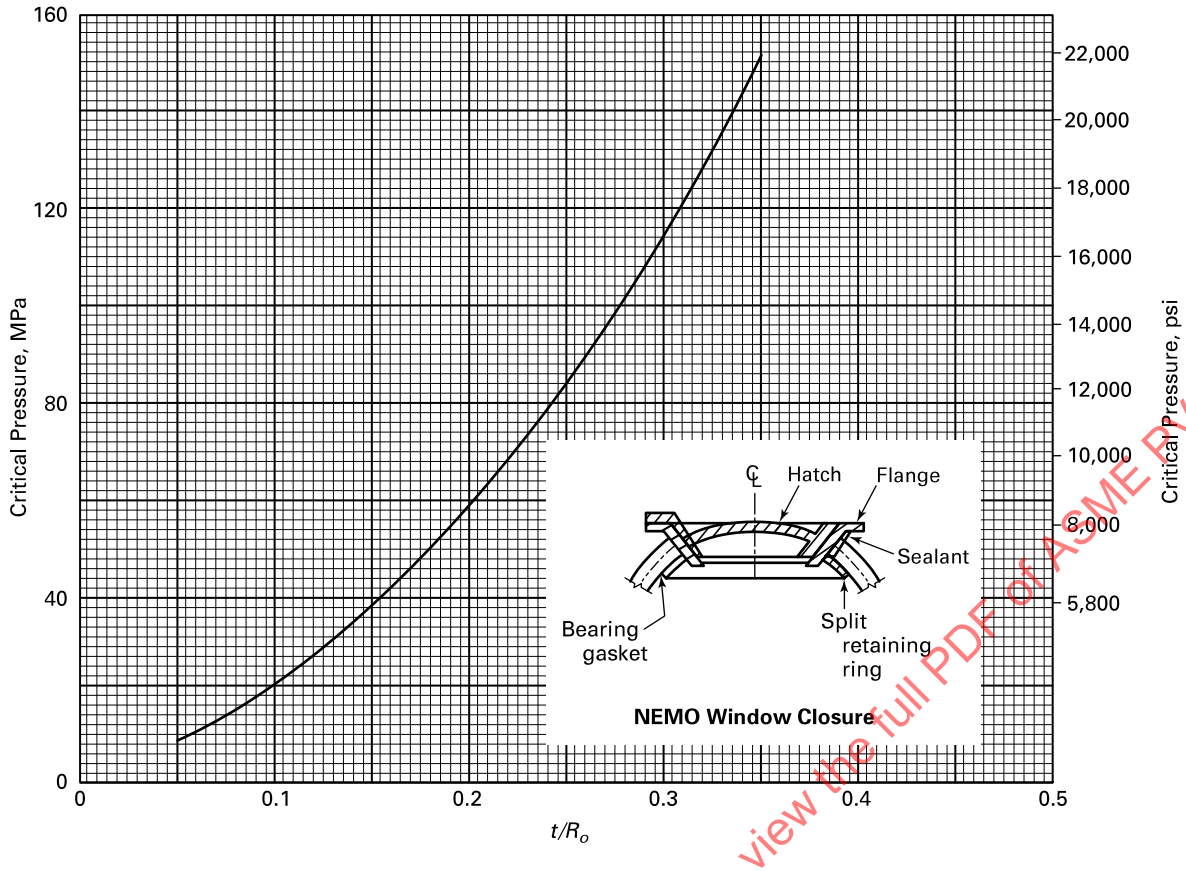

ASMENORMDOC.COM : Click to view the full PDF of ASME PVHO-1 2019

Figure 2-2.10.1-1 Seat Cavity Requirements — Conical Frustum Window, Spherical Sector Window With Conical Edge, and Flat Disk Window

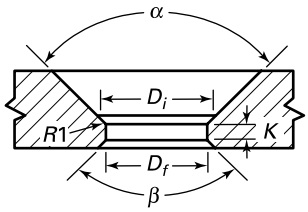

D_i/D_f Ratios

Operational Pressure Range	Included Angle, deg			
	60	90	120	150
$N = 1$	1.02	1.03	1.06	1.14
$N = 2$	1.04	1.06	1.12	1.28
$N = 3$	1.08	1.09	1.17	1.36
$N = 4$	1.10	1.20	1.20	1.42

(a) Conical Frustum Window

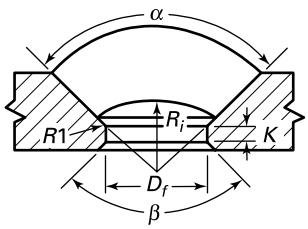

$[2R_i \sin(\alpha/2)]/D_f$ Ratios
(Spherical Sector With Conical Edge)

Operational Pressure Range	Included Angle, deg
	30–180
$N = 1$	1.02
$N = 2$	1.03
$N = 3$	1.05

(b) Spherical Sector Window With Conical Edge

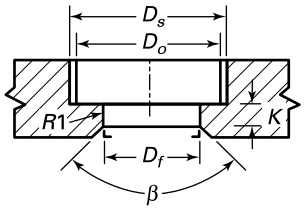

$1.250 \leq D_o/D_f$

(c) Flat Disk Window

GENERAL NOTES:
(a) For α between values shown, interpolation is required.
(b) $\frac{1}{32}$ in. (1.0 mm) ≤ $R1$ ≤ $\frac{1}{16}$ in. (2.0 mm).
(c) K is selected on the basis of structural analysis.
(d) β is selected on the basis of optical requirements.

ASMENORMDOC.COM : Click to view the full PDF of ASME PVHO-1 2019

Figure 2-2.10.1-2 Seat Cavity Requirements — Double-Beveled Disk Window

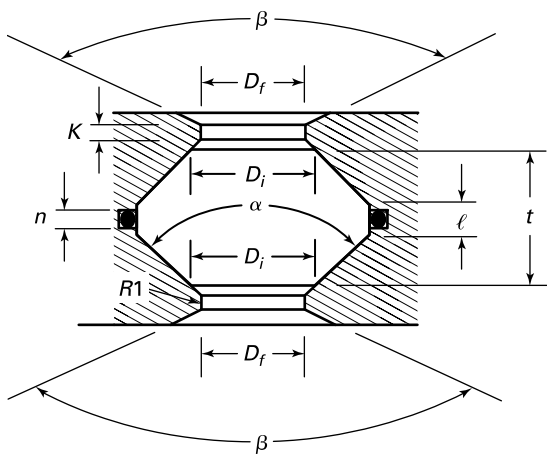

Operational Pressure Range	Included Angle, deg			
	60	90	120	150
N = 1	1.02	1.03	1.06	1.14
N = 2	1.04	1.06	1.12	1.28
N = 3	1.08	1.09	1.17	1.36
N = 4	1.10	1.15	1.20	1.42

GENERAL NOTES:
(a) For α between values shown, interpolation is required.
(b) K is selected on the basis of structural analysis.
(c) β is selected on the basis of optical requirements.
(d) $\ell \leq 0.25t$.
(e) $n \leq \ell$.
(f) $^1/_{32}$ in. (1.0 mm) ≤ $R1$ ≤ $^1/_{16}$ in. (2.0 mm).

ASMENORMDOC.COM : Click to view the full PDF of ASME PVHO-1 2019

Figure 2-2.10.1-3 Seat Cavity Requirements — Spherical Sector Window With Square Edge

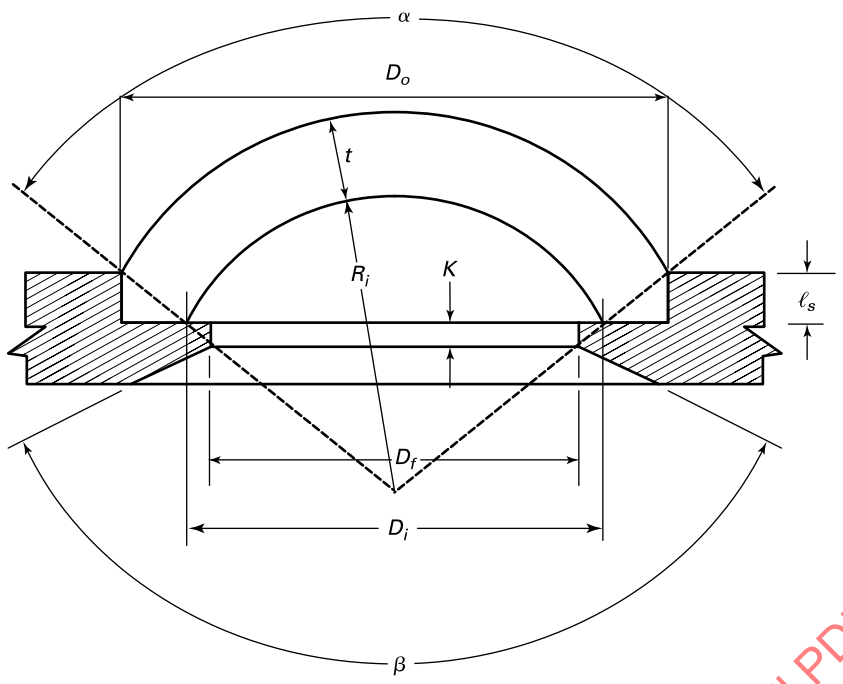

GENERAL NOTES:
(a) K is selected on the basis of structural analysis.
(b) β is selected on the basis of optical requirements.
(c) $D_o = 2\ R_o \sin \alpha/2$.
(d) $D_i = 2\ R_i \sin \alpha/2$.
(e) $D_i - D_f \geq \frac{1}{8}$ in. (3.0 mm).
(f) $\ell_s \geq t \sin (90 \text{ deg} - \alpha/2)$.
(g) $R_o = R_i + t$.

ASMENORMDOC.COM : Click to view the full PDF of ASME PVHO-1 2019

Figure 2-2.10.1-4 Seat Cavity Requirements — Hemispherical Window With Equatorial Flange

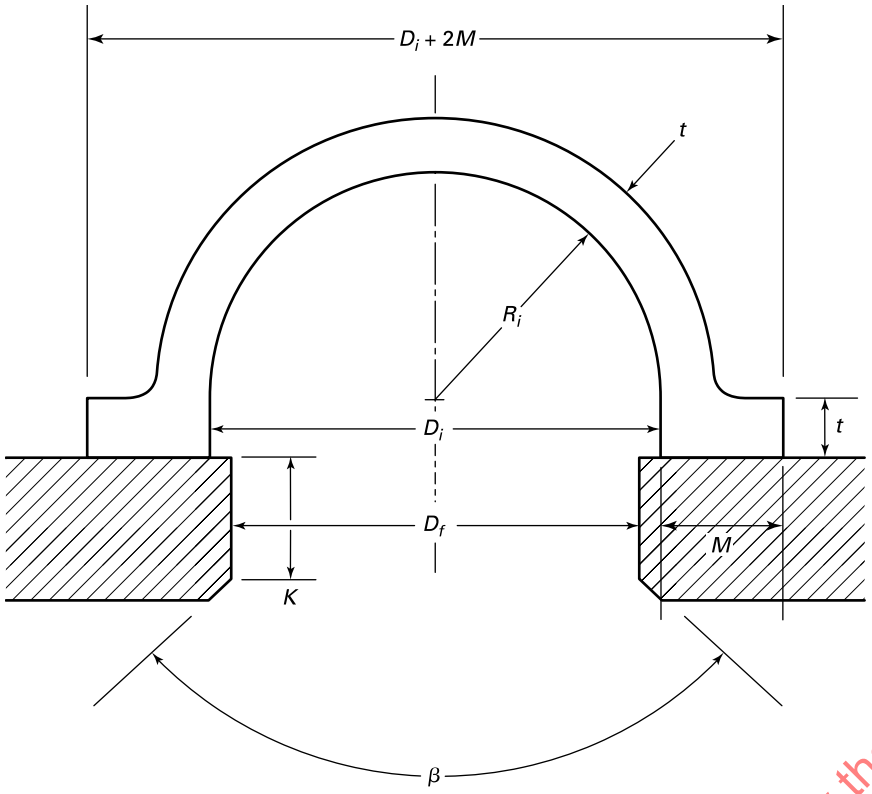

$1.5t \leq M \leq 2.0t$	
Operational Pressure Range	D_i/D_f
$N = 1$	1.02
$N = 2$	1.03
$N = 3$	1.05

GENERAL NOTES:
(a) K is selected on the basis of structural analysis.
(b) β is selected on the basis of optical requirements.

ASMENORMDOC.COM : Click to view the full PDF of ASME PVHO-1 2019

Figure 2-2.10.1-5 Seat Cavity Requirements — Cylindrical Window

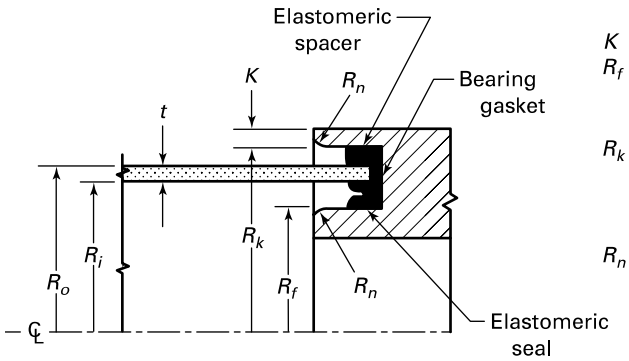

(a) Under Internal Pressure

K is selected on the basis of structural analysis
R_f = internal radius of window seat
≤ calculated R_i of cylinder at zero internal pressure and –30°C minus gasket compressed 50%
R_k = external radius of window seat
≥ calculated maximum R_o of cylinder under sustained internal design pressure of 8 hr duration at design temperature plus gasket compressed 50%
R_n ≥ $^1/_{32}$ in. (1.0 mm)

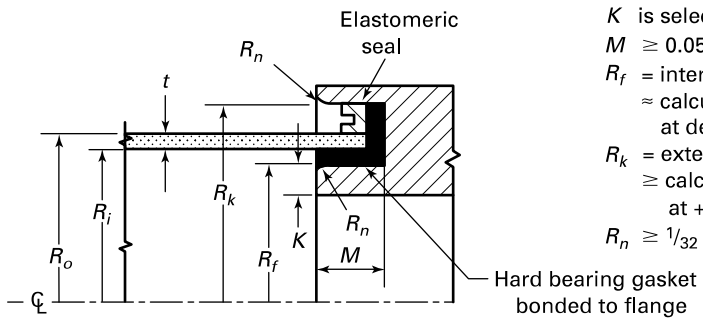

(b) Under External Pressure

K is selected on the basis of structural analysis
M ≥ $0.05R_i$
R_f = internal radius of window seat
≈ calculated R_i of cylinder under zero external pressure at design temperature minus thickness of gasket
R_k = external radius of window seat
≥ calculated R_o of cylinder under zero external pressure at +52°C plus gasket compressed 50%
R_n ≥ $^1/_{32}$ in. (1.0 mm)

ASMENORMDOC.COM : Click to view the full PDF of ASME PVHO-1 2019

Figure 2-2.10.1-6 Seat Cavity Requirements — Hyperhemispherical Window

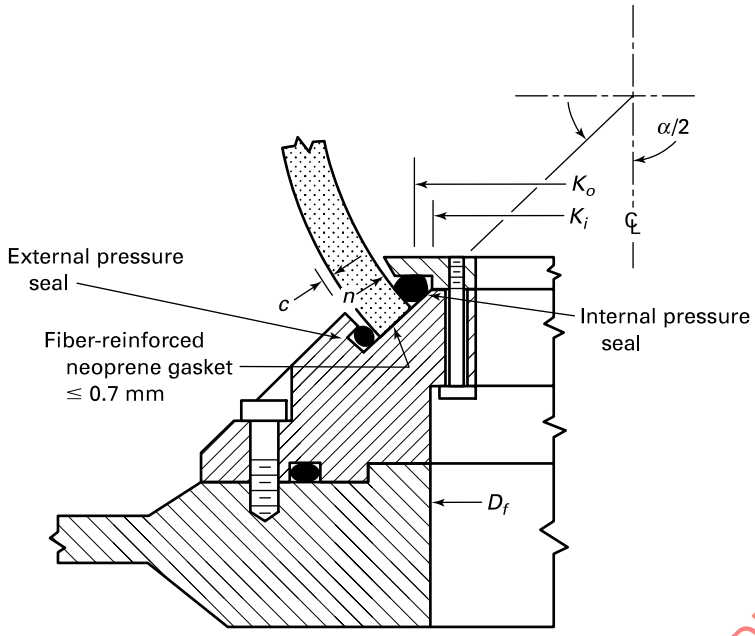

$$K_o - K_i \geq {}^1/_4 \text{ in. (6.0 mm)}$$
$$n \geq {}^1/_{32} \text{ in. (1.0 mm)}$$
$$c \geq {}^1/_{16} \text{ in. (2.0 mm)}$$
$$\alpha \leq 100 \text{ deg}$$

D_f = diameter of the opening in the pressure hull
K_i = inner diameter of the conical seat
K_o = inner diameter of the penetration in the window
α = included spherical angle of the opening

ASMENORMDOC.COM : Click to view the full PDF of ASME PVHO-1 2019

Figure 2-2.10.1-7 Seat Cavity Requirements — NEMO Window (Standard Seat)

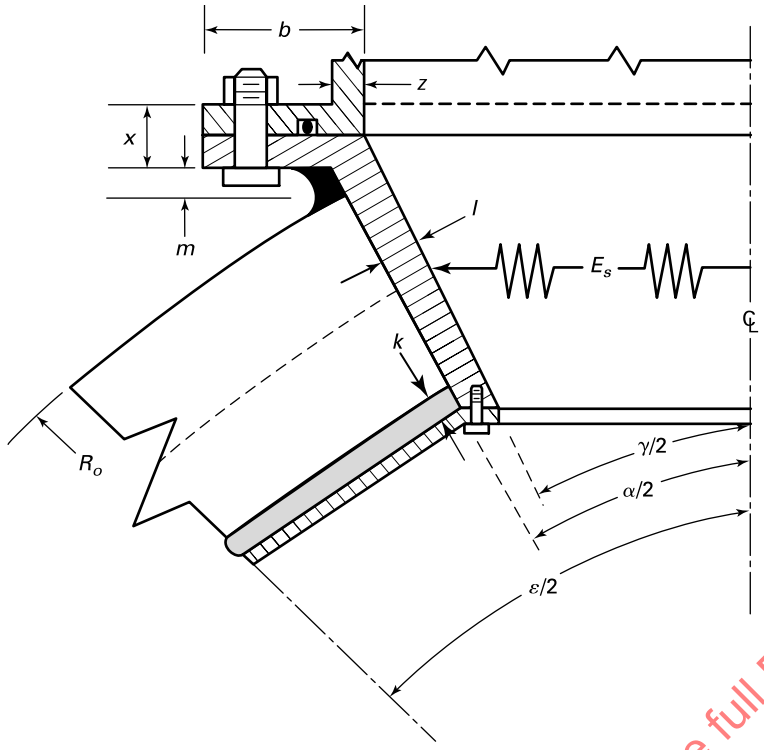

$$k \geq 0.005R_o$$
$$m \geq 0.01R_o$$
$$\alpha \leq 50 \text{ deg}$$
$$(\alpha + 8 \text{ deg}) \leq \varepsilon \leq (\alpha + 12 \text{ deg})$$

E_s = orientation of effective radial stiffness
k = thickness of compressed gasket
m = elevation of hatch ring
α = spherical angle of window penetration
ε = spherical angle of split retaining ring
γ = spherical angle of hatch seat

GENERAL NOTE: The variables *x*, *b*, *z*, and *l* shall be proportioned in such a manner that the effective radial stiffness of all inserts at the penetration does not exceed the radial stiffness of acrylic sector with included angle α by more than 3,500%.

ASMENORMDOC.COM : Click to view the full PDF of ASME PVHO-1 2019

Figure 2-2.10.1-8 Seat Cavity Requirements — NEMO Window (Seat With Extended Cyclic Fatigue Life)

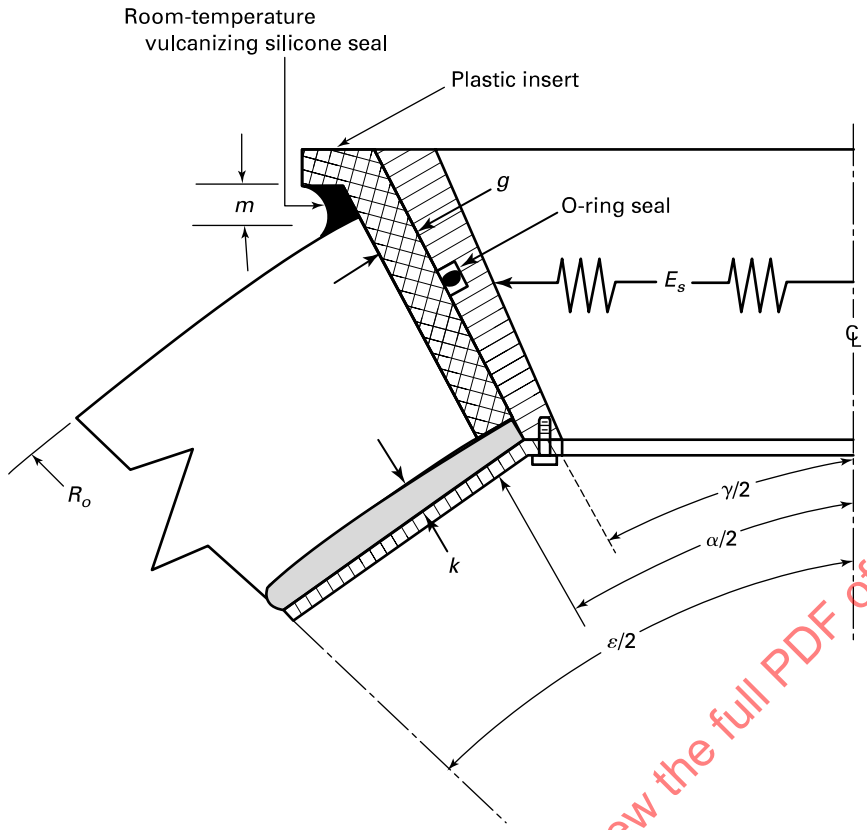

$$g \geq 0.03R_o$$
$$k \geq 0.005R_o$$
$$m \geq 0.01\,R_o$$
$$\alpha \leq 50\text{ deg}$$
$$(\alpha + 8\text{ deg}) \leq \varepsilon \leq (\alpha + 12\text{ deg})$$

E_s = orientation of effective radial stiffness
g = thickness of plastic insert
k = thickness of compressed gasket (neoprene)
m = elevation of hatch ring
α = spherical angle of window penetration
ε = spherical angle of split retaining ring
γ = spherical angle of hatch seat

GENERAL NOTE: The variables *x, b, z,* and *l* shall be proportioned in such a manner that the effective radial stiffness of all inserts at the penetration does not exceed the radial stiffness of acrylic sector with included angle α by more than 3,500%.

ASMENORMDOC.COM : Click to view the full PDF of ASME PVHO-1 2019

Figure 2-2.11.10-1 Bevels on Window Edges — FlaHmisp Windowshc oni, al FrusHuS Windowsht qxeri, al t e, Hbr WindowshPI qerxeS isqxeres

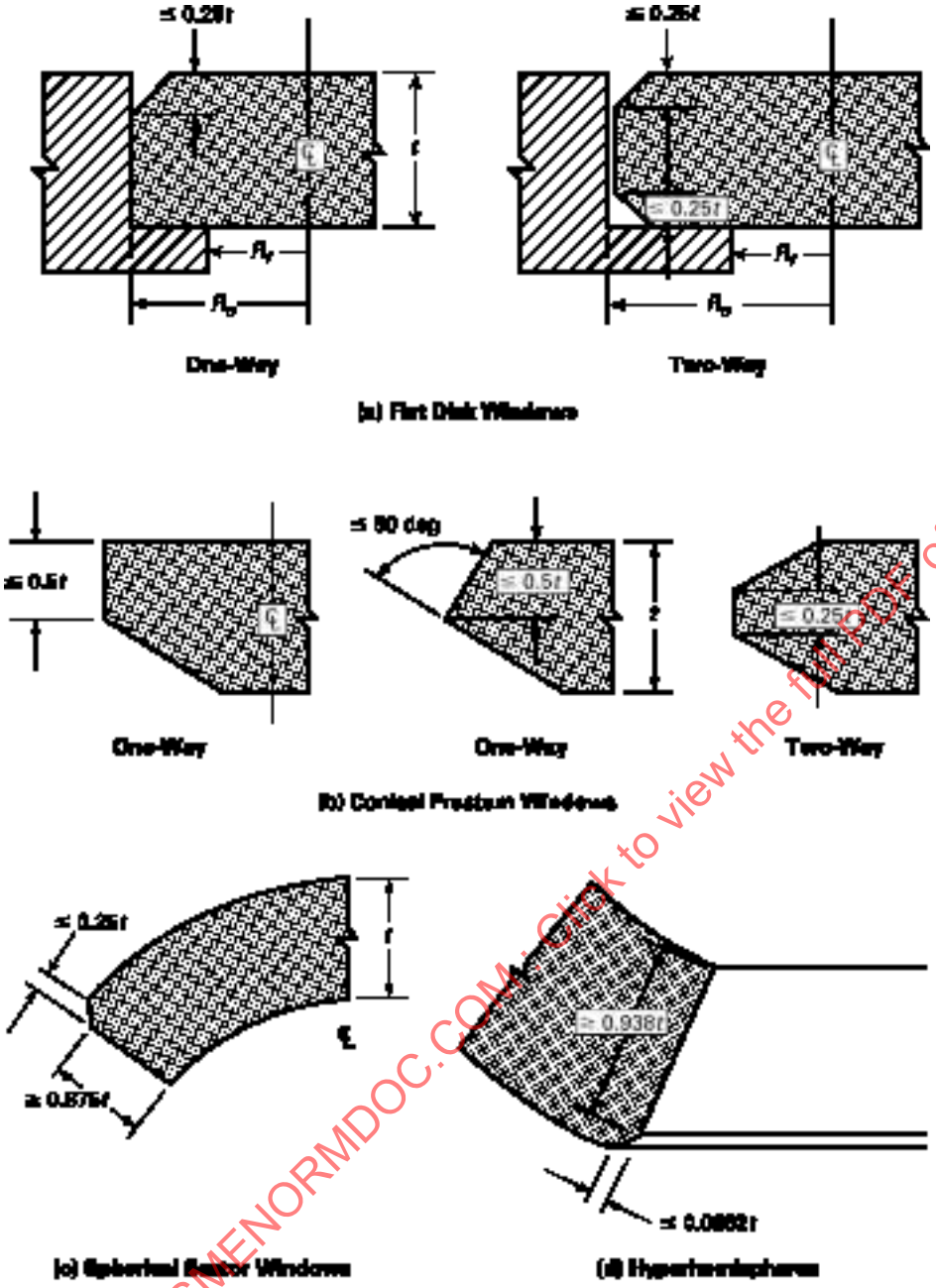

ASMENORMDOC.COM : Click to view the full PDF of ASME PVHO-1 2019

Figure 2-2.11.10-2 Bevels on Window Edges — Flanged Hemispherical Window, Spherical Sector Window With Square Edge, External Pressure and Internal Pressure of Cylindrical Windows

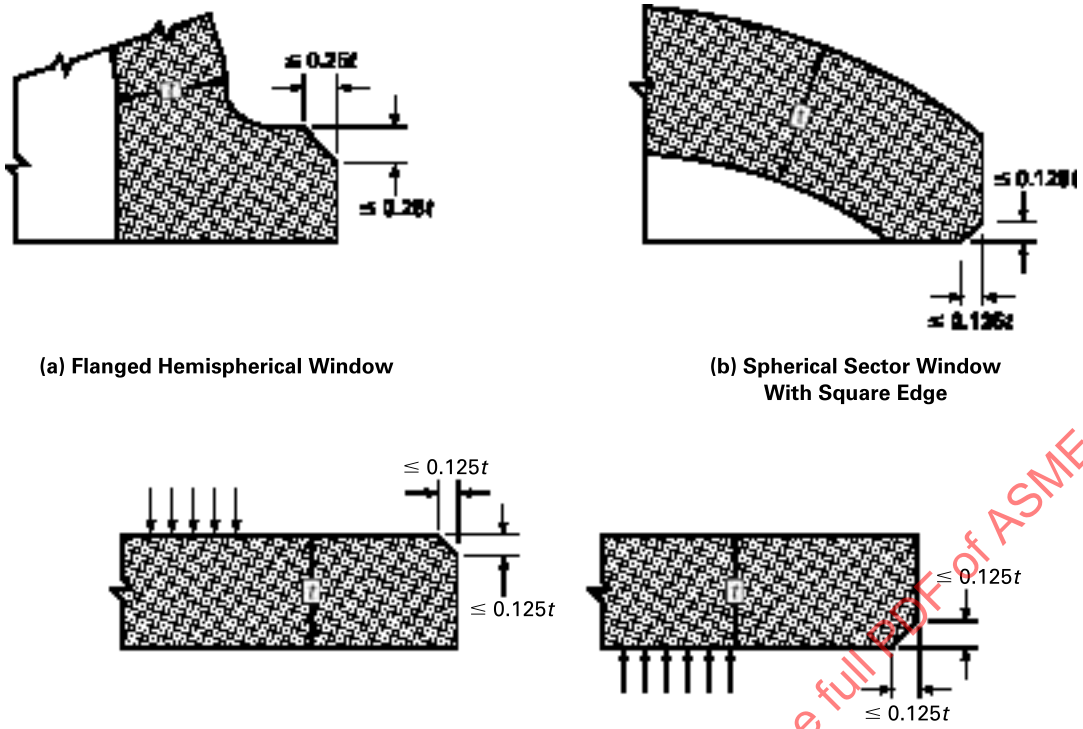

(a) Flanged Hemispherical Window

(b) Spherical Sector Window With Square Edge

External Pressure

Internal Pressure

(c) Cylindrical Windows

ASMENORMDOC.COM : Click to view the full PDF of ASME PVHO-1 2019

Figure 2-2.11.11-1 Acceptable Configurations for Clear Viewport Retaining Covers

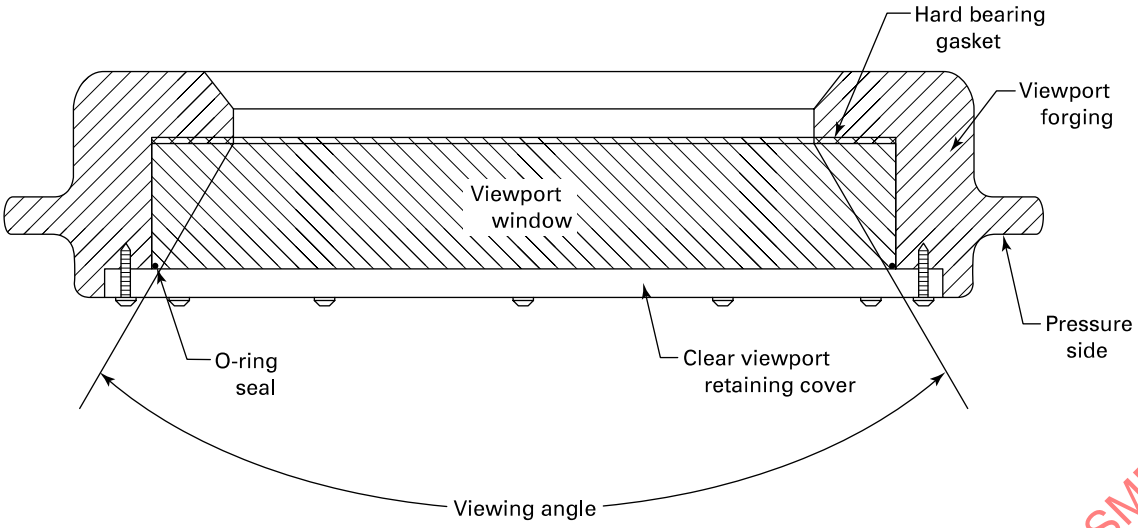

(a) Flat Disk Viewport Cross Section

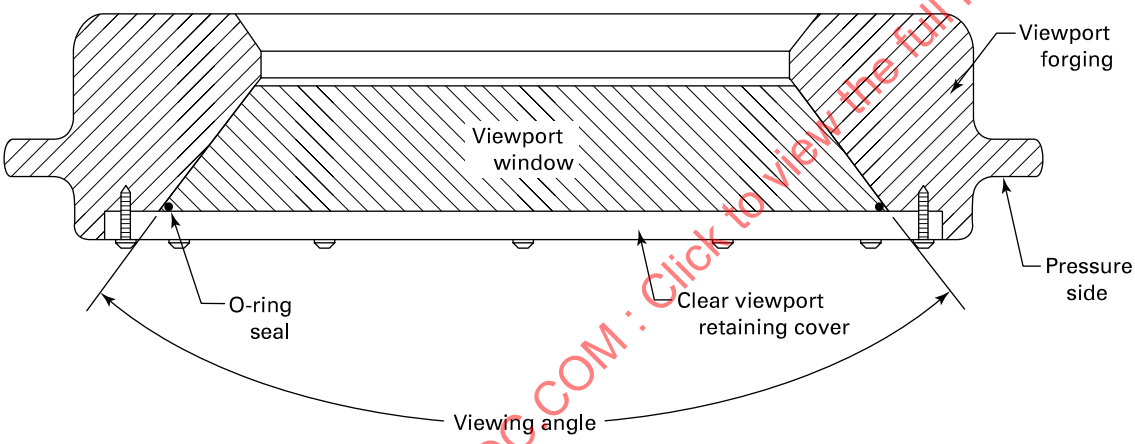

(b) Conical Frustum Viewport Cross Section

ASMENORMDOC.COM : Click to view the full PDF of ASME PVHO-1 2019

Figure 2-2.14.11-1 Dimensional Tolerances for Penetrations in Acrylic Windows

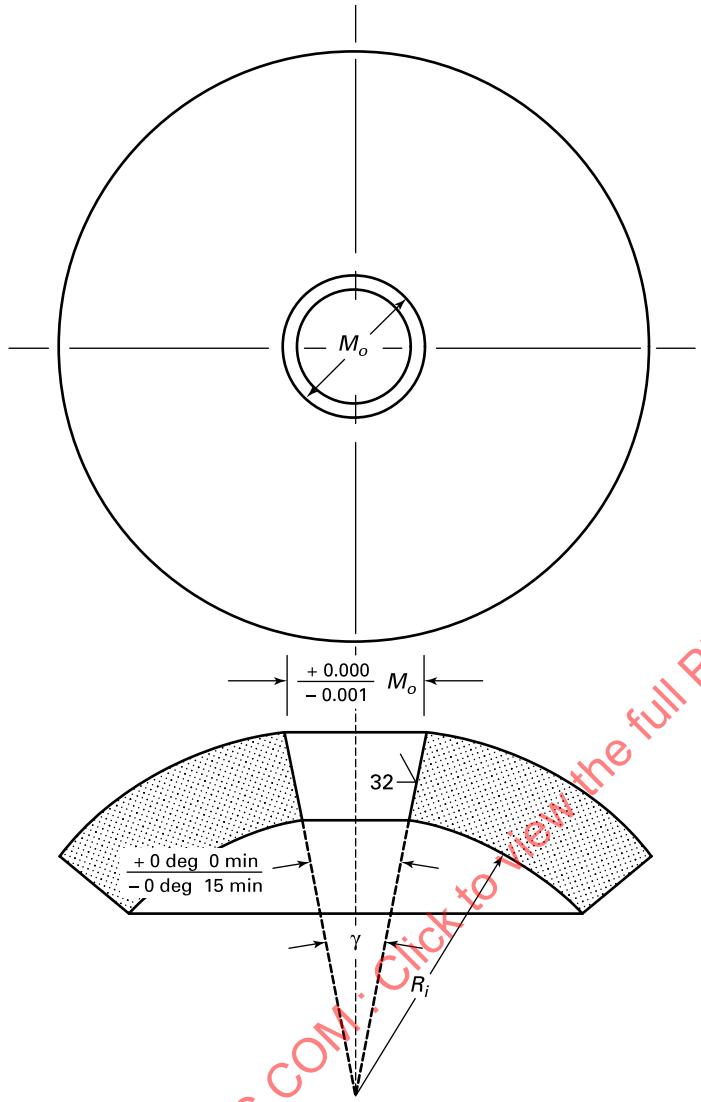

M_o = outside diameter of penetrations
R_i = radius of convex curvature
γ = conical seat angle

ASMENORMDOC.COM : Click to view the full PDF of ASME PVHO-1 2019

Table 2-2.14.13-1 Specified Values of Physical Properties for Polycarbonate Plastic

Test Procedures	Physical Property	Specified Values	
		U.S. Customary Units	SI Units
ASTM D638 [Note (1)]	Tensile:		
	(a) ultimate strength	≥9,000 psi	≥62 MPa
	(b) elongation at break	≥20.0%	≥20.0%
	(c) modulus of elasticity	≥300,000 psi	≥2 069 MPa
ASTM D695 [Note (1)]	Compressive:		
	(a) yield strength	≥12,000 psi	≥82.8 MPa
	(b) modulus of elasticity	≥300,000 psi	≥2 069 MPa
ASME PVHO-1 method, para. 2-3.7(c)	Compressive deformation at 4,000 psi (27.6 MPa) and 122°F (50°C) for 24 hr	≤2%	≤2%
ASTM D732 [Note (1)]	Shear, ultimate strength	≥9,000 psi	≥62 MPa
ASTM E308	Ultraviolet transmittance	≤5%	≤5%

GENERAL NOTE: Test coupons shall be taken from each plate that serves as machining stock for inserts and shall be tested to verify that the physical properties of the material meet the requirements in this Table.

NOTE: (1) These tests require testing a minimum of two specimens. For others, test a minimum of one specimen. Where applicable, use the sampling procedures described in para. 2-3.7. Where two specimens are required in the test procedure, the average of the test values shall be used to meet the requirements of the minimum physical properties of this Table.

Table 2-2.14.13-2 Specified Values of Physical Properties for Cast Nylon Plastic

Test Procedures	Physical Property	Specified Values	
		U.S. Customary Units	SI Units
ASTM D638 [Note (1)]	Tensile:		
	(a) ultimate strength	≥9,500 psi	≥65.5 MPa
	(b) elongation at break	≥30.0%	≥30.0%
	(c) modulus of elasticity	≥350,000 psi	≥2 415.0 MPa
ASTM D695 [Note (1)]	Compressive:		
	(a) yield strength	≥6,000 psi	≥41.4 MPa
	(b) modulus of elasticity	≥250,000 psi	≥1 725.0 MPa
ASME PVHO-1 method, para. 2-3.7(c)	Compressive deformation at 4,000 psi (27.6 MPa) and 122°F (50°C) for 24 hr	<1.4%	<1.4%
ASTM D732 [Note (1)]	Shear, ultimate strength	≥4,300 psi	≥29.7 MPa

GENERAL NOTE: Test coupons shall be taken from each casting that serves as machining stock for inserts and shall be tested to verify that the physical properties of the material meet the requirements in this Table.

NOTE: (1) These tests require testing a minimum of two specimens. Where applicable, use the sampling procedures described in para. 2-3.7. Where two specimens are required in the test procedure, the average of the test values shall be used to meet the requirements of the minimum physical properties of this Table.

ASMENORMDOC.COM : Click to view the full PDF of ASME PVHO-1 2019

Figure 2-2.14.15-1 Dimensional Tolerances for Inserts in Acrylic Windows

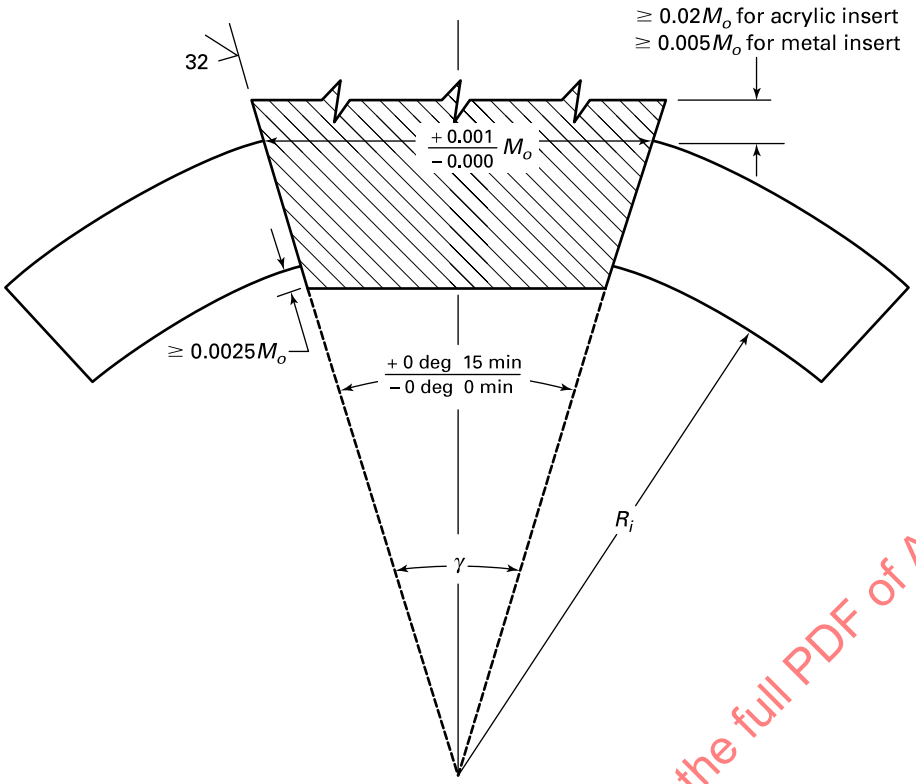

ASMENORMDOC.COM : Click to view the full PDF of ASME PVHO-1 2019

Figure 2-2.14.16-1 Typical Shapes of Inserts

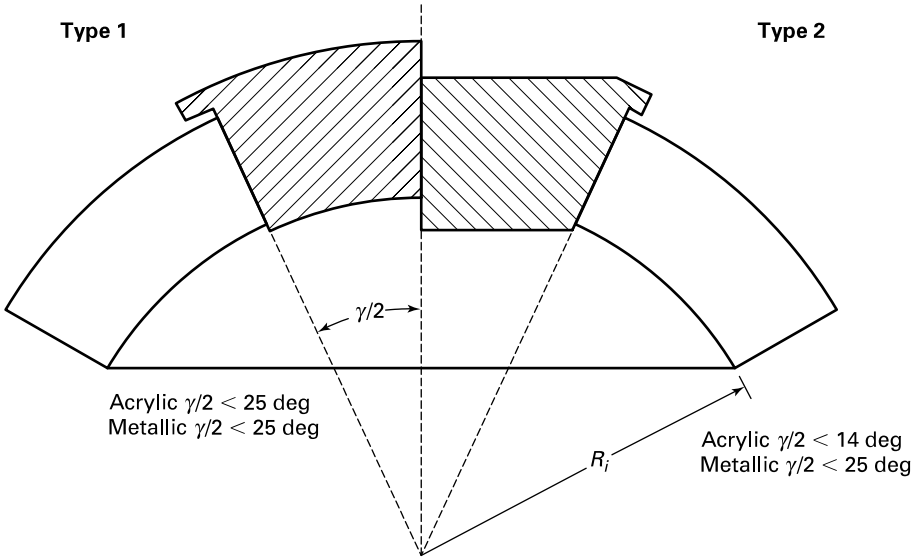

(a) For Metallic and Acrylic Materials

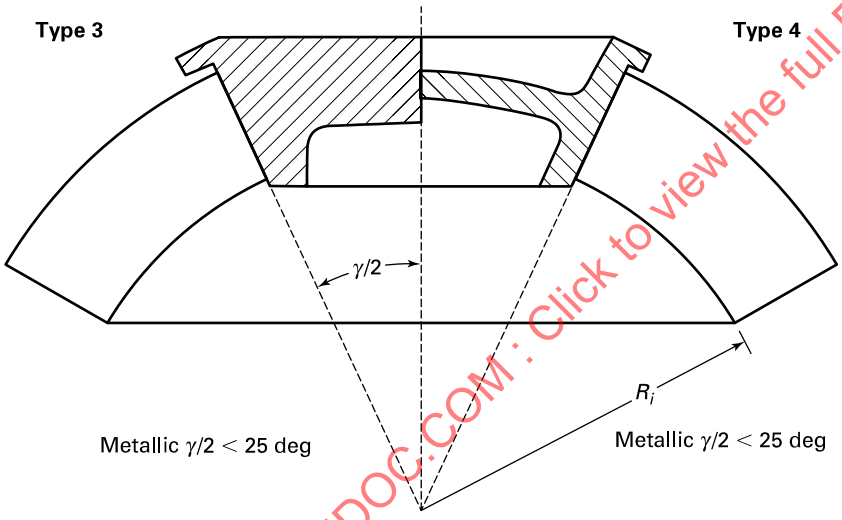

(b) For Metallic Materials

ASMENORMDOC.COM : Click to view the full PDF of ASME PVHO-1 2019

Figure 2-2.14.22-1 Seal Configurations for Inserts in Acrylic Windows

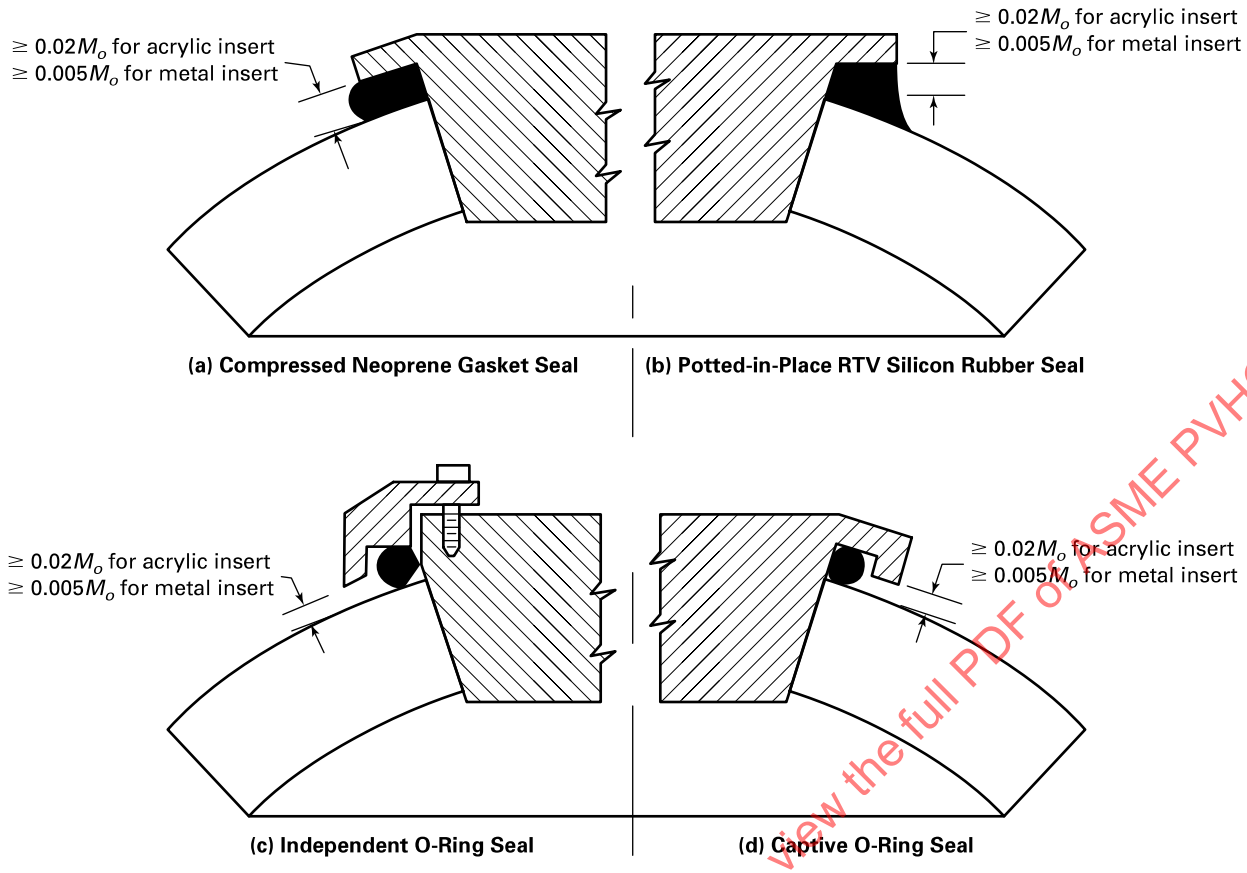

ASMENORMDOC.COM : Click to view the full PDF of ASME PVHO-1 2019

Figure 2-2.14.24-1 Restraints for Inserts in Acrylic Windows

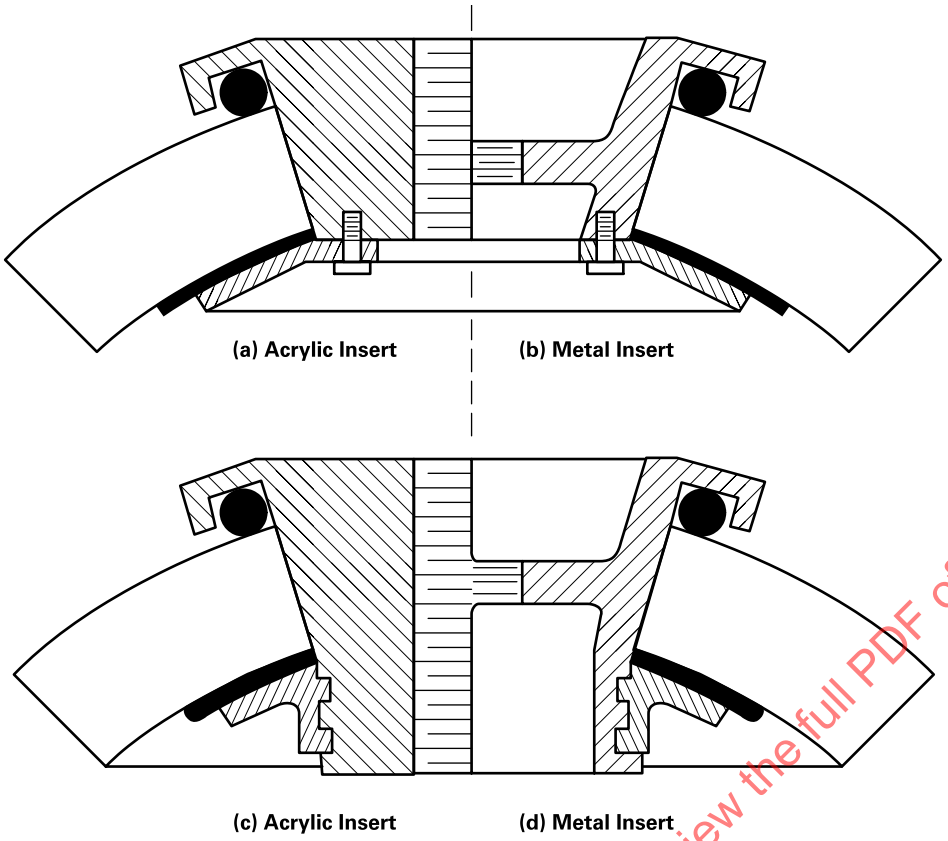

ASMENORMDOC.COM : Click to view the full PDF of ASME PVHO-1 2019

Table 2-3.4-1 Specified Values of Physical Properties for Each Lot

Test Procedures	Physical Property	Specified Values	
		U.S. Customary Units	SI Units
ASTM D256 [Note (1)]	Izod notched impact strength	≥0.25 ft-lb/in.-min	≥13.3 J/m
ASTM D542	Refractive index	1.49 + 0.01	1.49 + 0.01
ASTM D570 [Note (1)]	Water absorption, 24 hr	≤0.25%	≤0.25%
ASME PVHO-1 method, para. 2-3.7(c)	Compressive deformation at 4,000 psi (27.6 MPa), 122°F (50°C), 24 hr	≤1.0%	≤1.0%
ASTM D638 [Note (1)]	Tensile:		
	(a) ultimate strength	≥9,000 psi	≥62 MPa
	(b) elongation at break	≥2%	≥2%
	(c) modulus	≥400,000 psi	≥2 760 MPa
ASTM D695 [Note (1)]	Compressive:		
	(a) yield strength	≥15,000 psi	≥103 MPa
	(b) modulus of elasticity	≥400,000 psi	≥2 760 MPa
ASTM D732 [Note (1)]	Shear, ultimate strength	≥8,000 psi	≥55 MPa
ASTM D785 [Note (1)]	Rockwell hardness	≥M scale 90	≥M scale 90
ASTM D790 [Note (1)]	Flexural ultimate strength	≥14,000 psi	≥97 MPa
ASTM D792 [Note (1)]	Specific gravity	1.19 ± 0.01	1.19 ± 0.01
ASME PVHO-1 method, para. 2-3.7(d)	Ultraviolet (290 nm–330 nm) light transmittance	≤5%	≤5%
ASME PVHO-1 method, para. 2-3.7(e)	Clarity, visually rated	Must have readability	Must have readability
ASTM D696	Coefficient of linear thermal expansion at	$\leq 10^{-5}$ (in./in. °F)	$\leq 10^{-5}$ (mm/mm °C)
	°F / °C		
	−40 / −40	2.9	5.22
	−20 / −29	3.0	5.40
	0 / −18	3.2	5.76
	20 / −7	3.4	6.12
	40 / 4	3.7	6.66
	60 / 16	4.0	7.20
	80 / 27	4.3	7.74
	100 / 38	4.7	8.46
	120 / 49	5.1	9.18
	140 / 60	5.4	9.72
ASTM D648	Deflection temperature of plastics under flexure at 264 psi (1.8 MPa)	≥185°F	≥85°C
ASME PVHO-1 method, para. 2-3.8	Total residual monomer:		
	(a) methyl methacrylate	≤1.6%	≤1.6%
	(b) ethyl acrylate		

GENERAL NOTE: The manufacturer shall certify that the typical physical properties of the acrylic satisfy the criteria in this Table.

NOTE: (1) These tests require testing a minimum of two specimens. For others, test a minimum of one specimen. Where applicable, use the sampling procedures described in para. 2-3.7. For other tests, use the sampling procedures described in the appropriate ASTM test methods. Where two specimens are required in the test procedure, the average of the test values shall be used to meet the requirements of the minimum physical properties of this Table.

ASMENORMDOC.COM : Click to view the full PDF of ASME PVHO-1 2019

PVHO-1 Form VP-3 Material Manufacturer's Certification for Acrylic

The _____ in. (cm) × _____ in. (cm) acrylic sheet/custom castings of _____ in. (cm)

nominal thickness in Lot No. _____ have been produced by _____

under the trademark of _____.

These castings possess typical physical properties satisfying the minimum values specified in Safety Standard for Pressure Vessels for Human Occupancy, Section 2, Table 2-3.4-1, in accordance with the material manufacturer's Quality Assurance Manual Edition _____, Rev. _____, dated _____.

_____ _____
(authorized representative of manufacturer of plastic) (date)

_____
(name and address of manufacturer of plastic)

GENERAL NOTE: This form may be reproduced and used without written permission from ASME if used for purposes other than republication.

ASMENORMDOC.COM : Click to view the full PDF of ASME PVHO-1 2019

Table 2-3.4-2 Specified Values of Physical Properties for Each Casting

Test Procedures	Physical Property	Specified Values	
		U.S. Customary Units	SI Units
ASTM D638 [Note (1)]	Tensile:		
	(a) ultimate strength	≥9,000 psi	≥62 MPa
	(b) elongation at break	≥2%	≥2%
	(c) modulus of elasticity	≥400,000 psi	≥2 760 MPa
ASTM D695 [Note (1)]	Compressive:		
	(a) yield strength	≥15,000 psi	≥103 MPa
	(b) modulus of elasticity	≥400,000 psi	≥2 760 MPa
ASTM D790 [Note (1)]	Flexural ultimate strength	≥14,000 psi	≥97 MPa
ASME PVHO-1 method, para 2-3.7(c)	Compressive deformation at 4,000 psi (27.6 MPa) and 122°F (50°C) for 24 hr	≤1.0%	≤1.0%
ASME PVHO-1 method, para 2-3.7(d)	Ultraviolet transmittance [for 0.5 in. (12.5 mm) thickness]	≤5%	≤5%
ASME PVHO-1 method, para. 2-3.7(e)	Visual clarity	Must pass readability test	Must pass readability test
ASME PVHO-1 method, para. 2-3.8	Total residual monomer:		
	(a) methyl methacrylate	≤1.6%	≤1.6%
	(b) ethyl acrylate		

GENERAL NOTE: To be verified by testing of specimen from each casting or lot as defined in para. 2-3.5.

NOTE: (1) These tests require testing a minimum of two specimens. For others, test a minimum of one specimen. Where applicable, use the sampling procedures described in para. 2-3.7. Where two specimens are required in the test procedure, the average of the test values shall be used to meet the requirements of the minimum physical properties of this Table.

ASMENORMDOC.COM : Click to view the full PDF of ASME PVHO-1 2019

PVHO-1 Form VP-4 Material Testing Certification for Acrylic

1. Test specimens have been ☐ cut from casting or ☐ supplied already cut by _____

2. Test specimen taken from ☐ acrylic sheet or ☐ custom castings no. _____ in Lot no. _____ of _____ in. (cm)

nominal thickness that have been produced by _____ under the
(material manufacturer)

trademark of _____ possess the following physical and chemical properties:

Test Method	Property	Results
ASME PVHO-1, para. 2-3.7(c)	Compressive deformation at 4,000 psi (27.6 MPa) and 122°F (50°C)	_____
ASTM D638	Tensile:	
	(a) ultimate strength	_____
	(b) elongation at break	_____
	(c) modulus of elasticity	_____
ASTM D695	Compressive:	
	(a) yield strength	_____
	(b) modulus of elasticity	_____
ASME PVHO-1, para. 2-3.7(d)	Ultraviolet transmittance [for $^1/_2$ in. (12.5 mm) thickness]	_____
ASME PVHO-1, para. 2-3.7(e)	Visual clarity	_____
ASME PVHO-1, para. 2-3.8	Total residual methyl methacrylate and ethyl acrylate monomers	_____%
		_____%

The experimentally proven properties satisfy the minimum values specified in Table 2-3.4-2 of the Safety Standard for Pressure Vessels for Human Occupancy.

_____ (authorized representative of material testing laboratory)

_____ (date)

_____ (name and address of material testing laboratory)

GENERAL NOTE: This form may be reproduced and used without written permission from ASME if used for purposes other than republication.

ASMENORMDOC.COM : Click to view the full PDF of ASME PVHO-1 2019

Table 2-4.5-1 Annealing Schedule for Acrylic Windows

Part A: Minimum Heating Times of Elevated Temperature Annealing of Acrylic

Thickness, in. (mm)	Heat Time [Note (1)], hr (h), for Acrylic Placed in a Forced-Air Circulation Oven Maintained at a Set Temperature Within ±5°F (±2.8°C)			
	230°F (110°C), Max.	212°F (100°C), Min.	195°F (90°C), Min.	185°F (85°C), Min.
0.50 (12.70)	3.5	4.0	6.0	11.0
0.75 (19.05)	4.4	4.9	6.9	11.8
1.00 (25.40)	5.3	5.9	7.7	12.6
1.25 (31.75)	6.2	6.8	8.6	13.4
1.50 (38.10)	7.1	7.7	9.4	14.1
1.75 (44.45)	8.0	8.6	10.3	14.9
2.00 (50.80)	8.9	9.6	11.1	15.7
2.25 (57.15)	9.8	10.5	12.0	16.5
2.50 (63.50)	10.6	11.4	12.9	17.3
2.75 (69.85)	11.5	12.4	13.7	18.1
3.00 (76.20)	12.4	13.3	14.6	18.9
3.25 (82.55)	13.3	14.2	15.4	19.6
3.50 (88.90)	14.2	15.1	16.3	20.4
3.75 (95.25)	15.1	16.1	17.1	21.2
4.00 (101.60)	16.0	17.0	18.0	22.0
>4.00 (101.60)	4	6	6	6 (per in. of additional thickness over 4)

Part B: Maximum Cooling Rates for Acrylic Subjected to Elevated Annealing Temperatures

Thickness, in. (mm)	Maximum Cooling Rate, °F/hr (°C/h)	Time, hr (h), to Cool Acrylic From the Indicated Annealing Temperature at the Maximum Permissible Rate to the Maximum Allowable Removal Temperature of 120°F (49°C)			
		230°F (110°C)	212°F (100°C)	195°F (90°C)	185°F (85°C)
0.500 to 0.750, incl. (13 to 19, incl.)	25 (14)	4.5	3.5	3	2.5
0.875 to 1.125, incl. (22 to 28, incl.)	18 (10)	6	5	4	4
1.250 to 1.500, incl. (32 to 38, incl.)	13 (7.2)	8.5	7	6	5
1.750 (44)	11 (6.1)	10	8.5	7	6
2.000 (50)	10 (5.5)	11	9	7.5	6.5
2.250 (57)	9 (5)	12.5	10	8.5	7.5
2.500 (64)	8 (4.5)	14	11.5	9.5	8.5
3.000 (75)	7 (4)	16	13	11	9.5
3.250 (82)	6 (3.5)	18.5	15	12.5	11
3.500 (89)	6 (3.5)	18.5	15	12.5	11
3.750 (92)	6 (3.5)	18.5	15	12.5	11
4.000 (100)	5 (3)	22	18	15	13
4.000 to 6.000, incl. (100 to 150, incl.)	4 (2)	27.5	23	19	16.5
6.000 to 8.000, incl. (150 to 200, incl.)	3 (1.5)	37	30.5	25	22
8.000 to 10.000, incl. (200 to 250, incl.)	2 (1)	55	45.5	37.5	32.5
10.000 to 12.000, incl. (250 to 300, incl.)	1 (0.5)	110	91	75	65

NOTE: (1) Includes period of time required to bring part up to annealing temperature, but not cooling time.

ASMENORMDOC.COM : Click to view the full PDF of ASME PVHO-1 2019

PVHO-1 Form VP-5 Pressure Testing Certification

Window Identification _____

Window Description

Maximum allowable working pressure _____

Maximum design temperature _____

Test Arrangement

Windows tested in operational viewport/simulated viewport _____
(operational/simulated)

Operational/simulated viewport drawing no. _____

Window tested according to subsection 2-7 _____
(yes/no)

Test pressure _____ psi _____ MPa

Overpressure ratio (test pressure/maximum allowable working pressure) _____

Pressurizing medium temperature _____ °F _____ °C

Rate of pressurization (average) _____

Duration of sustained pressurization _____

Test Observations (yes/no)

Leakage _____

Permanent deformation _____

Crazing _____

Cracking _____

The acrylic window was pressure tested according to the procedure of subsection 2-7 of the Safety Standard for Pressure Vessels for Human Occupancy and was found to perform satisfactorily without any visible permanent deformation, crazing, or cracking.

_____ (pressure test supervisor) _____ (date)

_____
(name and address of pressure testing laboratory)

_____ [authorized representative of chamber manufacturer (windows for new chamber) or user (windows for replacement in an existing chamber] _____ (date)

GENERAL NOTE: This form may be reproduced and used without written permission from ASME if used for purposes other than republication.

ASMENORMDOC.COM : Click to view the full PDF of ASME PVHO-1 2019

PVHO-1 Form VP-6 Acrylic Window Repair Certification

Window Identification _____

1. Window Shape (From Visual Inspection)

Conical frustum _____ Double beveled _____

Spherical sector with conical edge _____ Spherical sector with square edge _____

Hemisphere with equatorial flange _____ Flat disk _____

Hyperhemisphere with conical edge _____ NEMO _____

Cylinder _____

2. Design Data (From PVHO-1 Form VP-2)

Original design certification prepared by _____

Maximum allowable working pressure _____ Maximum design temperature _____

Minimum thickness (calculated t) for above temperature and pressure _____

3. Original Fabrication Date (From PVHO-1 Form VP-1)

Original fabrication certification prepared by _____ (name of preparer)

_____ (name of fabricator)

Fabricated according to drawing _____ Identification marking _____

Actual minimum thickness, t _____ Actual inside diameter, D_i _____

Actual outside diameter, D_o _____

4. Repair Instructions (Refinish the following surfaces)

High-pressure face _____ Low-pressure face _____ Bearing surfaces _____

Beveled edges _____ Sealing surfaces _____

Spot casting meeting requirements of paras. 2-3.10 and 2-9.8 is authorized where appropriate _____

The minimum thickness, t, of the repaired window is to meet or exceed _____

The inside diameter, D_i, of the repaired window is to meet or exceed _____

Repair of window has been authorized by _____ (name of company)

_____ (name of authorized representative) _____ (signature of authorized representative)

5. Repair History (The following surfaces were refinished)

High-pressure face _____ Low-pressure face _____

Bearing surfaces _____ Beveled edges _____

Spot Casting Process

Resin used _____ Catalyst used _____

Polymerization technique _____

Tensile strength of bond with acrylic per para. 2-3.10(a) _____

Sketch of spot casting locations attached _____ (yes) _____ (no)

Minimum thickness of repaired window _____

The minimum thickness of repaired window meets or exceeds minimum calculated thickness of paras. 2-2.2 through 2-2.5 _____ (yes) _____ (no)

The repaired window was annealed at _____ for _____ hr

During fabrication, the original window identification markings were Left intact _____ Removed and reapplied _____

The repair marking applied to the window reads as follows: _____

The refinished surfaces, spot castings, and minimum thickness of the repaired window meet all the requirements of Section 2 and the attached Design Certification PVHO-1 Form VP-2.

_____ (authorized representative of window fabricator)

_____ (name and address of window fabricator)

GENERAL NOTES:

(a) The data for parts 1 through 4 of this form shall be provided and certified by the company/individual authorizing the repair of windows.

(b) The repair process information required by part 5 shall be provided and certified by the window fabricator performing the repair.

(c) This form may be reproduced and used without written permission from ASME if used for purposes other than republication.

ASMENORMDOC.COM : Click to view the full PDF of ASME PVHO-1 2019

Section 3
Quality Assurance for PVHO Manufacturers

3-1 GENERAL

This Section specifies the requirements for establishing and maintaining a Quality Assurance Program for PVHO manufacturers and window fabricators in accordance with the applicable edition of this Standard.

3-1.1 Scope

The responsibilities set forth herein relate only to compliance with this Standard.

3-1.2 Quality Assurance System Verification

This Section applies only to the structure and content of a Quality Assurance Program.

3-2 RESPONSIBILITIES

3-2.1 Compliance With This Standard

The PVHO manufacturer and window fabricator are responsible for implementing and maintaining the quality requirements as described in ISO 9001 or ISO 13485, whichever is applicable. It is not, however, the intent of this Standard to require a PVHO manufacturer's or window fabricator's Quality Assurance Program to be certified in accordance with ISO 9001 or ISO 13485 requirements by a third party, and nothing in this Standard should be construed to imply such a requirement.

3-2.2 Documentation of the Quality Assurance Program

The PVHO manufacturer and window fabricator shall be responsible for documenting the Quality Assurance Program in accordance with this Section.

3-2.3 Certification

The PVHO manufacturer and window fabricator shall certify compliance with this Standard by furnishing the purchaser with the appropriate PVHO-1 forms and by marking in accordance with the requirements of this Standard.

3-2.4 Right of Access

The purchaser or their authorized representative, authorized inspection agency representatives, and regulatory agency representatives shall be granted reasonable access to PVHO manufacturer and window fabricator's facilities for the purpose of conducting inspection or qualification activities.

3-2.5 Records

Records required for traceability shall be retained by the PVHO manufacturer and window fabricator in accordance with para. 1-7.9.

ASMENORMDOC.COM : Click to view the full PDF of ASME PVHO-1 2019

Section 4
Piping Systems

4-1 GENERAL

4-1.1 Scope

PVHO piping systems are subject to the requirements of this Section and any additional requirements specified in the User's Design Specification in accordance with subsection 1-4.

Piping systems constructed under the requirements contained in this Section are limited to design temperatures between 0°F and 150°F (−17.8°C and 65°C), inclusive.

This Section shall be used as an adjunctive document to ASME B31.1 or ASME B31.3. The user or an agent on behalf of the user shall specify the appropriate section of ASME B31 to be used by the designer.

Specific piping within the PVHO piping system may also be subject to other codes or standards, such as ASME B31.9, Building Service Piping; NFPA Fire Protection Standards; NFPA-99 for Health Care Facilities; and building codes.

This Section provides guidance and engineering requirements deemed necessary to the safe design and construction of a PVHO piping system. This Section is not all inclusive and does not relieve the designer of the responsibility to use competent engineering judgment.

(19) ### 4-1.2 Design and Fabrication

4-1.2.1 User's Design Specification. The user, or an agent on his/her behalf, who intends that a piping system be designed, fabricated, tested, and certified to be in compliance with this Section, shall provide, or cause to be provided, a written User's Design Specification. This shall set forth requirements as to the intended use and operating conditions in such detail as to constitute an adequate basis for designing, fabricating, and inspecting the system as required to comply with this Section. Those requirements shall include, as a minimum, the following:

(a) limitations and boundaries of the piping systems

(b) piping system maximum operating pressures, required pressurization and depressurization rates, ventilation rates, and the conditions under which those rates are to be maintainable [paras. 4-9.7.1(a) and 4-9.7.1(b)]

(c) conditions affecting the requirements for and amounts of stored gas reserves

(d) required number of breathing gas connections and their characteristics

(e) data that shall be provided to the owner and the duration of retention of that data by the fabricator if other than that required by para. 4-1.2.3, and the disposition of the data should the fabricator go out of business

4-1.2.2 Design Certification. Conformance of the piping system design to the requirements of this Section and the User's Design Specification shall be established by one of the following procedures:

(a) Professional Engineer Certification. A Professional Engineer, registered in one or more of the U.S. states or the provinces of Canada, or the equivalent in other countries, experienced in piping systems design, shall certify that the piping system was designed by them or under their direct supervision, or that they have thoroughly reviewed a design prepared by others, and that to the best of their knowledge, within the User's Design Specification, the piping system design complies with this Section.

(b) Independent Third-Party Certification. The piping system design shall be reviewed by an independent classification society competent in pressure vessels for human occupancy systems, and such organization shall provide a certification that, within the User's Design Specification, the piping system design complies with this Section.

(c) Fabricator's Certification. The fabricator of the piping system shall be responsible for complying with the requirements of this Section. The fabricator shall provide written certification of compliance with this Section and with the User's Design Specification.

4-1.2.3 Data Retention. The fabricator shall retain a copy of the User's Design Specification, the Design Certification, the Fabricator's Certification, and supporting data (test data, material test reports, as required by the User's Design Specification) for at least 5 yr. A copy of the piping system User's Design Specification, the Design Certification, and the Fabricator's Certification shall be provided to the user with the system.

4-2 MATERIAL REQUIREMENTS

4-2.1 Acceptable Materials

4-2.1.1 Pipe and Tube. Pipe and tube for use in PVHO piping systems, except as otherwise restricted or permitted, shall be of a material for which allowable stress values are listed in Nonmandatory Appendix A

ASMENORMDOC.COM : Click to view the full PDF of ASME PVHO-1 2019

of ASME B31.1, Nonmandatory Appendices A and B of ASME B31.3, or Table 4-2.1.1-1.

4-2.1.2 Fittings. Unless otherwise restricted or permitted, the following apply:

(a) Fittings that are attached to a pipe or tube by welding, brazing, or threading shall conform to the specifications and standards listed in Table 126.1 of ASME B31.1 and Table 326.1 of ASME B31.3.

(b) Fittings that are attached to a pipe or tube by other methods shall be of a material and type recommended by the fitting manufacturer for the application.

4-2.2 Limitations on Materials

4-2.2.1 Service Requirements. It is the responsibility of the designer to select materials suitable for the conditions of operation. All metallic materials used for oxygen service, breathing gas service, fire suppression, and water or steam service and all components subject to the requirements of para. 4-9.3 shall not use plating or coating with cadmium and shall not be manufactured from the following materials:

(a) carbon steel

(b) iron

Components of beryllium or those containing mercury shall not be used. Components containing asbestos shall not be used for breathing gas service applications.

4-2.2.2 Carbon Steel. The use of carbon steel pipe, tube, valves, and fittings in PVHO systems not subject to the requirements of para. 4-2.2.1 is permitted, provided that they are compatible with anticipated cleaning and operational procedures and are adequately protected against corrosion, both internally and externally.

The effects of the migration of rust and other corrosion products into downstream components such as valves and regulators shall be considered.

4-2.2.3 Aluminum. Aluminum may be used only when adequate precautions are taken to prevent contact with fluorochlorocarbon lubricants and hydroxide-based absorbents. Further, the corrosive effect of seawater and combinations of hydroxide chemicals and seawater shall be considered in alloys intended for use in marine systems.

4-2.2.4 Castings. Cast components are subject to possible porosity and should be avoided in helium service. Cast, ductile, and malleable iron pipe, tube, and fittings shall not be used. Cast components of other materials may be used if not otherwise prohibited by this Standard.

4-2.2.5 Seawater Service. Materials that will be repeatedly or continuously exposed to seawater shall be compatible with seawater service.

4-2.2.6 Oxygen Service. Materials that will be exposed to oxygen and oxygen lubricants shall be compatible with the combination of oxygen, lubrication, and flowing conditions to which they are exposed. For guidance in the selection of materials suitable for oxygen service, refer to CGA G4.4 and ASTM G88.

4-2.3 Lubricants and Sealants

Lubricants and sealants are necessary in breathing gas systems for lubricating O-rings, lubricating moving parts of pressure control valves, and lubricating and sealing pipe thread joints; however, due to the possible presence of oxygen-enriched gases and the ultimate use of the gas for respiratory purposes, lubricants and sealants shall be selected with care.

(a) Lubricants and sealants used in breathing gas and oxygen systems shall be of a type recommended by the manufacturer for the intended service.

(b) Fluorochlorocarbon-based lubricants shall not be used on aluminum.

4-2.4 Nonmetallic Materials

4-2.4.1 Hose Materials and Pressure Ratings

(a) *Maximum Allowable Working Pressure (MAWP)*. All hoses used in PVHO piping systems shall have a MAWP equal to or greater than the design pressure of the line in which they are used or a suitable relief valve set at the MAWP of the hose shall be provided.

(b) *Burst Pressure*. The burst pressure rating of any hose shall be at least 4 times its rated MAWP. The effect of fittings on the burst pressure shall be considered in establishing MAWP.

(c) *Liners*. The liners for hoses shall be appropriate for the intended service. Liners for use with breathing gases containing helium should also be relatively impervious to helium. Nylon, polytetrafluoroethylene (PTFE), and many natural and synthetic rubbers will normally satisfy these requirements.

(1) Liner materials are acceptable for breathing gas service if they will pass the off-gassing test contained in para. 4-9.14 or they are rated by the manufacturer for breathing gas service. PTFE, nylon, and flexible metal liners meeting the requirements of para. 4-2.2 and that have been cleaned for breathing gas service are acceptable for breathing gas and oxygen service without an off-gassing test.

(2) Hoses to be used for oxygen service shall use liner materials that are suitable for use with gaseous oxygen at the design pressure of the system or that are rated for such service by the manufacturer.

(3) Liner material shall be compatible with cleaning materials used to clean the hose assembly to the same level of cleanliness as the system of which it is a component.

ASMENORMDOC.COM : Click to view the full PDF of ASME PVHO-1 2019

(d) Reinforcement Layer. Reinforcement layer materials shall be compatible with the intended service.

(e) Outer Jacket. Jacket materials shall be compatible with the intended service. The outer jacket on hoses intended for helium service shall be perforated or sufficiently permeable to allow escape of gas that may seep through the inner liner. For other gas service applications, the designer should consider the possible needs for outer jacket perforation.

(f) Fittings. Fitting material shall be suitable for the intended service, and fitting materials shall comply with para. 4-2.2. Fittings used on life-critical breathing devices shall be of types that are resistant to inadvertent disengagement.

4-2.4.2 Installation

(a) All permanently installed hoses shall be installed such that they are not subject to bending at radii less than the manufacturer's minimum rated bend radii and in accordance with all other applicable manufacturer's recommendations.

(b) Permanently installed hoses used to compensate for expansion and contraction shall be installed in accordance with manufacturer's recommendations. Where possible, hoses should be installed to always be in single-plane bending and free of torsional or axial loading.

(c) Hoses installed in locations subject to abnormal levels of cyclic vibration shall be sized and selected for this type of service.

4-2.4.3 Marking. Hoses shall be marked with the manufacturer's name or trademark, type or catalog number, MAWP, test pressure, and test date. This information shall be permanently printed either on the hose or on a permanently attached corrosion-resistant metal tag. Metal tags, when used, shall be affixed so as not to abrade the hose or prevent the hose from normal bending or expansion due to pressure.

4-2.4.4 Hoses Subject to External Pressure. The following are required for hoses subject to external pressure:

(a) The hose construction shall be of a type that is resistant to collapse.

(b) The liner, if present, shall be securely bonded to the reinforcing layer.

(c) Fittings shall be of a type that forms a seal at the end of the hose. Fittings that leave the cut end of the hose open to pressure shall not be used.

(d) Hoses shall be installed in a manner that minimizes minor kinks, crushes, etc., which may not harm the internal working pressure capability of the hose but may cause it to collapse when subject to external pressure.

(e) Tight radius bends and torsional loads shall be avoided.

4-2.4.5 Testing

(a) Hoses that are received made up from the hose manufacturer and that were tested by the manufacturer in a manner substantially equivalent to the procedure described in para. 4-9.14 need not be retested.

(b) Locally assembled hose assemblies shall be tested as prescribed in para. 4-9.14 before being placed in service. Hose assemblies may be tested individually or as a portion of the system of which they form a part.

(c) Locally assembled hose material intended for external pressure service shall be tested as follows:

A representative section of hose shall be made up with fittings of the type intended for use with the hose using normally expected attachment procedures. The section of hose shall be bent 180 deg at a bend radius equal to the minimum bend radius expected in service. The hose shall be exposed to an external pressure 1.5 times its maximum system external pressure for 1 hr. Air is an acceptable pressurizing medium. The hose shall exhibit no evidence of collapse, either of the casing (outer jacket and reinforcing layer) and liner together, or of the liner separately. Hose collapse may be determined by observing the pressure drop at a specific flow rate of a fluid flowing through the hose. The pressure drop will increase significantly when collapse occurs. Note that liner collapse may occur with no visible deformation occurring in the casing. Hose collapse may also be determined by filling the hose with water and measuring the amount of water displaced as the hose is pressurized.

4-2.4.6 Nonmetallic Pipe and Tube and Bonding Agents. Design properties of these materials vary greatly and depend upon the materials, type, grade, and lot. For new nonmetallic piping assemblies, particular consideration shall be given to the possibility of

(a) destruction by fire

(b) decrease in tensile strength at elevated temperature

(c) toxic off-gassing, in-service, and fire condition

(d) adequate support for flexible pipe

(e) breathing gas compatibility

4-3 DESIGN OF COMPONENTS

4-3.1 Straight Piping Under External Pressure

For determining wall thickness and stiffening requirements for straight pipe and tubing under external pressure, the requirements of ASME BPVC, Section VIII, Division 1 or Division 2 shall be followed.

4-3.2 Straight Piping Under Internal Pressure

4-3.2.1 Minimum Wall Thickness. The thickness of pipe or tubing shall not be less than as required in ASME B31.1, para. 104.1, or as specified in ASME B31.3, para. 304.1.

ASMENORMDOC.COM : Click to view the full PDF of ASME PVHO-1 2019

4-3.2.2 Additional Thickness Requirements. The thickness determined from the formulas in ASME B31.1, para. 104.1, and ASME B31.3, para. 304.1 are theoretically ample for both bursting pressure and material removed in threading. The following requirements are mandatory to furnish additional mechanical strength:

(a) Threaded steel or stainless steel pipe for use at pressures over 500 psig shall have a minimum ultimate tensile strength of 48,000 psi (330 MPa) and a wall thickness at least equal to Schedule 80 of ASME B36.10M. For pressures of 500 psi and less, threaded pipe shall have a wall thickness at least equal to Schedule 40 of ASME B36.10M.

(b) Threaded brass or copper pipe used for the services described above shall have a wall thickness at least equal to that specified above for steel pipe.

(c) Pipe or tubing subject to bending shall comply with the wall thickness requirements of ASME B31.1, Table 102.4.5, or ASME B31.3, para. 332.

4-3.3 Bending of Pipe and Tube

Pipe and tube bent or formed for a PVHO piping system shall be bent or formed as described in ASME B31.1, para. 102, or ASME B31.3, para. 332.

(a) Bending of pipe and tube in a PVHO piping system shall be performed in accordance with a written bending procedure.

(b) Pipe and tube may be bent by any hot or cold method and to any radius that will result in a bend surface free of cracks and buckles.

4-3.4 Stress Analysis of Piping Components

It shall be the responsibility of the designer to determine that the piping is adequately supported and that the piping system is sufficiently flexible to accommodate the relative movements and changes in temperature.

Should the designer determine that a stress analysis is required, it shall be performed in accordance with the requirements of ASME B31.1, para. 104.8, or ASME B31.3, para. 319.

4-3.5 Pressure Design of Fabricated Joints and Intersections

(a) Except as permitted in (b), where joints are fabricated and the service does not exceed 5 psig, ASME B31.1, para. 104.3 or ASME B31.3, para. 304.3 shall be followed.

(b) Fabricated branch joints made by brazing a branch line into an extruded opening in the run line may be used, provided that

(1) The line MAWP is 175 psig or less.

(2) The joint meets the reinforcement requirements of ASME B31.1, para. 104.3.1(g).

4-3.6 Pressure Design of Bolted Flanges and Blanks

The pressure design of bolted flanges and blanks shall be in accordance with ASME B31.1, para. 104.5.

Gasket and seal materials and design shall be suitable for the intended service.

4-3.7 Design of Penetrations Through the Pressure Boundaries of PVHOs

See Nonmandatory Appendix B for guidelines for the design of piping penetrations through the pressure boundaries of PVHOs.

4-4 SELECTION AND LIMITATIONS OF PIPING COMPONENTS

4-4.1 Pressure Requirements

4-4.1.1 Maximum Allowable Working Pressure. The MAWP of all components shall be equal to or greater than the maximum operating pressure of the system or line of which they form a part.

4-4.1.2 Differential Pressures. Where components may be subject to differential system pressures, the differential pressure capacity of the component shall be equal to, or greater than, the maximum possible differential pressure; otherwise, suitable overpressure protection shall be provided.

4-4.1.3 Alternating Internal and External Pressures. Components subject to alternating (i.e., both internal and external) pressure shall be designed for the maximum differential pressure that may exist in either direction.

4-4.1.4 Pressure Ratings. When possible, all pipe and tubing of the same material and diameter used in a single PVHO piping system shall have the same pressure rating. When this is not possible, special precautions shall be taken to prevent inadvertent mixing of materials.

4-4.2 Valves

The designer shall select valves suitable for the intended service.

4-4.2.1 Valves Subject to Internal and External Pressures. Valves subject to both internal and external pressures shall employ seals and stem packing suitable for bidirectional service.

4-4.2.2 Stop Valves. Stop valves shall be selected and installed to close with a clockwise rotation of the valve handle.

4-4.2.3 Ball Valves. Ball valves shall employ blowout-proof stem designs.

ASMENORMDOC.COM : Click to view the full PDF of ASME PVHO-1 2019

4-4.2.4 Service Access. Valves in breathing gas and other life-sensitive systems shall be selected and installed to provide access for maintenance.

4-4.2.5 Quick-Opening Valves. Quick-opening valves shall not be used in oxygen systems with a MAWP over 125 psig. Quick-closing valves (e.g., an excess flow check valve) may be used regardless of pressure, provided that their capacity is sufficiently less than the capacity of upstream components so that closure of the valve will not result in a pressure rise at the inlet to the valve large enough to cause hazardous adiabatic compression heating of the gas.

4-4.2.6 Remotely Operated Valves. Remotely operated valves shall be selected and installed so that they fail in the safe position. Valves in services that cannot tolerate interruptions shall be provided with a manual override or bypass.

4-4.2.7 Relief Valves. Where tamper-proof design is required, relief valves used for protection against overpressures in excess of system service pressures shall be "V" stamped valves manufactured in accordance with ASME BPVC, Section VIII.

4-4.3 Filters

4-4.3.1 Element Collapse Pressure Rating. Elements of filters used in breathing gas and other life-sensitive systems shall have a collapse pressure rating equal to or greater than the design pressure of the line in which they are installed, or the filter shall be fitted with a differential pressure device indicating when the element needs renewal or cleaning.

4-4.3.2 Element Construction. All particulate filters in pressurized lines in breathing gas and other life-sensitive systems shall use elements of the woven wire, screen, or sintered metal types. Sintered metal elements should be avoided in high-flow, high-vibration, or other applications conducive to element deterioration. Cloth and paper elements shall not be used.

4-4.3.3 Bypass Requirements. In systems where the ability to maintain uninterrupted service is required, all particulate filters shall be installed so that a clogged filter can be bypassed without disrupting the fluid flow to the end-use point.

4-4.4 Mufflers

Mufflers used for oxygen service (including vent lines from oxygen service systems) shall be fabricated of materials that are compatible with oxygen.

4-5 SELECTION AND LIMITATIONS OF PIPING JOINTS

4-5.1 Welded Joints

Welded joints in PVHO piping systems shall be constructed in accordance with the requirements of paras. 127, 131, and 132 of ASME B31.1 or paras. 328, 330, and 331 of ASME B31.3.

Welded joints of NPS (nominal pipe size) 2½ (DN 65) pipe size or smaller may be socket welded or butt welded. Welded joints larger than NPS 2½ (DN 65) pipe size shall be butt welded.

4-5.2 Brazed Joints

Brazing shall be performed in accordance with ASME B31.3, para. 333.

The Brazing Procedure Specification and the Procedure Qualification Record shall meet the requirements of ASME BPVC, Section IX or AWS B2.2.

Fabricator certification of the brazing procedure, procedure qualification, and brazer qualification is required.

4-5.3 Mechanical Joints

4-5.3.1 Seal Selection. Mechanical joint designs employing seals where effective sealing is not dependent on bolt preloading are recommended.

4-5.4 Threaded Joints

4-5.4.1 Pressure Limitations

(a) Fittings shall have a pressure rating equal to or greater than the MAWP of the system in which they are used.

(b) Size–pressure limits for pipe threaded joints shall be as follows:

Size NPS, in.	Pressure
>3	Not permitted
2½–3	400 psig
2	600 psig
1¼–1½	800 psig
1	1,500 psig
≤¾	MAWP of the fittings or pipe, whichever is less

(c) Straight-thread O-ring-sealed fittings may be used without limitation on size.

4-5.4.2 Helium Service. For helium service, pipe threads should be avoided; straight-thread O-ring-sealed fittings are recommended over pipe thread fittings for helium service.

ASMENORMDOC.COM : Click to view the full PDF of ASME PVHO-1 2019

4-5.4.3 Lubricants. Any compound or lubricant used in threaded joints shall be suitable for the service conditions and shall not react unfavorably with either the service fluid or the piping materials.

4-5.4.4 Seal Welding. Threaded joints that are to be seal welded shall be made up without any thread compound, and the weld shall provide complete (360 deg) coverage. Seal welding shall be done by using qualified welders in accordance with ASME BPVC, Section IX per ASME B31.1, para. 127.5, or ASME B31.3, para. 328.2. Seal welds shall not be considered as contributing to the mechanical strength of a joint.

4-5.4.5 Stainless Steel Threads. To reduce the possibility of galling where pipe threads are to be used between stainless steel components, there shall be a hardness difference between the thread surfaces of the two components of at least 5 points on the Rockwell B scale, or some other method of galling prevention shall be used.

4-5.4.6 Straight Threads. When straight-thread O-ring-sealed fittings are used in locations that may subject the fitting to vibration or a torque that would tend to unscrew it, provision shall be made to prevent inadvertent loosening of the fitting.

4-5.4.7 Aluminum Threads. A suitable thread compound shall be used in making up threaded joints in aluminum fittings to prevent seizing. Aluminum pipe should not be threaded.

4-5.5 Joints and Fittings in Tubes

Factors such as vibration loads and frequent disassembly and reassembly of the piping system shall be considered in the selection of the type of tube fittings to be used.

4-5.5.1 Fittings Subject to Frequent Disassembly. The designer shall give special consideration to the selection of fittings in locations where frequent disassembly and reassembly is likely. For these locations, one of the following fitting types shall be used:

(a) flare fittings

(b) welded or brazed fittings employing a flat-face seal mechanical union integral to the fitting

(c) O-ring-sealed, straight-thread fittings

4-5.5.2 Limitations. Compression-type fittings of aluminum shall not be reused. Bite-type fittings shall not be used on metallic pipe in PVHO piping systems. Welded fittings may be used subject to the requirements of para. 4-5.1. Brazed fittings may be used subject to the requirements of para. 4-5.2.

4-5.5.3 Restrictions. Fittings and their joints shall be compatible with the tubes with which they are to be used. They shall conform to the range of wall thickness and method of assembly recommended by the manufacturer, except that brass fittings may be used on stainless steel or nickel-copper tube under the following restrictions:

(a) Flared Tube. The tube shall be flared using a suitable flaring tool for the tube material, and a crushable metal gasket shall be used between the tube and the body of the fitting.

(b) Compression Fittings. The nuts and ferrules used shall be of the same material type (e.g., stainless steel or nickel-copper) as the tube, and the tube end shall be pre-swaged using a swaging tool or a suitable temporary fitting.

4-5.5.4 Cutting of Tube. All tube that is to be used with flare tube fittings shall be saw cut.

4-6 SUPPORTS

It shall be the responsibility of the designer to determine the support requirements of the piping system. The suggested support spacing is found in ASME B31.1, Table 121.5, or ASME B31.3, para. 321.

Where detailed support designs and calculations are required, they shall be performed in accordance with ASME B31.1, para. 119, or ASME B31.3, para. 319, as applicable.

4-7 INSPECTION

4-7.1 Inspection of Welded Joints

All welds in PVHO piping systems that are subject to stresses due to pressure shall be inspected in accordance with the requirements of Table 4-7.1-1. The inspection procedures and acceptance standards shall be in accordance with ASME B31.1, para. 136, or ASME B31.3, para. 340. The fabricator (or his/her agent) shall ensure that all inspection personnel are qualified to perform the required inspections.

4-7.2 Inspection of Brazed Joints

Brazed joints performed in accordance with para. 4-5.2 shall be subject to a visual inspection as a minimum. The following acceptance criteria shall apply:

(a) Preinserted alloy-type joints may be considered satisfactory when, before any face feeding, the total length of exposed brazing alloy between the outside surface of the pipe or tube and the outer end of the fitting is greater than $^3/_4$ of the circumference, with the greatest unexposed portion not exceeding 10% of the circumference.

(b) Face-fed joints shall show a complete ring of brazing alloy between the outside surface of the line and the outer end of the fitting.

ASMENORMDOC.COM : Click to view the full PDF of ASME PVHO-1 2019

4-8 TESTING

4-8.1 Hydrostatic Tests

Pressure testing of the piping systems may be carried out at either the component or system level. When component-level testing is specified in the User's Design Specification, a postassembly system leak test to operating pressure shall be performed.

Where a hydrostatic test is not possible or desirable, refer to para. 4-8.2 for pneumatic test requirements.

4-8.1.1 Test Fluid. Water shall normally be used for a hydrostatic test fluid unless otherwise specified by the owner in the User's Design Specification. Test water shall be clean, oil free, and of such purity as to minimize corrosion of the material in the piping system.

4-8.1.2 Test Pressure. Piping systems shall be subjected to a hydrostatic test pressure not less than 1.5 times the MAWP of the system or subsystem. Any component requiring isolation shall be isolated.

4-8.1.3 Holding Time. The hydrostatic test pressure shall be continuously maintained for a minimum of 10 min and for such additional time as may be necessary to conduct the examinations for leakage.

4-8.1.4 Examination. Examinations for leakage shall be made of all joints and connections. The piping system, exclusive of possible localized instances at pump or valve packings, shall show no visual evidence of weeping or leaking.

4-8.1.5 Air Vents. Where a complete piping system is to be hydrostatically tested, vents shall be provided at all high points of the piping system in the position in which the test is to be conducted, to permit purging of air while the component or system is filling. As an alternative, the required venting may be provided by the loosening of flanges, tube fittings, or union joints in pipelines, or by the use of equipment vents during the filling of the system.

4-8.2 Pneumatic Tests

4-8.2.1 Limitations. Pneumatic testing shall not be used in lieu of other means of pressure testing except as limited in para. 4-8.2.3, or when one or more of the following conditions exist:

(a) when the User's Design Specification requires or permits the use of this test as an alternative

(b) when piping systems are so designed that they cannot be filled with water

(c) when piping systems are to be used in service where traces of the testing medium cannot be tolerated (e.g., lines to gas analyzers)

4-8.2.2 Test Medium. The gas used as the test medium shall be oil free, nonflammable, and nontoxic or as specified in the User's Design Specification. Since compressed gas may be hazardous when used as a testing medium, it is recommended that special precautions for protection of personnel shall be observed during pneumatic testing.

4-8.2.3 Test Pressure. The pneumatic test pressure shall not be less than 1.2 nor more than 1.5 times the MAWP of the piping system. Any component requiring isolation shall be isolated.

4-8.2.4 Preliminary Test. A preliminary pneumatic test not to exceed 25 psig may be applied, prior to other methods of leak testing, as a means of locating major leaks. If used, the preliminary pneumatic test shall be performed in accordance with the requirements of paras. 4-8.2.2 and 4-8.2.3.

4-8.2.5 Application of Pressure. The pressure in the system shall be gradually increased to not more than $\frac{1}{2}$ of the test pressure, after which the pressure shall be increased in steps of approximately $\frac{1}{10}$ of the test pressure until the required test pressure has been reached.

4-8.2.6 Holding Time. The pneumatic test pressure shall be continuously maintained for a minimum of 10 min, after which the pressure shall be reduced to system design pressure for examination for leakage.

4-8.3 Leak Testing

Using a suitable test medium, all joints and connections shall be examined for leakage by bubble testing or equivalent method at the maximum operating pressure. The piping system, exclusive of possible localized instances at valve packings, should show no evidence of leaking. For helium systems, foaming of the test medium is allowed. Detectable leaks in oxygen systems shall not be permitted at any location.

Following either pneumatic or hydrostatic testing, the piping system shall be leak tested in final assembled condition.

4-9 SYSTEMS

There are various system and component selection considerations that may affect the operational safety of a PVHO piping system. Requirements regarding specific safety and component issues are found in this subsection. These requirements are not intended to be used in totality for all PVHO piping systems but rather should be applied by the designer as applicable to the specific industry in which the PVHO will be used.

It is the owner's and/or the designer's responsibility to determine which of these requirements is applicable to the PVHO piping system being designed.

Specific subsection 4-9 requirements being applied shall be enumerated in the User's Design Specification and thereby become mandatory.

ASMENORMDOC.COM : Click to view the full PDF of ASME PVHO-1 2019

4-9.1 System Design Requirements

The designer shall use the requirements in this subsection as appropriate for the specific industry PVHO piping system being designed. It is intended that only those requirements determined by the designer to be applicable be mandatory, and the designer should be thoroughly familiar with this subsection before application of these requirements. It is the designer's responsibility to determine the specific application of subsection 4-9 in accordance with accepted practice, jurisdictional requirements, and safety. Those requirements deemed mandatory by the designer because of industry, service, or regulatory requirement shall be listed in the User's Design Specification.

4-9.2 Pressurization and Depressurization Systems

4-9.2.1 Pressurization and Depressurization Rates. The PVHO pressurization and depressurization systems shall be capable of providing the full range of pressurization and depressurization rates specified in the User's Design Specification. When the pressurization gas comes from a stored gas system, the pressurization rates specified in the User's Design Specification shall be maintainable at maximum PVHO pressure at all gas storage pressures over 50% of maximum.

4-9.2.2 Ventilation Rates. On all PVHOs designed for operation in a continuous ventilation mode, the pressurization and depressurization system shall be capable of maintaining all required ventilation rates while holding depth stable to within the range specified by the User's Design Specification. Such systems should also be provided with a means of indicating the rate of flow of ventilation gas through the PVHO.

4-9.2.3 Stored Gas Reserves. The requirements for stored gas reserves vary with the application for which a PVHO system shall be used. The designer shall consider all pertinent operational and jurisdictional requirements.

4-9.2.4 Exhaust Inlet Protection. The inlets to all PVHO exhaust lines shall be fitted with a device that prevents a PVHO occupant from inadvertently blocking the opening to the line with a part of his/her body or be located in normally unoccupied areas, such as under the PVHO floor. PVHO exhaust line inlets shall also be located such that, where applicable, discharge of the fire-suppression system will not result in water collecting in the bottom of the PVHO being injected into the exhaust line.

4-9.2.5 Exhaust Locations. The exhausts from the depressurization system of PVHOs located inside enclosures shall be piped to a location outside the enclosure and at least 10 ft (3 m) away from any air intake.

4-9.2.6 Noise. Noise in a PVHO may interfere with voice communication, as well as present a risk of hearing damage if the level of noise is severe. The designer shall consider all sources of noise in the PVHO and shall design the system to prevent noise levels generated by routine PVHO operations from exceeding those determined in appropriate national standards to cause damage or discomfort to the PVHO occupants.

4-9.3 Pressure Boundary Valve Requirements

4-9.3.1 Internal Pressure PVHOs. All lines penetrating the pressure boundary of a PVHO subject only to internal pressure shall have a stop valve or a check valve, as appropriate, on the outside of the PVHO, as close as possible to the penetration. Where stop valves are placed in locations that prevent ready access in an emergency, they shall be provided with operators that are controllable from suitable accessible locations. Depressurization lines, drain lines, and other lines that normally communicate between PVHO pressure and outside atmospheric pressure shall also have a second valve. This second stop valve may be located either inside or outside of the PVHO.

4-9.3.2 External Pressure PVHOs. All lines penetrating the pressure boundary of a PVHO normally subject only to external pressure shall have a stop valve or check valve, as appropriate, as close as practically possible to the penetration on the inside of the PVHO. A second stop valve shall be provided on lines that are normally open to external pressure.

4-9.3.3 Internal and External Pressure PVHOs. PVHOs that may be subject to both internal and external pressure shall meet the requirements of paras. 4-9.3.1 and 4-9.3.2.

4-9.3.4 External Override. When valves are provided inside a PVHO to permit the PVHO occupants to control the pressure in the PVHO, an external means of overriding the effect of those valves shall be provided.

NOTE: The external override need not be on the same lines or on lines of similar capacity. The fundamental requirement is that there be some means provided, in advance, for gaining access to the PVHO if the inside personnel becomes incapacitated.

4-9.3.5 Special Requirements for PVHOs Used for Saturation Service. For PVHOs designed to be used for saturation applications, all lines that are open to PVHO pressure except pressure relief lines and pressure reference lines (e.g., all lines used for pressurization, depressurization, external gas, or water conditioning systems) shall have double valves with one stop, or check, valve inside the PVHO and the other valve outside.

4-9.3.6 Flow-Rate-Sensitive Valves. When check valves or stop valves cannot be used, a flow-rate-sensitive valve that closes automatically in the event of excess flow may be used. Flow-rate-sensitive valves, when used, may

ASMENORMDOC.COM : Click to view the full PDF of ASME PVHO-1 2019

satisfy the second stop valve requirement of paras. 4-9.3.1, 4-9.3.2, and 4-9.3.5.

4-9.3.7 Remotely Operated Stop Valves. Remotely operated stop valves, whose operation is triggered upon uncontrolled loss of pressure, are an acceptable alternative to the flow-rate-sensitive valves described in para. 4-9.3.6. Such valves may be used to satisfy the second stop valve requirements of paras. 4-9.3.1, 4-9.3.2, and 4-9.3.5, provided individual valves may be closed manually without triggering closure of other valves. Remotely operated valves used in pressure boundary applications shall also have a manual actuation capability, or a secondary means of pressurizing and/or depressurizing the PVHO shall be provided for use if the valve becomes inoperable.

4-9.4 Depth Gauges

4-9.4.1 Quantity and Location

(a) Each internal pressure PVHO compartment in a PVHO system shall have at least one dedicated depth gauge (PVHO compartment pressure indicator) indicating compartment PVHO internal pressure to the PVHO or system operator. Each compartment or PVHO in PVHO systems other than medical monoplace PVHOs also shall have a second depth gauge that may be located either inside or outside the PVHO.

(b) External pressure PVHOs and PVHOs subject to both internal and external pressure shall have dedicated gauges indicating both internal and external pressures to the PVHO or system operator, and separate gauges indicating these pressures to the PVHO occupants, unless the occupants are also the operators, as in the case of a submersible.

4-9.4.2 Calibration. A means shall be provided to permit depth gauges to be checked, while in use, against other system depth gauges normally accessible to the PVHO or system operator, or an external master gauge for accuracy.

4-9.4.3 Piping. The lines connecting depth gauges to their associated PVHOs shall not be used for any other purpose. The inside diameter of depth gauge lines shall not be smaller than 0.12 in. (3 mm).

4-9.4.4 Valve Arrangements. Valve arrangements used with depth gauges shall be designed so that the pressure source to which each gauge is connected is clearly indicated to the system operator.

4-9.5 Pressure Gauges Other Than Depth Gauges

All breathing gas and life-sensitive systems shall be fitted with at least one pressure gauge equipped with a gauge isolation valve. Measures to protect gauges from excessive vibration or sudden pressure changes shall be taken where appropriate.

4-9.6 Breathing Gas Systems

4-9.6.1 Breathing Gas Outlets. The number of breathing gas outlets provided in PVHOs shall be not less than the maximum rated number of occupants plus one, except for diving bells where the number of breathing gas outlets shall not be less than the maximum rated number of occupants. Each gas outlet shall have a stop valve. Each gas outlet shall be compatible (pressure and flow rate capacity, connection type, etc.) with the type of breathing apparatus listed in the User's Design Specification.

4-9.6.2 Redundancy of Breathing Gas Supply. The piping system shall be designed so that breathing gas can be delivered to the breathing gas outlets in PVHOs and to the divers' breathing gas manifold in diving bells from at least two supply sources.

4-9.6.3 Stored Gas Reserves. The designer shall consider all operational and jurisdictional requirements.

4-9.6.4 Multiple Gases. Where gases of different composition are connected to a distribution manifold or other distribution system, a positive means shall be provided to ensure that leaking valves will not result in an improper gas being supplied to the end-use point or result in backflow from one supply gas into the distribution system for another supply gas.

4-9.6.5 Labeling of Breathing Gas Outlets. All breathing gas outlets shall be labeled. Where the gas supplied is always known, the label shall indicate the type of gas supplied, such as "Oxygen." Where the gas supplied is subject to change based on operational requirements, the label shall contain a generic term, such as "Breathing Gas."

4-9.6.6 Separation of Breathing Gases. This Standard recognizes that complete separation of breathing gases of different types is generally not possible in PVHO applications. The designer shall take all reasonable steps to minimize the number of locations/situations where gases of different compositions need to use common distribution equipment and/or common outlets.

4-9.6.7 Pressure Control Valves in Demand Breathing Systems. Pressure control valves used in demand breathing systems shall meet the requirements of para. 4-9.7.6.

4-9.7 Pressure Control Valves

4-9.7.1 Performance Characteristics. The performance of a pressure control valve is characterized primarily by two factors, both of which shall be considered by the designer. These factors are

(a) the rate at which the outlet pressure decreases (from the set point) as flow demand increases. In many designs, there is a significant difference between

ASMENORMDOC.COM : Click to view the full PDF of ASME PVHO-1 2019

outlet pressure at the no-flow condition and the outlet pressure at design service flow rates. In unbalanced single-stage pressure control valves, outlet pressure may also be influenced by changes in inlet pressure. The flow effect is usually the controlling factor in design.

(b) limit flow capacity. This factor is a function of upstream pressure, orifice size, downstream pressure, and outlet porting size.

4-9.7.2 Seats. All pressure control valves used in life-sensitive systems shall employ soft seats capable of bubble-tight shutoff.

4-9.7.3 Filters. All pressure control valves used in life-sensitive systems, except those used in overboard dump systems for breathing masks, shall be provided with an upstream particulate filter that meets the requirements of para. 4-4.3.

4-9.7.4 Gauges. Gauges indicating the controlled pressure shall be provided with all pressure control valves, and they shall be located so as to be clearly visible to a person adjusting the setting of the pressure control valve.

4-9.7.5 Bypass Requirements. Except as otherwise required in para. 4-9.7.6(b), in systems where the ability to maintain uninterrupted service is required, all regulators shall be provided with either a redundant regulator of equal size or a manually operated bypass valve.

4-9.7.6 Pressure Control Valves Used in Demand Breathing Systems

(a) Capacity Requirements. The peak respiratory flow rates, both inspiratory and expiratory, in a demand breathing system are normally 3.0 to 3.14 times the net average flow as represented by the user's respiratory minute volume. Therefore, the capacity of pressure control valves used to support demand-type breathing apparatus shall be computed as

$$Q = \pi(N)(D)(RMV)(F)$$

where

D = maximum usage depth, atm absolute

F = factor, to be taken as 1.0 unless data is available to support a lower number

NOTE: $F = 1$ assumes all gas users inhale or exhale simultaneously. Consequently, as N becomes large, F will approach 0.5. For $N = 1$ or 2, F shall be taken as 1.0. For $N > 2$, F may be reduced as warranted by testing or experience with prior designs. F may also be reduced if it can be shown, either experimentally or analytically, that sufficient volume exists between the pressure regulation point and the usage point(s) to provide an accumulator effect capable of providing whatever differences may exist between the instantaneous flow rate requirements and the regulator capacity provided. In no case may F be reduced below 0.5.

N = maximum number of breathing apparatuses to be supported at one time

Q = regulator capacity at minimum design inlet pressure, ft^3/min (L/min)

RMV = maximum anticipated user respiratory minute volume, in ft^3/min (L/min) at usage pressure; the minimum RMV that may be used is 1.41 ft^3/min (40 L/min) for a working diver and 0.7 ft^3/min (20 L/min) for a resting diver or PVHO occupant

(b) Bypass Requirements

(1) The pressure control valves in piping circuits supplying breathing gas to divers using demand breathing apparatus in the water or in a diving bell shall be either of the following:

(-a) provided with a bypass loop containing a second pressure regulator of equal capacity and appropriate related components

(-b) arranged as a series of two or more pressure control valve stations each with a hand-operated bypass, appropriate related components, and a pressure control valve capable of accepting full initial supply pressure and providing regulated outlet conditions appropriate for the end-use function

(2) Hand-operated bypass valves may be used in systems supplying gas to PVHO mask breathing gas outlets, provided that adequate overpressure relief is provided.

(3) Bypass capability is not required for pressure control valves supporting single consumers where a service interruption is tolerable, e.g., for pressure control valves dedicated to each of several mask breathing gas outlets in a PVHO.

(4) Bypass capability is not required for pressure control valves supporting overboard dump manifolds in PVHOs.

4-9.8 Pressure Relief Requirements

4-9.8.1 Overpressure Relief

(a) All systems that may be subject to internal pressures in excess of their design pressure shall be provided with overpressure relief devices capable of maintaining system pressure not to exceed 110% of design pressure.

(b) Systems located inside of PVHOs that are normally pressurized at less than PVHO pressure shall be equipped with relief devices (check valves are acceptable) if any of the components in the system (e.g., vacuum gauges) are subject to damage, if PVHO pressure is released without a concurrent release of system pressure.

4-9.8.2 Underpressure Relief

(a) Piping or components located inside of PVHOs that are normally pressurized in excess of PVHO pressure shall be equipped with vacuum breakers if any of the

ASMENORMDOC.COM : Click to view the full PDF of ASME PVHO-1 2019

components of the system (such as pressure gauges) are subject to damage, if the PVHO is pressurized without pressure in the system.

(b) Piping or components located inside of PVHOs that are normally pressurized to a level less than PVHO pressure (e.g., mask overboard dump lines, medical suction lines, etc.) shall be provided with vacuum relief valves capable of relieving underpressures in excess of the maximum limits established by the system designer.

4-9.8.3 Rupture Disks. Rupture disks shall not be used except on gas containers.

4-9.8.4 Division Valves. Where piping systems operating at different pressures are connected, a division valve shall be provided that shall be designed for the higher system pressure.

4-9.8.5 Pressure-Reducing Valves. Relief devices shall be provided on the low-pressure side of the pressure-reducing valves, or the piping and equipment on the low-pressure side shall meet the requirements for the full system pressure.

The relief devices shall be located as close as possible to the reducing valve. The total relieving capacity provided shall be such that the design pressure of the low-pressure piping system will not be exceeded by more than 10% if the reducing valve fails open.

4-9.8.6 Bypass Valves. Where manually operated bypass valves are permitted around pressure control valves, they shall not have a maximum flow capacity greater than the reducing valve unless the downstream piping is adequately protected by relief devices or meets the design requirements of the higher system pressure.

4-9.8.7 Stop Valves. There shall be no stop valves between piping being protected and its protective device or devices, except that stop valves may be installed between a relief valve and the piping being protected under the following conditions:

(a) when, in the judgment of the designer, the hazard from a relief valve failing open exceeds the hazard presented by the possible concurrent occurrence of system overpressure plus a closed stop valve

(b) when a stop valve is provided between a relief valve and the associated protected piping, the valve shall be per the designer's specification for the fluid piping being protected, and the relief device shall be per ASME BPVC, Section VIII, Division 1, UG-125 through UG-136, or Section VIII, Division 2, Part 9

4-9.8.8 Exhausts From Relief Devices

(a) Exhausts from relief devices that are located inside enclosed spaces shall be piped outside of the space if operation of the relief device could result in overpressurizing the space.

(b) Exhausts from relief devices that are located inside enclosed spaces on lines containing gases other than air shall be ducted out of the space.

4-9.9 Color Coding

4-9.9.1 Consistent Color Codes. PVHO piping systems shall employ a consistent color coding system. Suggested guidelines are provided in Nonmandatory Appendix C.

4-9.9.2 Owner's Responsibility. Color code requirements vary substantially between the various jurisdictions in which PVHO systems may be used. It shall be the responsibility of the designer to specify the required color coding system.

4-9.10 Labeling

4-9.10.1 Piping and Gas Storage Vessels. All piping and gas storage bottles shall be labeled to show contents, direction of flow (when appropriate), and MAWP.

4-9.10.2 Critical Components. The designer shall determine all critical components whose function is not obvious from their location and appearance. These components shall be labeled as to function.

4-9.10.3 Panel-Mounted Components. All components that are mounted in panels shall be labeled as to function.

4-9.11 Soft Goods

4-9.11.1 Breathing Gas Systems. Soft goods used in breathing gas service shall be compatible with intended service fluids at the anticipated maximum pressures and shall be compatible with all anticipated cleaning procedures.

For breathing gas systems using oxygen-enriched gases (greater than 25% oxygen), consideration shall be given to the soft goods flammability in the oxygen-enriched environment. ASTM G63 and ASTM Manual 36 provide guidance.

4-9.11.2 Other Systems. Soft goods used in other systems shall be compatible with the fluids contained, at the maximum anticipated conditions of temperature and pressures.

4-9.12 Lubricants and Sealants

See para. 4-2.3, ASTM G63, and ASTM Manual 36 regarding appropriate materials and practices.

4-9.13 Cleaning Requirements

4-9.13.1 Oxygen and Breathing Gas Systems. The cleaning of oxygen and breathing gas piping systems is an essential part of PVHO piping system design and fabrication. The following are recommended guidelines:

ASMENORMDOC.COM : Click to view the full PDF of ASME PVHO-1 2019

(a) A written cleaning procedure with well-defined procedures, personnel responsibilities, acceptance/recleaning criteria, marking, packaging, and storage requirements shall be developed and implemented.

(b) Component handling procedures shall be developed and implemented so that components and systems, once cleaned, are not recontaminated.

(c) The cleaning procedures intended to be used with the piping system shall be considered by the designer during the selection of all materials, especially soft goods, and during the layout of the piping.

4-9.13.2 Components Located Inside PVHOs. Piping components that are to be located inside the PVHO shall also be cleaned on their exteriors. The exteriors of components for use inside marine systems should show no visible signs of oil or grease. The exteriors of components for use inside PVHOs with elevated oxygen environments should show no fluorescence typical of oil or grease when examined under ultraviolet light.

4-9.13.3 Prohibited Cleaning Materials. Trichloroethylene shall not be used to clean breathing gas systems or any components to be located inside a PVHO.

NOTE: When gas is passed through a moderately heated alkali bed (such as those used in most carbon dioxide scrubbers), residual trichloroethylene can decompose into highly toxic dichloroacetylene.

4-9.14 Off-Gassing Test for Hoses Used for Breathing Gas Service

4-9.14.1 Background. Some components used in the manufacture of hoses can give off vapors that are toxic if inhaled. For hoses to be considered acceptable for breathing gas service, they shall pass the off-gassing test described herein.

(a) hydrocarbon: for this test procedure, all organic compounds detectable by a total hydrocarbon analyzer

(b) methane equivalent: concentration of methane in air that will cause a total hydrocarbon analyzer to give an indication equivalent to that obtained from the gas being analyzed

4-9.14.2 Procedure

(a) Off-gassing measurements shall be made only on hoses that have not been flushed with air, gas, or water. Both the total hydrocarbon analyzer and the hose or hoses to be tested shall be maintained at a temperature not lower than 73°F (22.8°C) throughout the testing period.

(b) By this procedure, measurements are made of the increase in the hydrocarbon concentration of a stream of air flowing through the test hose at a flow rate of 28 LPM (1 CFM). The temperatures of the test hose, air supply, and analyzer shall not be lower than 73°F (22.8°C). A diagram of the flow arrangement is shown in Figure 4-9.14.2-1. Before the air passes through the test hose, the air shall be clean and shall contain no more than 1 mg/m^3 of hydrocarbons (methane equivalents). The analyzer shall be zeroed with air passing at the stipulated flow rate and temperature through the connector tubes only. The test hose shall then be inserted in the line and the airstream passed through it. For the ensuing 15 min, readings of the hydrocarbon concentration shall be recorded. The test hose shall be rated on the reading at the end of the 15-min test period. Hoses that contaminate the air by greater amounts than specified in Table 4-9.14.2-1 shall not be acceptable.

4-9.14.3 MIL-H-2815 provides guidance in testing hoses.

ASMENORMDOC.COM : Click to view the full PDF of ASME PVHO-1 2019

Table 4-2.1.1-1 Maximum Allowable Stress Values for Seamless Pipe and Tube Materials Not Listed in Nonmandatory Appendix A of ASME B31.1

Material	Specification	Temper or Grade	Strength, ksi	Maximum Allowable Stress Values in Tension, ksi
Alpha-brass	British Standard 1306	...	54	10.8
Copper water tube	ASTM B88, Types K & L	Drawn	36	6.0

GENERAL NOTE: 1 ksi = 1,000 psi.

(19) **Table 4-7.1-1 Mandatory Minimum Nondestructive Examinations for Pressure Welds in Piping Systems for Pressure Vessels for Human Occupancy**

Type of Weld	Examination Requirements
Butt welds (girth and longitudinal)	Pressure boundary and life-sensitive piping RT, all sizes Otherwise, RT for NPS over 2 in., MT or PT for NPS 2 in. and less
Branch welds (intersection and nozzle); size indicated is branch size	RT for NPS over 4 in., MT or PT for NPS 4 in. and less
Fillet welds, socket welds	PT or MT for all sizes and thicknesses

GENERAL NOTES:
(a) RT = radiographic examination; MT = magnetic particle examination; PT = liquid penetrant examination; NPS = nominal pipe size.
(b) For vent lines not subject to chamber pressure, MT or PT may be substituted for RT.
(c) All welds shall be given a visual examination in addition to the type of specific nondestructive test specified.
(d) It should be noted that it is impractical to radiograph some branch connections due to the angle of intersection or the configuration. If the joint configuration precludes RT, other nondestructive testing (NDT) methods should be substituted to establish the quality of the joint.
(e) Nondestructive examinations specified above do not apply to components made to standards listed in ASME B31.1, Table 126.1, or ASME B31.3, Table 326.1.

ASMENORMDOC.COM : Click to view the full PDF of ASME PVHO-1 2019

Figure 4-9.14.2-1 Flow Diagram of Apparatus for Measuring the Concentration of Hydrocarbons in a Stream of Air or Other Gas After It Has Passed Through a Test Hose

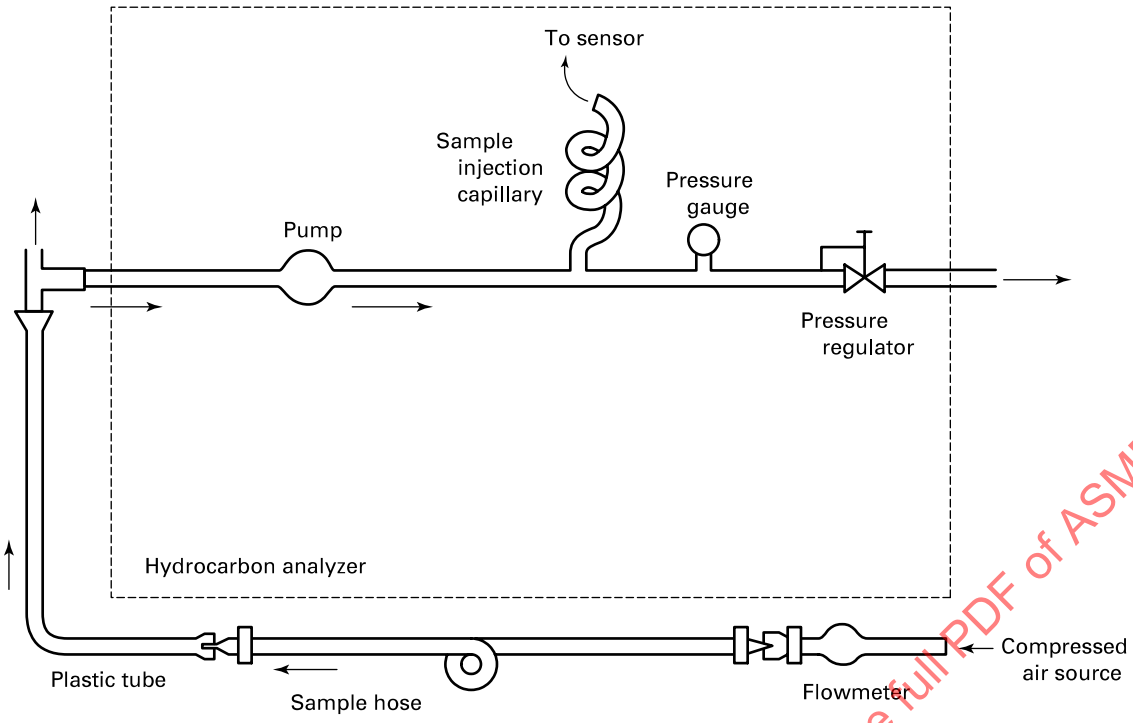

Table 4-9.14.2-1 Maximum Allowable Concentration of Hydrocarbons in Air Passing Through Hose

Hose Length, ft	Hydrocarbon Concentration as Methane Equivalents, mg/m^3
3	4
100	100

ASMENORMDOC.COM : Click to view the full PDF of ASME PVHO-1 2019

Section 5
Medical Hyperbaric Systems

5-1 GENERAL

5-1.1 Scope

This Section, along with Sections 1 through 4, provides minimum requirements for the design, assembly, inspection, testing, and certification of PVHO systems used specifically in medical hyperbaric therapy.

5-1.2 User's Design Specification

The user, agent on the user's behalf, or the manufacturer shall provide or cause to be written a User's Design Specification in accordance with subsection 1-4. This specification shall set forth the requirements as to the intended use of the chamber and operating conditions in such detail as to constitute an adequate basis for designing the system as necessary to comply with this Standard. They shall include, as a minimum, the following:

(a) rated number of occupants

(b) maximum operating pressure

(c) pressurization/depressurization rates, ventilation rates, and the conditions under which those rates are to be maintained

(d) requirements affecting the amount of stored gas reserves

(e) number of breathing gas outlets and their characteristics

(f) temperature and humidity control requirements, if any

(g) fire-suppression requirements

(h) minimum and maximum operating temperatures

(i) type(s) of breathing gas delivery systems

(j) pressurization gas (air or oxygen)

(k) the edition(s) of other codes and/or standards used in the development of the User's Design Specification

5-1.3 Documentation

(a) PVHO documentation shall be in accordance with para. 1-7.9 and the requirements of other codes and standards as required.

(b) Viewport (window) documentation shall be in accordance with Section 2.

(c) All documentation should be retained by the user for the life of the PVHO. If the PVHO is transferred to a new user, all documentation should accompany the PVHO.

5-1.4 Viewports (19)

All chambers shall have at least one viewport in each compartment for viewing the chamber interior and its occupants.

5-1.4.1 Monoplace Chambers. Monoplace chambers shall have sufficient visual access to permit the chamber operator to observe at least the patient's head, face, chest, and arms.

5-1.4.2 Multiplace Chambers (Multioccupancy Chambers). Each multiplace chamber compartment shall have at least one viewport positioned to support visual communication between one or more persons located inside and one or more persons located outside the compartment. Additional methods [e.g., closed circuit televisions (CCTVs)] may be used to enhance viewing of the interior of each chamber, compartment, and occupants by the operator. CCTV systems shall have sufficient backup power for emergency situations.

5-1.5 Quick-Actuating Closures

Quick-actuating closures that have the potential to be opened while pressurized, such as most medical lock outer doors, shall be designed in accordance with the requirements for quick-acting closures contained in ASME BPVC, Section VIII, Division 1, UG-35.

5-1.6 Personnel Entry Lock

Chambers intended for medical treatment at 3 ATA or less that do not normally incur a decompression obligation for the patients shall not be required to have a personnel lock.

5-1.7 Penetrations

Additional penetrations to provide for access for sensor leads, etc., shall be provided as required by the User's Design Specification.

5-1.8 Personnel Egress

Consideration shall be given to the size and configuration of doorways and/or hatches for safe access and egress of personnel and patients.

ASMENORMDOC.COM : Click to view the full PDF of ASME PVHO-1 2019

(19) **5-1.9 Medical-Use PVHO Certifications**

The piping systems for PVHOs intended for use as medical devices, designed and manufactured according to the manufacturer's standard commercial design, shall comply with the U.S. Food and Drug Administration (FDA) Design Control Requirements (C.F.R.) Part 820, Quality System Regulations. Standard products meeting the requirements of the FDA are exempt from the requirements stated in paras. 4-1.2.1 through 4-1.2.3.

(19) **5-2 PVHO SYSTEM DESIGN**

System design shall be such that pressurization/depressurization rates, gas composition limits, contaminant control, ventilation, fire-suppression system performance, and heating and cooling requirements can be maintained in accordance with the User's Design Specification and other applicable codes and standards. (Refer to NFPA 99, Health Care Facilities, latest edition, relevant chapter covering hyperbaric facilities for guidance.)

5-3 GAS SYSTEMS

5-3.1 Gas Storage Requirements

Storage for medical treatment systems vary in scope and detail depending on the type of system and the number of occupants; therefore, when establishing the design specifications for the gas systems, the designer shall consider the specific requirements of the installation and Section 4.

(19) **5-3.2 Breathing Devices**

The minimum flow rates sufficient to ensure patient comfort and safety shall be identified in the User's Design Specification. (Refer to NFPA 99, Health Care Facilities, latest edition, relevant chapter covering hyperbaric facilities for guidance.)

Supply systems for patient hoods shall have the capability of supplying a minimum flow of oxygen of 40 L/min at chamber design conditions simultaneously to each hood.

5-3.3 Breathing Gas Outlets

Each PVHO treatment compartment, other than a monoplace chamber, shall be equipped with fittings for breathing mask, patient hood, or endotracheal device corresponding to the number of occupants.

5-4 CONTROL SYSTEMS AND INSTRUMENTATION

5-4.1 Controls Location

Primary operation shall be external to the chamber. If remote or automated controls are used, manual overrides shall be provided and easily accessible.

5-4.2 Communications

Control console or stations shall be equipped to provide communication with each compartment.

5-5 ENVIRONMENTAL SYSTEMS

5-5.1 Environmental Conditions

All systems and components shall be capable of operating satisfactorily and safely in accordance with their specifications at the environmental conditions stated. The designer shall give specific consideration to the comfort of the patients in deciding whether environmental control of the chamber atmosphere is required or whether ambient conditions will suffice.

5-5.2 Temperature

Patient comfort shall be maintained by supplemental heating or cooling, as required.

5-5.2.1 Multiplace Chambers. If multiplace chambers are equipped with heating or cooling systems, provision shall be made to shut off the heating or cooling system in the event of malfunction.

5-5.2.2 Monoplace Chambers. Temperature control for the chamber area shall be considered for monoplace chambers.

5-5.3 Humidity

A specific system for the control of humidity is not mandatory if other methods such as ventilation or circulation are sufficient to maintain patient comfort in accordance with the User's Design Specification.

5-5.4 Contaminants

Sources of volatile, toxic, or potentially toxic contamination shall be minimized to the extent practical. Possible sources of contamination include off-gassing of nonmetallic materials.

5-5.5 Lighting

There shall be sufficient lighting in or around a chamber to see the patient(s), the chamber control console, and chamber support equipment systems.

5-5.5.1 External Lighting. External lighting fixtures shall not come into contact with or be allowed to overheat the surface of a window in excess of its maximum design temperature in accordance with Section 2.

5-5.5.2 Emergency Lighting. Emergency lighting shall be provided.

ASMENORMDOC.COM : Click to view the full PDF of ASME PVHO-1 2019

5-5.6 External Heat Sources

External heat sources in addition to lighting fixtures shall not come in contact with or otherwise heat the surface of a window in excess of its maximum design temperature.

5-5.7 Access to Emergency Equipment

No permanent seat or stretcher shall block the aisles, hatches, doors, medical locks, handheld hoses, fire-suppression controls, or any emergency equipment.

5-5.8 Suction Systems

All systems for use inside a chamber shall have a trap in-line to keep waste materials out of the piping system.

If a suction system uses pressure differential for the vacuum while at depth, there shall be a vacuum source for use on the surface.

5-5.9 Accidental Depressurization

(a) If a sink, water supply, or drainage system is used, provisions shall be made to prevent unintentional depressurization of the system.

(b) Any toilet that is plumbed to discharge to the outside of the chamber shall have a holding tank and a dual-valve safety interlock system.

(c) Any toilet that flushes to the outside of the chamber shall be designed to preclude the possibility that a seal might be created between the seat and the person using the toilet.

ASMENORMDOC.COM : Click to view the full PDF of ASME PVHO-1 2019

(19)

Section 6
Diving Systems

6-1 GENERAL

6-1.1 Scope

6-1.1.1 PVHOs. This Section, along with Sections 1 through 4, provides the requirements for the design, fabrication, assembly, inspection, testing, certification, and stamping of PVHOs used in diving systems. This includes but is not limited to

(a) deck decompression chambers
(b) diving bells
(c) transfer locks
(d) saturation living chambers
(e) rescue chambers
(f) hyperbaric evacuation systems
(g) diving subsystems/components
(h) diver lockout chambers
(i) hyperbaric stretchers

6-1.1.2 Components. The scope of this Section includes, but is not limited to, the following components:

(a) doors
(b) hatches
(c) penetrations and fittings
(d) medical and service locks
(e) quick-opening closures
(f) viewports
(g) light-transmitting devices
(h) electrical penetrators
(i) trunks and tunnels

6-1.2 User's Design Specification

A User's Design Specification, as described in subsection 1-4, shall be written for the PVHO diving system. The Specification shall set forth the requirements as to the intended use of the PVHO or component and the operating and environmental conditions in such detail as to constitute an adequate basis for design, fabrication, inspection, and testing of the PVHO or component necessary to comply with this Standard. The User's Design Specification shall include

(a) number of intended occupants
(b) maximum operating pressure/depth
(c) required pressurization and depressurization rates, ventilation rates, and conditions under which rates are to be maintained
(d) intended operational environment
(e) maximum number of pressure cycles
(f) maximum/minimum internal/external pressures
(g) operating temperatures
(h) storage conditions/temperatures
(i) number, size, and type of penetrators, doors, hatches, windows, and service locks
(j) corrosion allowance
(k) environmental requirements
(l) special design considerations applicable to normal and emergency service, e.g., requirements for the sizing of the diver lockout hatch [i.e., the diver dress and potential underwater breathing apparatus (UBA) to be used]
(m) fire suppression

6-1.3 Design Certification

Conformance of the completed PVHO to the requirements of this Standard and the User's Design Specification shall be established by the following procedures:

(a) A competent Professional Engineer, registered in one or more of the U.S. states or provinces of Canada, or the equivalent in other countries, and experienced in the design of PVHOs, shall certify that the PVHO or component was designed or completely reviewed by the engineer or under the engineer's direct supervision, and that to the best of their knowledge, it meets the requirements of the User's Design Specification and complies with this Standard.

(b) Alternatively, the PVHO or component shall be reviewed by an authorized government agency or an independent classification society competent in pressure vessels for human occupancy, and such organization shall provide a certification that the PVHO or component complies with this Standard and the User's Design Specification.

6-1.4 Documentation

The user shall be provided with the following data and documentation:

(a) User's Design Specification
(b) PVHO and/or PVHO component certification
(c) PVHO window certificates in accordance with Section 2
(d) viewport and window drawings
(e) applicable ASME data reports and partial data reports
(f) any classification society certifications

ASMENORMDOC.COM : Click to view the full PDF of ASME PVHO-1 2019

(g) vessel drawings necessary for the maintenance, inspection, and repair of the PVHO

6-1.5 Useful References

The designer should be familiar with the references contained in Nonmandatory Appendix F.

6-2 DESIGN

6-2.1 General

PVHOs, their components, and attachments shall be designed for the environmental conditions in which they are intended to operate. For example, particular attention shall be given to the corrosive effect of salt water, sea, air, and chlorinated water, as applicable.

The PVHO shall be designed, fabricated, assembled, inspected, tested, and certified in accordance with Section 1. The design should facilitate the ability to conduct planned maintenance and inspections.

The design of the diving system shall incorporate appropriate backup systems and equipment to ensure the safety of both the occupants and the operating personnel in the event of any single failure.

6-2.2 Design Loads

The designer shall address in the design all forces acting on the PVHO. These may include but are not limited to

(a) internal and external pressure forces
(b) dynamic loads
(c) local loads including impact, lifting force localized reactions, and discontinuities
(d) loads due to expansion and contraction
(e) loads due to weight of contents, or equipment mounting
(f) transportation loads
(g) test loading and configurations
(h) entrapped water loads
(i) loads due to lifting, handling, or mounting
(j) loads due to external connections (e.g., bell or escape tunnel clamped to a chamber, piping connections, etc.)
(k) wave loads
(l) operation and emergency loads
(m) vibration loads
(n) seismic loads

The design shall consider the external forces transmitted to the PVHO.

For marine design purposes, these forces shall be at least 2.0*g* vertical, 1.0*g* transverse, and 1.0*g* longitudinal, unless otherwise determined, all acting simultaneously while the chamber is pressurized. Consideration shall be given to inclinations as follows:

Design	Roll, deg	List, deg	Pitch, deg	Trim, deg
Mounted on a conventional ship or construction barge	±22.5	±15	±10	±5
Mounted on a semisubmersible	...	±15	...	±15
Components in a bell	±45	±22.5	...	...

6-2.3 Environmental Requirements

Pressure vessels used in diving are exposed to conditions needing special consideration. These conditions may include

(a) weather
(b) frequent handling
(c) weight and buoyancy
(d) static/dynamic loads
(e) exposure to marine conditions
(f) corrosion
(g) exposure to temperature extremes

6-2.4 Corrosion

The design shall consider corrosion allowance and/or mitigating process based on the operating environment as defined in the User's Design Specification. Areas of pressure vessels subject to corrosion shall be protected by an appropriate means.

6-2.5 External Pressure Rating

Components of PVHO pressure boundaries subject to external pressure shall be designed in accordance with Section 1.

6-2.6 Impact Protection

The designer shall provide protection to the pressure hull of the PVHO and critical components (e.g., viewports and emergency gas supplies) that may be subject to impact during operations and transportation. This protection should also be designed to minimize the risk of fouling or entanglement.

6-2.7 Buoyancy

Should the User's Design Specification require a positively buoyant bell, any ballast control mechanism shall be designed to prevent accidental activation or inadvertent release.

6-2.8 Occupant Requirements

6-2.8.1 All PVHOs shall have an entry lock or the capability of being mated to another PVHO as a method for access to the occupants while under pressure.

ASMENORMDOC.COM : Click to view the full PDF of ASME PVHO-1 2019

6-2.8.2 The designer shall apply principles of ergonomics to the arrangement of the PVHO. The recommended minimum internal dimensions and volumes are as follows:

(a) saturation living chambers — sized to allow occupants to stand and lie down, move in and out of the chamber, and permit meal services while saturated

(b) transfer lock (TUP) — 105 ft^3 (3.0 m^3) floodable volume

(c) diving bell (SDC) for

(1) two occupants — 105 ft^3 (3.0 m^3) floodable volume

(2) three occupants — 160 ft^3 (4.5 m^3) floodable volume

(d) deck decompression/recompression chamber (DDC) — sufficient to accommodate a diver and an attendant

6-2.8.3 PVHOs intended for use as living chambers for longer than 24 hr in other than emergency situations shall have, or be capable of connecting to another PVHO equipped with, the following for the intended number of occupants:

(a) the ability to monitor and control the oxygen level, carbon dioxide level, ambient temperature, and primary life-support parameters

(b) one bunk per occupant

(c) potable water

(d) toilet

(e) shower

(f) medical or service lock

(g) built-in breathing system (BIBS) with a breathing gas

6-2.8.4 PVHOs shall be designed to allow access to internal bilge/void areas for cleaning and inspection.

6-2.9 Lubricants and Sealants

Lubricants and sealants selected for use in PVHOs shall be suitable for the hyperbaric environment in which they operate. The designer shall address

(a) flammability

(b) toxicity

(c) compatibility with breathing gases

(d) odor

(e) skin irritation

(f) compatibility to materials

6-2.10 Material Toxicity (Including Paints)

Materials and equipment inside manned compartments shall not give off noxious or toxic vapors within the limits of anticipated environments. Where compliance with this requirement has not been demonstrated through satisfactory service experience, an analysis or testing program shall be performed.

6-2.11 Emergency Recovery of Diving Bells

6-2.11.1 General. This subsection addresses the design, construction, and testing of emergency recovery equipment on diving bells.

6-2.11.2 Design. All diving bells shall be equipped with a secondary lifting point, meeting the same requirements as the primary lifting point, to facilitate the attachment of an emergency lifting wire.

Consideration shall be given to the clearance necessary between the bottom door and the seabed to ensure safe ingress or egress of divers under emergency conditions.

Diving bells shall be outfitted with a means of emergency recovery depending on whether they have been designed to remain negatively buoyant or become positively buoyant.

6-2.11.3 Negative Buoyancy Diving Bells. Guide wires and clump weight(s) shall be designed to permit the diving bell to be recovered from the maximum operating depth when loaded to the maximum service weight, with trunk(s) flooded, and the maximum deployable length of umbilical and lifting wire attached to the bell and severed at the surface.

6-2.11.4 Positive Buoyancy Diving Bells. The diving bell shall be equipped with devices for releasing the main lifting wire, guide wires, and the umbilical and ballast weight(s). The operation of each emergency release device shall require at least two mutually independent actions for release.

Release devices shall be designed to prevent accidental actuation. Consideration shall be given to environmental factors, e.g., exposure to ambient temperatures and pressures. The design should facilitate regular testing and maintenance.

After the release of the main bell wire, guide wires, and umbilical and ballast weight(s), the diving bell shall exhibit positive buoyancy when loaded to the maximum service weight and with trunk(s) flooded. Under these circumstances, the diving bell shall have sufficient stability to remain upright. Consideration shall be given during the risk assessment, as required in subsection 1-11, to the ascent rate and impact on surface vessels and structures.

6-2.11.5 Functional Testing. Functional testing shall be carried out to demonstrate and document proper operation of all emergency recovery functions.

6-3 PRESSURE BOUNDARY

6-3.1 Personnel Access Doors/Hatches

The design of doors and hatches shall

(a) be in accordance with the requirements of Section 1.

ASMENORMDOC.COM : Click to view the full PDF of ASME PVHO-1 2019

(b) have a nominal diameter of at least 24 in. (610 mm) if used as a normal means of personnel ingress or egress.

(c) be provided on each side with a means of opening and closing hatches or doors (i.e., handle).

(d) be operable from both sides of the door or hatch.

(e) be such that reverse overpressurization of the door does not cause catastrophic failure of the locking dog or other similar devices if used.

(f) be such that corrosion or binding due to friction shall be eliminated as far as practical.

(g) be such that opening may not take place when the pressure is not equal on both sides.

(h) take into account dynamic movements and loads on door and hatch operating and hinge mechanisms to verify the structural adequacy and seal tolerance.

(i) provide a means for securing any hinged door or hatch in the fully open position.

(j) preclude unintentional operation of the door or hatch when springs or mechanisms are used to assist in the operation.

(k) ensure that if fluids are used in door or hatch assist mechanisms, they are compatible with the environment.

(l) have a safety interlock system if pressure acts to open or unseat the door or hatch. The safety interlock system shall not permit pressurization of the door or hatch unless the door/hatch closure is fully engaged.

SDC (diving bell) lockout hatches shall be sized to facilitate recovery of a fully dressed and unconscious diver. Larger openings may be necessary to accommodate divers with emergency life-support systems activated. A minimum 28-in. (711-mm) diameter clear opening is required.

6-3.2 Medical/Service Locks

Medical/service locks shall

(a) be designed, fabricated, inspected, certified, and tested in conformance with this Standard

(b) be sized for the purpose intended (e.g., passing food, medicine, emergency supplies, scrubber canisters, diving helmets, and equipment)

(c) have an external means for monitoring, venting, and equalizing pressure to the compartment being serviced or to atmosphere

(d) be provided with a safety interlock to prevent inadvertent opening of the door, cover, or hatch when the pressure in the medical/service lock acts to open the door, cover, or hatch

6-3.3 Closures

Clamps and closure devices used to couple PVHOs shall

(a) be designed, fabricated, inspected, tested, and certified in accordance with Section 1

(b) be designed for vessel dynamic movements and include sufficient supports to carry the weight of the clamps while in the open position

(c) be fitted as per requirements in para. 6-3.4 where trunks or tunnels are created by use of clamps and closures

(d) be provided with a positive safety interlock in accordance with ASME BPVC, Section VIII

(e) incorporate a manual system to allow clamp opening on failure of the primary operating system if the primary system is a powered system

6-3.4 Quick-Acting Closures for Diving Bells and Hyperbaric Evacuation Systems

6-3.4.1 General. These requirements are applicable to quick-acting closures that facilitate the connection and disconnection of diving bells and evacuation systems to and from a main diving system for the purpose of diver transfer under pressure.

6-3.4.2 Design

(a) The quick-acting closure shall be designed to connect and disconnect the diving bell and emergency evacuation system under all operational conditions as detailed in the User's Design Specification.

(b) The quick-acting closure shall be provided with a safety interlock to prevent accidental opening in accordance with ASME BPVC, Section VIII, Division 1, UG-35.2.

(c) The quick-acting closure safety interlock shall also prevent pressurization until the closure mechanism is fully engaged.

(d) When power-actuating systems are used for mating operations, a manual backup actuation system shall be provided for use in the event of a system power or switching failure. The manual backup system shall require two mutually independent actions for operation.

(e) An interlock system with visual indicator shall be provided to prevent operation of the handling system while mated. The interlock system shall prevent activation of the handling system until the quick-acting closure is in the fully open position.

6-3.5 Trunks and Tunnels

Trunks and tunnels incorporated in or created by the coupling of PVHOs shall

(a) be designed, fabricated, inspected, tested, and certified in accordance with Section 1

(b) have a minimum internal diameter of 24 in. (610 mm)

(c) have an external means for monitoring, venting, and equalizing pressure when connected to an adjacent compartment or atmospheric pressure

(d) provide hand- and/or footholds in trunks or tunnels exceeding 36 in. (914 mm) in length

ASMENORMDOC.COM : Click to view the full PDF of ASME PVHO-1 2019

6-3.6 Viewports

All viewports shall meet the requirements of Section 2. Viewports shall be provided with protection suitable for the use intended.

6-3.7 Lighting Devices

Interior lighting devices shall be rated for the PVHO's MAWP. Exterior light-transmitting devices that act as part of the PVHO pressure boundary shall meet the requirements of Section 2.

6-3.8 Service Penetrators

Service penetrators shall

(a) be equipped with valves on both sides of the penetrator and be installed as close to the PVHO hull penetration as possible

(b) have a MAWP equal to or greater than that of the PVHO

(c) be able to withstand maximum internal and external pressures

(d) be compatible with the intended service

(e) be suitable for the effects of chemical reactions

(f) be suitable for the effects of temperature

(g) be suitable for the effects of corrosion

(h) have suitable protection to areas subject to impacts during operation or transportation

(i) be accessible for inspection

6-3.9 Electrical Penetrators

Electrical service and instrumentation penetrators shall

(a) be designed for the service intended

(b) be constructed from materials suitable for the service intended, including the effects of corrosion

(c) have a design pressure and temperature rating equal to or greater than the PVHO MAWP and temperature

(d) be gas-/watertight even in the event of damage to the connecting cable

(e) be designed for both internal and external pressure when used in PVHOs that are rated for internal and external pressure (e.g., diving bell)

6-3.10 Fiber-Optic Penetrators

Fiber-optic penetrators shall meet the mechanical criteria as described for electrical penetrators.

6-4 SYSTEMS

6-4.1 Life-Support Systems

6-4.1.1 General. All PVHOs shall have

(a) sufficient gas supply for normal and emergency requirements

(b) the ability to monitor and control the depth

(c) the ability to maintain a life-sustaining breathable environment

(d) the ability to monitor oxygen and carbon-dioxide levels of the breathing environment if the PVHO's life-sustaining breathable environment is maintained by carbon dioxide scrubbing.

6-4.1.2 Unventilated PVHOs. Unventilated PVHOs shall have a means of injecting oxygen, removing carbon dioxide, and controlling both humidity and temperature levels for the purpose of maintaining a life-sustaining environment.

6-4.1.3 Oxygen Supply

(a) If the User's Design Specification requires the injection of oxygen into a chamber, a means for the controlled injection of oxygen shall be provided.

(b) The system shall be designed to ensure safe and reliable operation under all normal and emergency operating and environmental conditions, as defined in the User's Design Specification.

(c) The system shall be designed to ensure the volume of oxygen injected into any PVHO during an injection cycle will not increase the partial pressure of oxygen (PPO_2) in that PVHO beyond the limits defined in the exposure tables employed.

(d) Visual indicators shall be provided and shall clearly display the functional status of the system. Audio alarms shall be provided to alert personnel in the event of a system or a parameter exceeding allowable limits. Both audio and visual indicators shall be capable of operating under the normal and emergency conditions, as defined in the User's Design Specification. In the case of internally mounted makeup systems operated by the chamber occupants, with a predetermined injection volume per cycle, only a visual indicator is required.

(e) A means of monitoring the PPO_2 shall be provided for each occupied compartment of every PVHO forming part of the system, as defined in the User's Design Specification.

6-4.1.4 Carbon Dioxide Removal. For unventilated PVHOs, each occupied compartment shall be provided with suitable equipment for carbon dioxide removal. This equipment shall comply with the following:

(a) The carbon dioxide removal equipment shall be designed to ensure safe and reliable operation under all normal and emergency operating and environmental conditions, as defined in the User's Design Specification.

(b) The carbon dioxide removal equipment shall be capable of maintaining the partial pressure of carbon dioxide ($PPCO_2$) at or below the following limits:

(1) 0.005 atmosphere absolute (ata) under normal operating conditions

(2) 0.015 ata under emergency operating conditions

(c) The carbon dioxide removal equipment shall be designed for the carbon dioxide production rate(s) specified in the User's Design Specification, which shall not be lower than 0.115 lb (0.0523 kg) per hour per person.

ASMENORMDOC.COM Click to view the full PDF of ASME PVHO-1 2019

(d) The carbon dioxide removal equipment shall be provided with full redundancy.

(e) Materials used for the carbon dioxide removal equipment shall be compatible with the carbon dioxide removal agent and shall be corrosion resistant. In addition, the toxicity of these materials shall be considered.

(f) Canisters, panels, or curtains used for holding the carbon dioxide removal agent shall be designed for ease of replacement, without the need for any special tools.

(g) Where solid adsorbents are used as the carbon dioxide removal agent, they shall be the low-dusting type. Solid adsorbents shall be stored in containers free of moisture.

(h) Where lithium hydroxide (LiOH) is used as the carbon dioxide removal agent, the canisters, panels, or curtains holding the LiOH shall be designed to prevent LiOH dust from escaping, or LiOH drippings from falling on personnel or equipment. These canisters, panels, or curtains shall be replaceable as complete units.

(i) Where required by the User's Design Specification, adequate heating shall be provided to maintain the temperature of the carbon dioxide removal agent above the minimum limits specified by the manufacturer of the removal agent.

6-4.1.5 Gas Storage Cylinders and Volume Tanks

6-4.1.5.1 Gas Storage Cylinders. Individual cylinders or multiple cylinders grouped together by means of a manifold to form a cylinder bank shall be provided with

(a) a readily accessible isolation valve to stop gas flow to the system. This valve shall be rated for the maximum allowable working pressure (MAWP) of the cylinder.

(b) a protective device to relieve excess pressure. The relieving device shall meet the requirements of the applicable cylinder standard.

(c) clear labeling as to content in accordance with a recognized national or international standard.

(d) a means of eliminating moisture when used for storing reclaimed gases.

(e) moisture separators and filters that may be used to ensure no moisture enters the system.

(f) a means of monitoring internal pressure.

6-4.1.5.2 Volume Tanks. Each volume tank shall be provided with

(a) a readily accessible isolation valve to stop gas flow to the system. This valve shall be rated for the MAWP of the volume tank.

(b) a means of periodically draining moisture from the bottom of the tank.

(c) a means of relieving excess pressure.

(d) a method for monitoring internal pressure.

6-4.1.6 Emergency Breathing Systems (EBS)

6-4.1.6.1 EBS Internal to PVHOs

(a) An emergency breathing system shall be included that provides a life-sustaining breathable medium for every PVHO occupant.

(b) The capacity of the EBS shall be sufficient for 150% of the time normally required to return every PVHO occupant to a breathable life-sustaining environment, based on the operational use cases established in the User's Design Specification, unless otherwise approved by the jurisdictional authority on the basis of special operating conditions. Returning to a breathable life-sustaining environment typically entails either returning to a surface ambient environment or correcting conditions to reestablish the primary breathable life-sustaining environment.

(c) The emergency breathing gas shall be supplied to the PVHO occupant from either an emergency surface supply or an onboard emergency life-support system, depending on the application of the PVHO.

(d) The EBS shall be independent from the primary breathing system. The emergency breathing gas shall be compatible with the primary breathing gas and operational depths/pressures set forth in the User's Design Specification. If emergency breathing gas is supplied from the surface using an air compressor, the quality of the air shall be ANSI/CGA G-7.1 Grade E breathing air or equivalent. Where open-circuit systems are used and means to exhaust the PVHO compartment are not present, the effects of increased compartment pressure shall be considered.

(e) Emergency breathing gas is to be supplied to either full-face masks or oral–nasal masks using a built-in breathing system (BIBS), self-contained rebreathers, or other means suitable for supporting life in a contaminated environment, including the by-products of a fire. One emergency breathing mask or rebreather per occupant shall be provided in each PVHO compartment. In addition, one reserve breathing mask or rebreather shall be readily available in each PVHO compartment. A minimum of two emergency breathing masks shall be provided in each PVHO lock.

(f) Emergency breathing masks or rebreathers shall be stowed within the PVHO in a manner that allows each occupant to reach and don them quickly.

6-4.1.6.2 EBS for Control Stations External to the PVHO

(a) Enclosed dive/sat control stations and local control stations for handling systems shall be provided with an EBS that accommodates all essential personnel required to perform emergency operations as specified in the User's Design Specification.

(b) Emergency breathing gas shall be supplied to full-face masks.

ASMENORMDOC.COM : Click to view the full PDF of ASME PVHO-1 2019

(c) Emergency breathing devices shall be compatible with communication equipment.

(d) The EBS shall be capable of functioning for a sufficient duration, based on the operational use cases as set forth in the User's Design Specification, to enable operators to perform their duties in nonbreathable environments.

6-4.1.7 Life-Support Monitoring

(a) General. For ventilated and unventilated PVHOs, each occupied compartment, except ventilated locks designed for the transfer of personnel, shall be provided with suitable instrumentation for continuously monitoring the oxygen and carbon dioxide concentrations in the compartment atmosphere.

(b) Unventilated PVHOs. In addition to (a), unventilated PVHOs shall comply with the following:

(1) Instrumentation for monitoring the oxygen and carbon dioxide concentrations shall be provided with audiovisual alarms to alert personnel when the monitored parameters are outside their allowable limits.

(2) Where means are provided to control the temperature and humidity of the occupied compartment, instrumentation shall also be provided to monitor the temperature and relative humidity of the compartment.

(3) Life-support monitoring instrumentation shall be provided in duplicate or an alternative means of monitoring shall be provided.

(4) Electrically operated life-support monitoring instrumentation that is powered externally (i.e., having no self-contained batteries) shall be provided with an uninterruptible power supply (UPS) for maintaining continuity of power in the event of primary power supply failure.

(5) Where applicable, the design of the life-support monitoring instrumentation shall permit calibration.

6-4.2 Sanitary Systems

6-4.2.1 All diving PVHO systems designed for extended occupancy shall be outfitted with the following system capable of supporting the sanitary needs of the occupants:

(a) Chambers designed for occupancy not exceeding 24 hr shall have provisions for handling sanitary waste and handwashing facilities.

(b) Chambers designed for occupancy in excess of 24 hr, except those used exclusively for hyperbaric rescue, shall incorporate a flushing toilet, handwashing sink, and shower with running water and drain facilities.

6-4.2.2 The flushing toilet shall be provided with the following:

(a) a source of water capable of being delivered at a pressure adequate to ensure sufficient flow into the chamber at its maximum operating pressure

(b) interlock(s) to prevent actuation while the occupant is seated

(c) an actuation that shall require at least two distinct and separate sequential actions by the occupant

(d) a flushing system that shall be designed to limit the volume of gas exhausted with each actuation

(e) an effluent drain that shall be routed to an external holding tank

(f) a toilet seat that must include a standoff to ensure that a complete seal between the toilet bowl and user cannot be achieved

6-4.2.3 The handwashing sink and shower system shall be provided with the following:

(a) a source of water capable of being delivered at a pressure adequate to ensure sufficient flow into the chamber at its maximum working pressure

(b) a water drain that shall be routed to an external holding tank

(c) a drain that may be manual or automatic

(d) a drain system that shall include a standoff that ensures that a complete seal between the drain and user cannot occur

6-4.2.4 The holding tank shall be provided with the following:

(a) pilot and vent valves to ensure it cannot exceed chamber pressure during system actuation or chamber decompression.

(b) a pressure gauge indicating tank pressure.

(c) a level-indicating device and normally closed fail-to-safety actuating drain valve.

(d) a drain line connecting the holding tank with the appropriate system on the vessel or land-based facility sewerage system. This external drain shall be designed to prevent impermissible pressurization of the external drainage system.

6-4.3 Electrical Systems

6-4.3.1 General. Electrical systems, including power supply arrangements, shall be designed for the environment in which they will operate in order to minimize the risk of fires, explosions, electrical shocks, emission of toxic gases, and galvanic action on the PVHOs.

For electrical equipment exposed to diving conditions, the designer shall consider pressure and pressure cycling, humidity, moisture, temperature, oxygen concentration, hydrogen concentration, and cable flammability.

Electrical systems installed within PVHOs shall be limited to those necessary for the safe operation of the PVHO and the monitoring of its occupants.

Measures shall be taken to minimize any electrical hazards to divers and personnel in the diving system.

6-4.3.2 Power Supplies

6-4.3.2.1 General. Diving systems shall be provided with independent main and emergency sources of electrical power.

ASMENORMDOC.COM : Click to view the full PDF of ASME PVHO-1 2019

6-4.3.2.2 Main Power. The main source of electrical power shall have sufficient capacity for all anticipated diving operations.

6-4.3.2.3 Emergency Power. The emergency source of power shall have sufficient capacity to supply the applicable emergency electrical loads for the safe termination of the diving operations. The emergency source of electrical power shall be located so as to ensure its functioning in the event of failure of the main source of power.

6-4.3.2.4 Reserve Power. In addition to the main and emergency sources of power, diving bells/personnel transfer capsules and hyperbaric rescue chambers/lifeboats shall be provided with a suitable onboard reserve source of power. This onboard source of power shall be capable of feeding the applicable emergency equipment, e.g., the emergency life-support equipment, communication equipment, and internal lighting. For diving bells/personnel transfer capsules, the onboard source of power shall have sufficient capacity to supply power for at least 24 hr. For hyperbaric rescue chambers/lifeboats, the onboard source of power shall have sufficient capacity to supply power for at least 72 hr.

6-4.3.3 Distribution

6-4.3.3.1 General. The pressure boundary of PVHOs shall not be used as a current-carrying conductor. All electrical power distribution systems shall be ungrounded and insulated to minimize the occurrence of faults and stray currents that may create galvanic corrosion.

6-4.3.3.2 Voltage. The maximum voltages for PVHOs shall not exceed those specified below.

Application	Maximum Voltage	Nominal Voltage
AC with circuit protection device	250	220
AC without circuit protection device	7.5	6
DC with circuit protection device	285	250
DC without circuit protection device	30	24

6-4.3.3.3 Ground Detectors. Ground detectors or interrupters shall be provided for systems with a line voltage above 7.5 V AC or 30 V DC.

6-4.3.3.4 Cables and Wiring. Cables and wiring shall meet a recognized national or international electrical standard (such as IEC standards or IEEE 45). They shall be flame retardant and shall comply with the flammability criteria of a recognized national or international standard. Cables and wiring within the pressure boundary of PVHOs shall be of the low-smoke, low/zero-halogen type.

6-4.3.3.5 Cable Separation. Cables and wiring of circuits supplied by different voltages and by main and emergency circuits shall be effectively separated from each other.

6-4.3.3.6 Power Supply Conductors. All power supply conductors from the same main or emergency power source shall be spaced sufficiently to prevent damaging currents and shall not pass through the same penetrator or connection in a pressure boundary unless

(a) it can be shown that there is little risk of short-circuiting or tracking between the conductors and

(b) the voltages and currents are of such an order that, in the event of failure in any way of the conductor insulation, the penetrating device's gas and watertight integrity are maintained

6-4.3.3.7 Cables Subjected to External Pressure. Materials for uncompensated cable and wiring insulation subjected to external pressure shall be capable of withstanding a hydrostatic pressure of 1.5 times the design pressure of the diving system. Submerged cable assemblies shall be tested by the continuous application of an alternating current voltage of at least 500 V for 1 min. This shall be performed with the jacket exposed to seawater. The quality of the assembly should be such that the leakage current will neither prevent proper operation of the systems nor expose personnel to unsafe voltages.

6-4.3.4 Circuit Protection

6-4.3.4.1 Circuit Protection Devices. Power cables shall be protected from overloads and short circuits by protective devices that isolate all conductors in the overloaded circuit. Circuit protection devices shall meet a recognized national or international electrical standard. Fuses and thermal circuit breakers are not permitted in a helium–oxygen environment.

6-4.3.4.2 Pressure Boundary Power Penetrations. All power cables passing through the pressure boundaries of PVHOs shall be adequately protected by circuit breakers or fuses against overload and short circuits. The circuit breakers or fuses shall be located on the power-source side of the pressure boundaries and shall have the ability to open the circuits quickly to prevent damage to the gas-/watertight integrity of the electrical penetrators.

6-4.3.5 Battery Compartments

6-4.3.5.1 Sources of Ignition. Design and procedural precautions shall be taken to eliminate all potential sources of ignition within battery compartments.

6-4.3.5.2 Hydrogen Levels. For batteries capable of generating hydrogen gas, design features shall be in place to avoid the potential hazards arising from hydrogen accumulation. Protective devices located in battery

ASMENORMDOC.COM : Click to view the full PDF of ASME PVHO-1 2019

compartments containing these batteries shall not provide an ignition source for the hydrogen gas.

6-4.3.5.3 Electrical Equipment. All electrical equipment in battery compartments containing batteries capable of generating hydrogen gas shall be of the explosion-proof or intrinsically safe type.

6-4.4 Lighting Systems

Sufficient lighting shall be provided for the safe operation of the PVHO.

6-4.5 Communication Systems

6-4.5.1 All diving PVHOs shall be equipped with communications between the PVHO operator(s) and internal occupants. Communication systems shall consist of both a primary and a secondary system. The secondary system shall consist of a sound-powered telephone or other methods that operate in the event of power loss. Communication systems shall be included in each occupiable lock of the PVHO. In the event that the control operator or the occupant(s) does not have direct visual contact, the secondary system shall be equipped with a signal device, e.g., an audible annunciator, to alert the operator or the occupant(s).

6-4.5.2 When helium mixtures are used in the breathing medium, a helium unscrambler shall be used.

6-4.5.3 Diving bells shall be equipped with a through-water communications system rated for the maximum operational distance from the PVHO operator(s).

6-4.6 Fire Protection and Detection Systems

6-4.6.1 Fire Safety. The construction of the PVHO shall be such as to minimize hazards of smoke and fire. Systems shall be designed and equipped to avoid sources of ignition and minimize flammable materials. Toxicity of combustion products and flame-spread characteristics shall be considered in material selection.

6-4.6.2 Fire Suppression. The system designer shall address fire suppression. A formal risk analysis shall be conducted to establish the performance requirements for the system. The designer may elect to provide a passive-prevention or an active-suppression system.

Active-suppression systems shall be tested for operation under the full range of required suppression system pressures. Extinguishing systems shall be compatible with life-support requirements of the PVHO. Carbon dioxide and dry powder are not suitable for use as extinguishing agents in enclosed environments.

6-5 HANDLING SYSTEMS

6-5.1 General

This subsection provides the additional requirements for the handling, deployment, and emergency recovery of diving bells, which are also known as personnel transfer capsules (PTCs).

Handling systems for diving bells shall comply with at least one of the codes and standards required by an International Association of Classification Societies (IACS) member classification society and the applicable organization(s) having regulatory and jurisdictional authority.

Ropes and loose gear items (blocks, sheaves, shackles, etc.) used on handling systems shall comply with the codes and standards recognized by the applicable organization(s) having regulatory and/or jurisdictional authority.

6-5.2 Design

Diving systems shall be provided with a handling system as defined. The handling system shall be capable of safely moving the diving bell and its occupants (divers) between the work location and surface compression chamber(s).

The handling system shall comply with the handling system rated load/safe working load requirements as defined and meet the performance criteria given in the User's Design Specification.

The handling system shall comply with the handling system design load requirements as defined in para. 6-2.2 and meet the performance criteria given in the User's Design Specification.

For the eventuality of a single component failure in the main handling system, a secondary system shall be provided to enable the divers to be brought back to the surface compression chamber. This secondary system shall be powered independently from the main handling system.

Handling system winches shall be provided with two independent braking mechanisms. The braking mechanisms shall be designed to hold 100% of the design load of the handling system.

Braking mechanisms shall be designed to fail-to-safety and set automatically upon loss of power to the winch.

Lowering of loads shall be controlled by powered drives independent of the braking mechanisms. Powered drives shall be designed to handle 100% of the design load of the handling system.

The handling system shall be provided with the means to stabilize the diving bell and prevent excessive rotation during ascent/descent through the water column. It also shall be provided with the means to prevent the diving bell from contacting the vessel's hull or any elements of the handling system during handling operations between the

ASMENORMDOC.COM : Click to view the full PDF of ASME PVHO-1 2019

surface compression chambers and keel depth of the vessel.

6-5.3 Test and Trials

The fully assembled handling system shall be statically load tested to 100% of the design load of the handling system.

After installation on board the vessel, the handling system shall be functionally tested at the maximum rated speed of the system. Satisfactory operation of the complete handling system, including the powered drives and brakes, shall be demonstrated and shown to meet the requirements of para. 6-4.1.2.

6-6 HYPERBARIC EVACUATION SYSTEMS

6-6.1 General

All diving systems used to support saturation diving operations shall be equipped with a hyperbaric evacuation system (HES) capable of providing a means of evacuation for the maximum number of divers that the diving system is capable of accommodating. As a minimum, the HES is to include a hyperbaric evacuation unit (HEU), its launching system, and a portable life-support package (LSP).

(a) The HEU shall be capable of maintaining the divers at the appropriate pressure, with adequate life support for a minimum of 72 hr.

(b) The HEU shall be capable of operating at the maximum operating pressure of the diving system as set forth in the User's Design Specification in accordance with subsection 1-4.

(c) The HEU shall be readily accessible to all occupants of the saturation diving system. It shall be mated to the diving system by means of trunking and a quick-acting closure in accordance with paras. 6-3.4 and 6-3.5.

(d) A launching system in accordance with para. 6-6.4 shall be provided for each HEU.

(e) A clearly written Hyperbaric Evacuation Plan detailing the procedures required for maintenance, testing, training, and operations prior to, during, and following hyperbaric evacuation shall be provided. This plan should list specific responsibilities for each job title associated with the evacuation. The plan shall also include the operational procedures for the evacuation of divers stored at different pressures.

(f) Following the initial evacuation, the diving system operator shall arrange for transportation of the HEU and its occupants to a designated location (safe haven), where the appropriate facilities shall be available for decompressing the HEU occupants to surface pressure in a safe and controlled manner.

6-6.2 Hyperbaric Evacuation Unit User Requirements

6-6.2.1 There are two common forms of HEUs, as follows:

(a) Hyperbaric Rescue Chamber (HRC). An HRC is a PVHO that has been specifically designed and outfitted with the equipment and life-support systems necessary to evacuate divers from a ship, barge, semisubmersible, or fixed structure, and maintain life-supporting conditions for the maximum number of occupants at the maximum operating pressure of the diving system for a period of not less than 72 hr. An HRC generally does not have onboard propulsion and is typically towed or transported to its safe haven.

(b) Self-Propelled Hyperbaric Lifeboat (SPHL). An SPHL is a PVHO integrated into or forming part of a purpose-built, SOLAS[1]-compliant self-propelled lifeboat outfitted with the equipment and life-support systems necessary to evacuate divers and maintain life-supporting conditions for the maximum number of occupants at the maximum operating pressure of the diving system for a period of not less than 72 hr.

6-6.2.2 The HEU shall be fitted with and/or carry onboard the following:

(a) individual seats for each occupant, outfitted with a positive means to prevent injury to the occupants during launch and recovery, and in rough weather conditions.

(b) a clearly written operation procedure manual, detailing preparation for evacuation, the setup and operation of the environmental control equipment, and all other life-support equipment and systems.

(c) a list of tapping codes for nonverbal communication with personnel outside the evacuation chamber in the absence or failure of two-way radio communications.

(d) onboard oxygen to support the metabolic oxygen requirements of the maximum number of occupants for a period of 72 hr, based on a minimum flow of 0.017 standard ft^3/min (0.48 standard L/min) per occupant. Special care shall be taken to ensure adequate distribution and mixing of metabolic oxygen within the chamber.

(e) a primary and secondary means of removing carbon dioxide (CO_2) from the atmosphere, including, but not limited to, battery- and lung-powered systems with absorbent chemicals sufficient to remove the CO_2 output from the maximum number of occupants for a period of 72 hr.

(f) a primary and secondary means of chamber lighting. The primary lighting power source shall be sufficient to maintain primary lighting for a period of 72 hr. If the secondary means of lighting is powered, it too shall be sufficient for 72 hr.

[1] SOLAS is the IMO Convention on the Safety of Life at Sea.

ASMENORMDOC.COM : Click to view the full PDF of ASME PVHO-1 2019

(g) a tool kit that is capable of supporting minor repairs and maintenance inside the chamber. The tool kit shall be clearly marked and located to be easily accessible. For self-propelled lifeboats, an additional external tool kit shall be provided.

(h) a means of monitoring the chamber environment, including pressure, temperature, humidity, oxygen (O_2), and carbon dioxide (CO_2). Independent backup for O_2 and CO_2 monitoring shall be provided.

(i) a system for heating/cooling the PVHO to maintain physiologically acceptable conditions throughout the operating range of the evacuation system. Thermally protective clothing may also be provided as a passive backup system to the heating system.

(j) power sufficient to support all life-critical powered systems for a period of 72 hr.

(k) a medical kit that is suitable for at least minor injuries, with sick bags and medications for motion sickness. The kit shall be stored in a suitable container, clearly marked, and located to be easily accessible.

(l) a means of transferring equipment and supplies into and out of the chamber under pressure.

(m) meals for the maximum number of occupants for a period of 72 hr, stored in a clearly marked, easily accessible location. Each meal shall provide a minimum equivalent of 800 calories per 24-hr period per occupant. Meals that use exothermic chemical means, flames, electrical resistance, or any other heating means that are not suitable for use in pressurized, oxygen-enriched environments shall not be used.

(n) a minimum of 6 pints (3 L) of drinking water per 24-hr period per occupant for the maximum number of occupants for a period of 72 hr. The water shall be stored in a secure, clearly marked, and easily accessible location.

(o) a means of managing human waste. The system shall be capable of preventing accidental spillage during launch or recovery, or in rough weather conditions.

(p) an internationally recognized marine emergency position-indicating radio beacon (EPIRB).

(q) HEU external surfaces colored international orange.

(r) signs indicating DIVERS IN DISTRESS, located on the top and sides in three places, and sized and marked in accordance with International Maritime Organization (IMO) Resolution A.692(17) (see Figure 6-6.2.2-1).

(s) warning information located on the sides at or above the waterline in accordance with IMO Resolution A.692(17), as shown in Figure 6-6.2.2-2.

(t) a radar reflector, reflective tape, and a strobe light, installed to facilitate system location.

(u) lifting slings and towing bridles, securely stowed and labeled. The total in-air weight of the evacuation system including personnel and equipment shall be prominently displayed. In addition, each lifting point shall be clearly marked with its safe working load.

(v) a communication system capable of permitting two-way voice communication between the chamber occupants and outside attendants.

(w) a sound-powered phone secondary communication system.

(x) a waterproof emergency services interface point protected from damage by a reinforced cover. This interface shall contain connection points for power, gas/oxygen, and the internal chamber two-way voice communication system, a sound-powered phone, a copy of the operation procedure manual, a set of the tapping codes, and a complete inventory of supplies. Consideration shall be given to providing a waterproof handheld VHF radio for use by rescuing personnel.

(y) at least one viewport that provides visual access to the occupants.

6-6.3 Life-Support Package (LSP)

Each hyperbaric evacuation system shall have a separate, portable life-support package that provides all interfaces and services necessary to maintain, monitor, and control the chamber environment and conduct safe decompression of the evacuated divers.

Based on the maximum number of occupants, and the decompression duration from maximum rated depth of the HEU, the LSP shall be provided with the following:

(a) clearly written operational procedures detailing the decompression phase of the evacuation, as well as the setup and operation of the environmental control equipment and all other associated life-support equipment and systems.

(b) a list of tapping codes for nonverbal communication with personnel outside the HEU, in the absence or failure of two-way radio communications.

(c) a manifold designed to control pressurization, exhaust, oxygen (O_2) makeup and treatment mixes, as well as the life-support gas samples for analysis.

(d) a means of monitoring the HEU internal environment, including pressure, temperature, humidity, oxygen (O_2), and carbon dioxide (CO_2). Independent backup for O_2 and CO_2 monitoring shall be provided.

(e) a hard-wired communication system between the HEU and the LSP operator.

(f) an environmental control system for heating/cooling the HEU to maintain physiologically acceptable conditions throughout duration of the decompression.

(g) power-generating equipment sufficient to support electrical requirements for the duration of the decompression.

(h) a sufficient quantity of life-support gases (e.g., oxygen and helium) to support decompression, as well as treatment. In calculating the quantity of life-support gases required, the designer shall take into account the quantity of all life-support gases required for system makeup, as well as for completing the worst-case scenario treatment tables for the maximum number of occupants.

ASMENORMDOC.COM : Click to view the full PDF of ASME PVHO-1 2019

(i) interconnecting hose and cable bundles between the LSP and HEU that are capable of supplying the HEU with life-support gases and electrical power, as well as facilitating communication, environmental control, and internal environmental monitoring.

(j) a medical kit that is suitable for major injuries, including an appropriate trauma kit and relevant medical manuals.

(k) water and meals in a quantity sufficient to support both the occupants in the HEU and the LSP operating personnel for the duration of the decompression.

(l) a tool kit and repair manuals to facilitate maintenance and repair of all associated support equipment.

(m) absorbent chemicals sufficient to remove the CO_2 output from the maximum number of occupants of the HEU for the duration of the decompression.

6-6.4 Hyperbaric Evacuation Launch Systems

(a) Each HEU shall be provided with a dedicated launch system that serves as the primary means for the safe and timely evacuation of the divers.

(b) HEU launch systems shall comply with the applicable requirements of IMO Resolution A.692(17) and this Standard.

(c) Launch systems shall be designed to safely launch the HEU when the ship or support facility is under conditions of 20 deg list and 10 deg trim either way, in the fully loaded or unloaded condition.

(d) The HEU launch system may be powered by the vessel or support facility power supply, provided the vessel or facility power supply is capable of meeting all power requirements of the system.

(e) A secondary means that depends either on stored mechanical power or gravity to safely launch the HEU shall also be provided.

(f) Launch systems using wire rope for launching the HEU shall provide means for releasing the wire rope after the HEU is afloat.

(g) The wire rope shall be rotation-resistant and corrosion-resistant steel wire rope.

(h) For launch systems installed on a ship or support facility, the length of the wire rope shall be sufficient to allow the HEU to be launched in water when the ship or support facility is at its lightest draft, and under conditions of 20 deg list and 10 deg trim either way, in the fully loaded or unloaded condition.

6-7 TESTING AND TRIALS

All diving PVHO systems shall be functionally and physically tested prior to operational service. Testing and trials shall be conducted on all parts, components, and systems for a fully functional and operational diving system. All testing and trials shall be carried out by a competent person in accordance with the User's Design Specification's stipulating acceptance criteria. In many cases a third party may be required to witness and certify that the testing meets the requirements of the jurisdictional authority.

If manned testing is to be performed, the following shall be conducted first:

(a) unmanned testing to assure proper operational performance of the system

(b) a hazard analysis to identify and mitigate risks associated with manned testing

(c) a pretest safety meeting with all personnel involved with the test

As a minimum, the tests in paras. 6-7.1 and 6-7.2 shall be performed after installation on board the vessel or facility.

6-7.1 System Pressure Tests

The following tests shall be performed:

(a) internal/external pressurization test to full operational pressure (external pressure test may be included on functional testing during sea trials)

(b) pressure test of all hatches, quick-acting closures, and sealing surfaces at maximum and minimum pressures

(c) pressurization/leak test of internal and external pressure-retaining components, including, but not limited to, control manifolds, interconnecting hoses and piping, air and gas storage systems, and all primary and emergency breathing systems

6-7.2 System Functional Tests

6-7.2.1 Handling Systems (Including Those for Diving Bells, Diving Stages, and HEUs)

(a) The fully assembled handling system shall be statically load tested to 100% of the design load of the handling system. After installation on board the vessel, the handling system shall be functionally tested at its rated load at the maximum rated speed of the system. Satisfactory operation of the complete handling system, including the powered drives and brakes, shall be demonstrated, and shown to meet the requirements of subsection 6-5 or para. 6-6.4, as applicable.

(b) For diving bells and diving stages, functional testing shall be carried out to demonstrate and document proper operation of the secondary means of recovery.

(c) Testing shall be carried out to demonstrate the functioning of quick-acting closures under all operational conditions. This testing shall also demonstrate and document proper operation of interlock devices on the quick-acting closures.

(d) A test launch of the HEU shall be carried out to demonstrate and document proper mating, detachment, and deployment operations from the parent diving system, including detachment of the quick-acting closures and release hooks. The test shall be carried out with the HEU weighted to simulate the maximum load condition. The test shall demonstrate that the HEU remains upright and positively buoyant following release.

ASMENORMDOC.COM : Click to view the full PDF of ASME PVHO-1 2019

6-7.2.2 Piping, Electrical, and Control Systems

(a) Functional testing of the piping, electrical, and control systems shall be carried out to assure proper functioning of all systems, including backup and emergency systems, and to demonstrate the absence of any unacceptable hazards as required in subsection 1-11.

(b) A test shall be carried out to demonstrate the capacity of the heating/cooling system to maintain thermal balance over the range of environmental conditions as defined in the User's Design Specification.

(c) A test shall be carried out to demonstrate the capacity of the O_2 makeup system to compensate for the metabolic oxygen consumption of the maximum number of occupants for which the system is rated.

(d) A test shall be carried out to demonstrate the capacity of the primary CO_2 removal system to remove the total metabolic CO_2 output of the maximum number of occupants for which the system is rated.

(e) A test shall be carried out to demonstrate that the emergency evacuation life-support package (LSP) is able to be attached and used to maintain, monitor, and control the functional operation of the chamber including decompression.

Figure 6-6.2.2-1 Placement and Design of Markings for Hyperbaric Evacuation Units Designed to Float in Water

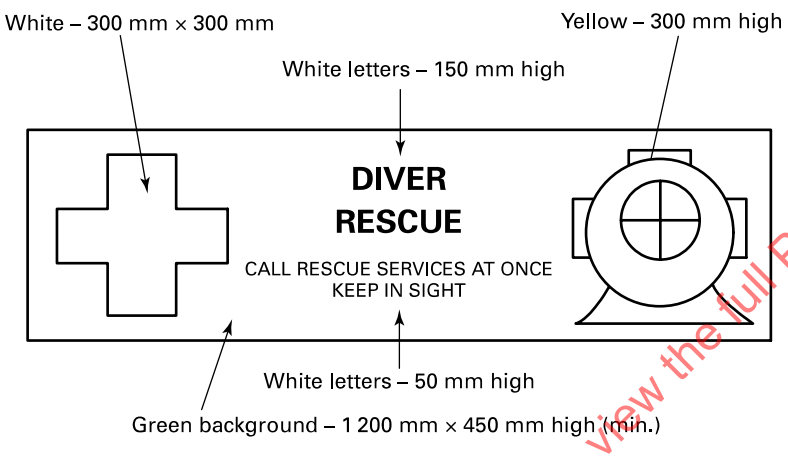

GENERAL NOTE: From IMO Resolution A.692(17).

Figure 6-6.2.2-2 Markings for Hyperbaric Evacuation Units Designed to Float in Water

UNLESS SPECIALIZED DIVING ASSISTANCE IS AVAILABLE:

DO NOT touch any valves or other controls

DO NOT take in tow unless in imminent danger

DO NOT try to get the occupants out

DO NOT connect any gas, air, water, or other supplies

DO NOT attempt to give food, drinks, or medical supplies to the occupants

DO NOT open any hatches

GENERAL NOTE: From IMO Resolution A.692(17).

ASMENORMDOC.COM : Click to view the full PDF of ASME PVHO-1 2019

Section 7
Submersibles

7-1 GENERAL

7-1.1 Scope

This Section, along with Sections 1 through 4, provides the requirements for the design, assembly, inspection, testing, and certification of PVHOs used in manned submersibles including tourist submersibles. For diver lockout chambers, see Section 6.

7-1.2 General Requirements

The PVHO shall be designed, fabricated, assembled, inspected, tested, and certified in accordance with this Section and Sections 1 through 4.

7-1.2.1 Single Failure. The basic requirement for a submersible craft design is that, in the event of any single failure, the craft can return to the surface without external assistance. Appropriate backup systems and equipment shall be incorporated to meet this general design requirement.

7-1.2.2 Operating Conditions. The submersible shall be designed for, and be capable of, operating in the service conditions and temperature ranges envisaged both on the surface and under water.

The design criteria provided herein apply to submersibles operating in waters with a seabed depth not greater than the craft's rated depth. Consideration may be given for operations in areas with a greater seabed depth on the basis of safety evaluations demonstrating the adequacy of provisions and/or procedures.

7-1.3 User's Design Specification

The user, agent on his/her behalf, designer, or the manufacturer shall provide or cause to be written a User's Design Specification. This specification shall set forth the requirements as to the intended use of the submersible and operating and environmental conditions in such detail as to constitute an adequate basis for designing, fabricating, inspecting, and testing the system as necessary to comply with this Standard. The User's Design Specification shall include, as a minimum, the following:

(a) maximum operating depth
(b) maximum operating sea state
(c) maximum operating current
(d) normal and maximum speed while surfaced and submerged
(e) minimum and maximum allowable operating temperatures (internal and external)
(f) minimum and maximum onboard personnel
(g) maximum mission time
(h) maximum lifting weight
(i) payload
(j) maximum towing speed
(k) normal, reserve, and emergency power capacities
(l) normal, reserve, and emergency life-support capacities

7-1.4 Design Certification

Conformance of the completed PVHO to the requirements of this Section and the User's Design Specification shall be established by one of the following procedures:

(a) *Professional Engineer Certification*. A Professional Engineer, registered in one or more of the U.S. states or the provinces of Canada, or the equivalent in other countries, experienced in the design of submarines, shall certify that the PVHO was designed either by him/her or under his/her supervision, or that he/she has thoroughly reviewed a design prepared by others, and that to the best of his/her knowledge, within the User's Design Specification, the PVHO design complies with this Section.

(b) *Independent Third-Party Certification*. The PVHO shall be reviewed by an independent classification society competent in pressure vessels for human occupancy,[1] and such organization shall provide a certification that, within the User's Design Specification, the PVHO design complies with this Section.

7-1.5 Documentation

The manufacturer shall retain a copy of the User's Design Specification, the Design Certification, and supporting data (test data and material test reports as required by the User's Design Specification, window certificates) for at least 5 yr.

A copy of the following shall be provided to the user:

(a) User's Design Specification
(b) window certificates
(c) any classification society certifications

[1] Systems and manned submersibles.

ASMENORMDOC.COM : Click to view the full PDF of ASME PVHO-1 2019

(d) vessel drawings necessary for the maintenance, inspection, and repair of the PVHO

(e) operations manual

7-1.6 Operations Manual

An operations manual describing normal and emergency operational procedures shall be provided. In addition to items listed in para. 7-1.3, the manual shall include

(a) systems description

(b) operational check-off list (list shall include equipment requiring operational status verification or inspection prior to each dive/operation)

(c) special restrictions based on uniqueness of the design and operating conditions

(d) life-support systems descriptions including capacities

(e) electrical system description

(f) ballast system description

(g) fire-suppression system description

(h) launch and recovery operation procedures

(i) normal and emergency communications procedures

(j) emergency rescue plan

(k) emergency procedures for situations including, but not limited to, the following:

(1) power failure

(2) break in umbilical cord (if applicable)

(3) deballasting/jettisoning

(4) loss of communications

(5) life-support system malfunction

(6) fire

(7) entanglement

(8) high hydrogen level (if applicable)

(9) high oxygen level

(10) high carbon dioxide (CO_2) level

(11) internal and external oxygen leaks

(12) being stranded on the bottom

(13) minor flooding

(14) specific emergency conditions (characteristic of special types of systems)

(15) loss of propulsion

(16) deteriorated surface conditions during a dive

7-2 PRESSURE BOUNDARY

7-2.1 General

The pressure boundary of submersibles built to this Section shall be designed and constructed in accordance with Section 1. Other recognized industry standards for the design, construction, and testing of manned submersibles that have been validated through testing and service and that are suitable for the intended service and acceptable to the jurisdiction may also be used where Section 1 does not address industry-specific issues for the design of submersibles.

Testing of the PVHO shall be in accordance with the recognized engineering methods used. As a minimum requirement, such testing shall be 1.25 times the design pressure. The designer is cautioned that specific design requirements may be driven by depth, service, and environment. It is the designer's responsibility to provide a safe design.

7-2.2 Hatches

7-2.2.1 Number, Size, and Location. The following shall be considered when determining the number, size, and location of access hatches:

(a) evacuation of crew and passengers in an emergency situation

(b) risks such as fire, smoke, stability of the craft, and possible down-flooding due to adverse sea state

The number of hatches shall not be unnecessarily increased beyond the safe minimum as determined in (a) and (b).

7-2.2.2 Opening, Closing, and Securing. Opening and closing of hatches shall be possible by a single person, in all anticipated operating conditions.

Provisions shall be made for opening/closing hatches from both sides.

Two means, one of which should be visual, shall be available to ensure that hatches are closed and secured prior to diving.

Hatches shall have a means for securing them in the open and closed positions.

7-2.2.3 Equalization. Means shall be available to ensure that pressures on either side of the hatch are equalized prior to opening.

7-2.3 Viewports

Viewports shall comply with Section 2.

7-2.4 Penetrators

7-2.4.1 Mechanical Penetrators. Mechanical penetrators shall be designed such that in the event of failure, the penetrator remains intact and does not allow leakage into the pressure hull.

7-2.4.2 Hull Shut-Off Valves. Any piping systems penetrating the pressure hull shall be equipped with a valve that can be operated manually. These valves shall be mounted directly on the inner side of the hull or on short and strong stub pieces (capable of withstanding anticipated mechanical and pressure loads) fitted between the valve and hull.

7-2.4.3 Testing Electrical Penetrators. Samples of penetrating devices conveying electricity through pressure boundaries shall be tested as indicated below, in the listed sequence of tests. Where applicable, penetrators shall be tested assembled with a length of cable of the type

ASMENORMDOC.COM : Click to view the full PDF of ASME PVHO-1 2019

that will be used in the installation. The cable and penetrator assemblies are to show no sign of deficiency during or after the test.

(a) voltage test by separately applying 1 kV plus twice the design voltage for 1 min across each conductor and armor separately under the most unfavorable environmental condition they will be subjected to during service.

(b) hydrostatic test to a pressure of 1.5 times the design pressure repeated six times. The pressure shall be applied to the side that will be under pressure in the actual application and shall be maintained for 20 min after the last cycle.

(c) gas leakage test with cable cut open using air to twice the design pressure or helium to 1.5 times the design pressure.

(d) insulation test to 5 MO at design pressure applying salt water. Tests shall be made between each conductor and armor.

Electrical conductors within the penetrating device shall be of solid material.

7-2.4.4 Electrical Penetrators. The positive and negative conductors from a power source shall not pass through the same penetrating device unless

(a) it can be shown that there is little risk of short circuiting or tracking between conductors

(b) the voltages and currents are of such an order that, in the event of failure in any way of the conductor insulation, the integrity of the penetrating device's water block is maintained

Electrical penetrating devices shall not have any pipes or other system passing through them. Different types of penetrating devices passing through a common plate are acceptable.

7-3 PIPING

7-3.1 Exceptions and Alternatives

7-3.1.1 Relieving Devices. In lieu of subsection 1-8, for PVHOs not internally pressurized, the following shall apply:

(a) A pressure-relieving device shall be used to ensure the internal pressure does not exceed that specified by the designer.

(b) A shutoff valve shall be installed upstream of the pressure-relieving device and shall be accessible to the attendant/pilot monitoring the operation of the PVHO.

(c) Rupture disks shall not be used.

7-3.1.2 User's Design Specification. In lieu of para. 4-1.2, the following information shall be documented on the system assembly drawing, in the operations manual, and/or in the User's Design Specification:

(a) the system maximum allowable working pressure (MAWP)

(b) conditions affecting the requirements for, and amounts of, stored gas reserves

7-3.1.3 Marking. Compliance with para. 4-2.4.4 is required with the exception that the hoses do not have to be tagged or marked with the test pressure or test dates. Hose assemblies shall be tested in accordance with para. 4-2.4.5. Hose testing shall be documented.

7-3.2 Internal and External Pressures

Systems, fittings, and equipment subject to internal or external pressure or a combination of both shall be designed for the worst combination(s) of the above (e.g., external oxygen systems).

7-3.3 Ambient Pressure

Systems, piping, and equipment exposed to ambient sea pressure shall be suitable for the intended service and capable of withstanding all anticipated pressure differentials.

7-3.4 Inaccessible Spaces

Piping passing through spaces inaccessible for maintenance shall be of continuous pipe.

7-3.5 Hull Valves

For piping systems penetrating the occupied pressure hull and open to the sea, a nonreturn valve or shutoff valve shall be provided in addition to that provided in accordance with para. 7-2.4.2.

7-3.6 Plug Valves

Plug valves shall not be used.

7-3.7 Pressure Containers

The volume of a single internal gas source shall be limited in such a way that complete release of its contents will not increase the pressure beyond the safe limit for the craft and its occupants.

Cylinders and pressure vessels mounted externally, which may be depleted while at depth, shall be designed to withstand external pressures equal to the design depth of the submersible.

7-4 ELECTRICAL SYSTEMS

7-4.1 General

All power sources and electrical equipment shall be designed for the environment in which they will operate to minimize the risk of fire, explosion, electrical shock, and emission of toxic gases to personnel and passengers, and galvanic action of the submersible.

The designer shall consider pressure and pressure cycling, humidity, moisture, temperature, oxygen concentration, hydrogen concentration, and cable combustibility.

ASMENORMDOC.COM : Click to view the full PDF of ASME PVHO-1 2019

7-4.2 Power Supplies

7-4.2.1 General. The submersible shall have a separate main and an onboard emergency source of electrical power.

7-4.2.2 Main Power. The main source of electrical power shall have a reserve capacity beyond the normal mission time to supply, where and as appropriate, the following systems for a period of time consistent with the plan to rescue the submarine from its rated depth. The period of time shall in no case be less than 24 hr.

(a) emergency lighting
(b) communication equipment
(c) life-support systems
(d) environmental monitoring equipment
(e) essential control systems
(f) other equipment necessary to sustain life

7-4.2.3 Emergency Power. The emergency source of electrical power shall be located so as to ensure its functioning in the event of fire or other casualty causing failure to the main electrical power source.

The onboard emergency source of electrical power shall have the capacity to supply the systems listed in paras. 7-4.2.2(a), (b), and (d) through (f), plus the emergency life-support system, if electrically supplied, for 150% of the time normally required to reach the surface or 1 hr, whichever is greater, unless otherwise approved on the basis of special operating conditions.

7-4.3 Electrical Cables

7-4.3.1 Protection. Power cables shall have short-circuit and overload protection. The device connected to power cables passing through a pressure boundary shall have response characteristics that ensure watertight integrity of the electrical penetrators. Protection devices located in the battery compartment shall not provide an ignition source for the hydrogen gas.

7-4.3.2 Main and Emergency Cables. Cables and wiring of circuits supplied by different voltages and by main and emergency circuits shall be effectively separated from each other.

7-4.3.3 Positive and Negative Conductors. Positive and negative conductors from power sources shall not pass through the same penetrator or connection in a pressure boundary and shall be spaced sufficiently to prevent damaging currents.

7-4.3.4 Pressure Boundary. The pressure boundary shall not be used as a current-carrying conductor.

7-4.3.5 Grounding. All electrical power distribution systems shall be ungrounded and insulated to minimize the occurrence of faults and stray currents that may create galvanic corrosion.

7-4.3.6 Insulation Material. Materials for uncompensated cable and wiring insulation subjected to external pressure shall be able to withstand a hydrostatic pressure of 1.5 times the design pressure of the submersible. Submerged cable assemblies shall be tested by the continuous application of an alternating current voltage of at least 500 V for 1 min. This shall be performed with the jacket exposed to seawater. The quality of the assembly shall be such that the leakage current will neither prevent proper operation of the systems nor expose personnel to unsafe voltages.

7-4.4 Battery Compartments

7-4.4.1 Sources of Ignition. Design or procedural precautions shall be taken to eliminate all potential sources of ignition within battery compartments.

7-4.4.2 Hydrogen Levels. Design features shall be in place to avoid the potential hazards arising from hydrogen accumulation.

For batteries located within the occupied pressure boundary, hydrogen gas concentrations shall be monitored and maintained at a level below the lower explosive limit.

7-4.5 Emergency Lighting

Internal emergency lighting that is switched on automatically if the main power supply fails shall be installed.

7-5 LIFE SUPPORT

7-5.1 General

The submersible shall be provided with systems and equipment necessary to ensure adequate life-support services during normal and emergency conditions.

A separate main and an onboard emergency life-support system shall be provided for maintaining the oxygen content of the breathing gas between 18% and 23% by volume and the concentration of carbon dioxide (CO_2) below 0.5% by volume under normal conditions and 1.5% by volume under emergency conditions.

7-5.2 Main Life Support

The main life-support system shall have sufficient capacity for the design mission time plus a period of time consistent with the plan to rescue the submarine from its rated depth. This period of time shall in no case be less than 24 hr and shall be consistent with the requirements of para. 7-4.2.2.

7-5.3 Emergency Life Support

The capacity of the onboard emergency life-support system shall be sufficient for 150% of the time normally required to reach the surface or 1 hr, whichever is greater, unless otherwise approved on the basis of special

ASMENORMDOC.COM : Click to view the full PDF of ASME PVHO-1 2019

operating conditions, and shall be consistent with the requirements of para. 7-4.2.3.

(a) Emergency breathing gas shall be supplied through full-face masks, oral–nasal masks, self-contained rebreathers, or other means suitable for supporting life in a contaminated environment, including the by-products of an onboard fire. One mask per person shall be provided.

(b) The emergency life-support system shall be independent of any surface support systems and independent of the main life-support systems.

(c) Where open-circuit systems are used, the effects of increased compartment pressure shall be considered.

7-5.4 Consumption Rates

For calculating the required capacities of main and emergency life-support systems, the consumption of oxygen shall be at a rate of 1 ft^3 (28.3 L) per hr per person and a carbon dioxide (CO_2) production rate of 0.115 lb (0.0523 kg) per hr per person, at 1 atm.

7-5.5 Oxygen Systems and Storage

(a) When oxygen storage containers are located inside the pressure hull, the volume of a single container shall be limited such that the release of its contents shall not increase the pressure in the occupied PVHO by more than 1 atm or raise the oxygen level above 25% by volume. The designer, as may be required by other constraints, shall limit the allowable pressure increase.

(b) When oxygen storage containers are stored outside the pressure hull, they shall be arranged in at least two banks with separate penetrations entering the submersible. The pressure containers shall be designed for an external pressure differential of not less than the rated depth of the submersible.

(c) In view of the hazards associated with oxygen systems, consideration shall be given to the selection of materials, equipment, installation, cleaning, and testing procedures.

7-5.6 Monitoring

Capability shall be available to the pilot for monitoring oxygen (O_2) levels, carbon dioxide (CO_2) concentrations, humidity, temperature, and pressure of all occupied spaces.

Means shall be provided, and/or operational procedures implemented, to notify of a malfunction of the life-support systems.

7-6 FIRE PROTECTION

7-6.1 Materials

The construction of the submersible shall minimize hazards of smoke and fire. All materials and equipment within the craft shall be nonflammable within the range of oxygen (O_2) levels envisaged.

7-6.2 Toxicity

Toxicity of burning materials and low flame-spread characteristics shall be taken into consideration.

7-6.3 Smoke Detectors

The designer shall consider the size of the submersible, usage of unoccupied spaces, and the ability of occupants to detect fire/smoke, in advance of an onboard detector, in determining the location and quantity of smoke detectors.

7-6.4 Extinguishers

All submersibles shall be equipped with a suitable means of fire extinguishing. This may consist of a permanently installed system and/or portable extinguishers. The design of the system and selection of the extinguishing medium shall consider type and location of fire anticipated, hazards to human health, and the effects of increased pressure. Carbon dioxide and seawater are considered unsuitable.

7-7 NAVIGATION

7-7.1 General

Submersible craft shall be provided with navigational equipment to enable safe operation under all design conditions. Equipment shall include, but not be limited to, the following:

(a) directional indicator
(b) depth indicator
(c) depth sounder
(d) clock
(e) trim and heel indicator
(f) underwater location device

7-7.2 Propulsion

Submersibles equipped with propulsion systems shall be provided with adequate controls and indicators to enable safe operation under all design conditions.

7-7.3 Depth Gauges

Two independent instruments for registration of depth shall be provided. At least one of these instruments shall be a pressure gauge capable of functioning in an emergency situation. If both are pressure gauges, they shall not have a common inlet.

7-7.4 Depth Alarm

Submersibles operating in water where the seabed depth is greater than the rated depth of the submersible shall have a depth alarm set at no greater than the rated depth of the craft.

ASMENORMDOC.COM : Click to view the full PDF of ASME PVHO-1 2019

7-7.5 Obstacle Avoidance

Operational procedures and/or onboard equipment shall be used to provide adequate means of avoiding obstacles under all anticipated operational conditions.

7-7.6 Surfaced Detection

Means shall be provided to render the submersible, while on the surface, readily visible to other vessels.

7-7.7 Submerged Detection

Means shall be provided to indicate the submersible's location while it is submerged.

Where a releasable location system is used, the release arrangement may be manual or hand-hydraulic. It shall not depend on electrical power for its operation and shall be able to operate at all anticipated angles of heel and trim. The size of the float and length of line shall be such that expected current action on the line does not prevent the float from coming to the surface.

7-8 COMMUNICATIONS

7-8.1 General

Each submersible shall be fitted with such equipment as is necessary for the crew to communicate with personnel at the support facility when on the surface and when submerged.

7-8.2 VHF Radio

Each submersible shall be equipped with at least one two-channel transmitter/receiver, one of the channels of which shall operate on safety channel 16-VHF, while the other is used as a "working channel" for communication between the submersible craft and its support facility.

7-8.3 Underwater Telephone (UWT)

Each submersible shall be equipped with at least one dual-channel underwater telephone system. This system shall enable two-way communications to be maintained with the support facility.

7-8.4 Pinger

In addition to the requirements of para. 7-7.7, each submersible shall be fitted with an acoustic underwater pinger, compatible with equipment available for executing an underwater search and rescue. The pinger shall remain operational in the event of loss of main power.

7-9 INSTRUMENTATION

7-9.1 General

The pilot shall be able to monitor the conditions affecting the safety of the submersible craft and its occupants.

7-9.2 Water Intrusion

An audio alarm indicating water leakage into the main pressure hull, battery pods, and other compartments, as may be deemed necessary, shall be incorporated into the design.

7-9.3 Power Levels

Visual indications of available power (fuel, electrical, etc.) shall be provided.

7-9.4 Voltage and Current Meters

Voltage of, and current from, each electrical source of power shall be provided.

7-9.5 Ground Faults

A ground/earth fault monitoring system shall be provided.

7-9.6 Ballast Water

Where water ballast systems are used, a visual display showing the quantities of ballast water onboard shall be provided.

7-10 BUOYANCY, STABILITY, EMERGENCY ASCENT, AND ENTANGLEMENT

7-10.1 General

Submersibles shall be able to ascend/descend in a safe and controlled manner throughout the craft's depth of operations.

Submersibles shall be able to maintain an acceptable stability and trim during ascent and descent, while submerged, and on the surface. Acceptable stability and trim shall be maintained during transit from a submerged to a surfaced condition, and vice versa. The submersible craft shall be capable of remaining on the surface with the hatch(es) open during all anticipated design environmental and operating conditions without down-flooding.

The arrangements for blowing ballast tanks shall be such that overpressurization is not possible.

7-10.2 Underwater Operation

The submarine shall, under all conditions of loading and ballast, remain stable and in the upright condition with the center of gravity remaining below the center of buoyancy.

ASMENORMDOC.COM : Click to view the full PDF of ASME PVHO-1 2019

The distance between the center of gravity and the center of buoyancy (GB), under all normal operating conditions, is the greater of 1.5 in. (38 mm) or as determined by the following:

$$GB = nwNd/W \tan \alpha$$

where

d = the interior distance within the main cabin accessible to onboard personnel, in. (mm)
N = total number of persons onboard the submarine
n = 0.1 (10% of the people aboard moving simultaneously)
W = the total weight of the fully loaded submarine, lb (kg)
w = 175 lb (79.5 kg) per person
α = 25 deg or less if required by other design features including battery spillage or malfunction of essential equipment

7-10.3 Surfacing

(a) A pilot-operated means that is independent of the jettison system required in para. 7-10.4 shall be provided to bring the submersible to the surface in a stable condition.

(b) The submersible shall be equipped with at least two lifting points to which attachments may be secured to raise the vehicle to the surface in an emergency. The lugs and their connection to the vehicle structure shall be designed taking into account loads generated by forces of 2g vertical (1g static plus 1g dynamic), 1g transversal, and 1g longitudinal acting simultaneously under the most severe condition, or the submersible craft shall be provided with means of externally bringing the craft to the surface, in all anticipated operating and emergency conditions, without assistance from personnel inside of the submersible.

7-10.4 Jettisoning System

(a) Submersibles shall be provided with a means to jettison sufficient mass such that if the largest single floodable volume, other than personnel compartments, is flooded, an ascent rate approximating the normal ascent rate can be achieved. The jettisoned mass may consist of a drop weight, appendages subject to entanglement, or a combination of both. Alternatively, the passenger compartment may be provided with a means of separating it from all other parts of the system, including appendages, provided the personnel compartment is positively buoyant when released.

(b) Consideration shall be given to the jettisoning of appendages subject to entanglement including, but not limited to, thrusters, manipulators, cameras, and pan and tilt systems.

(c) Jettison systems shall require at least two positive manual actions and shall be independent of electric power.

(d) Submersibles shall have stability under any combination of jettisoned masses to provide safe recovery of personnel.

7-10.5 Entanglement

The possibility of entanglements shall be considered in the design of submersible craft. Design features, operational and emergency procedures, and/or means of jettisoning may be necessary.

7-11 EMERGENCY EQUIPMENT

7-11.1 Life Jackets

Life jackets shall be provided for, and accessible to, each person on the submersible. Personnel shall be able to disembark with a donned life jacket. Inflatable-type life jackets should be considered to facilitate disembarkation.

7-11.2 First Aid Kit

Submersibles shall be provided with a first aid kit appropriate for the environment and intended needs.

7-11.3 Thermal Protection

Submersibles operating in cold waters shall be equipped with sufficient emergency thermal protection for all occupants in consideration of the duration of onboard life-support systems.

7-11.4 Rations

Sufficient food and water rations shall be provided for each person onboard as may be required for normal and emergency operations.

7-11.5 Tow Point

An accessible towing point shall be provided.

ASMENORMDOC.COM : Click to view the full PDF of ASME PVHO-1 2019

MANDATORY APPENDIX I
REFERENCE CODES, STANDARDS, AND SPECIFICATIONS

Codes, standards, and specifications incorporated in this Standard by reference, and the names and addresses of the sponsoring organizations, are shown below. The most current edition, including addenda, of referenced codes, standards, and specifications shall be used.

21 CFR 820, Food and Drugs, Quality System Regulation
29 CFR 1910, Occupational Safety and Health Standards
Publisher: U.S. Government Publishing Office (GPO), 732 N. Capitol Street, NW, Washington, DC 20401 (www.gpo.gov)

ANSI/FCI 70-2, American National Standard for Control Valve Seat Leakage
Publisher: Fluid Controls Institute (FCI), 1300 Sumner Avenue, Cleveland, OH 44115 (www.fluidcontrolsinstitute.org)

ASME B1.20.1, Pipe Threads, General Purpose (Inch)
ASME B31.1, Power Piping
ASME B36.10M, Welded and Seamless Wrought Steel Pipe
ASME B36.19M, Stainless Steel Pipe
ASME Boiler and Pressure Vessel Code
ASME PVHO-2, Safety Standard for Pressure Vessels for Human Occupancy: In-Service Guidelines
Publisher: The American Society of Mechanical Engineers (ASME), Two Park Avenue, New York, NY 10016-5990 (www.asme.org)

ASTM B88, Specification for Seamless Copper Water Tube
ASTM B154, Method of Mercurous Nitrate Test for Copper and Copper Alloys
ASTM D256, Test Methods for Impact Resistance of Plastics and Electrical Insulating Materials
ASTM D542, Test Methods for Index of Refraction of Transparent Organic Plastics
ASTM D570, Test Method for Water Absorption of Plastics
ASTM D638, Test Method for Tensile Properties of Plastics
ASTM D648, Test Method for Deflection Temperature of Plastics Under Flexural Load
ASTM D695, Test Method for Compressive Properties of Rigid Plastics
ASTM D696, Test Method for Coefficient of Linear Thermal Expansion of Plastics
ASTM D732, Test Method for Shear Strength of Plastics by Punch Tool
ASTM D785, Test Method for Rockwell Hardness of Plastics and Electrical Insulating Materials
ASTM D790, Test Methods for Flexural Properties of Unreinforced and Reinforced Plastics and Electrical Insulating Materials
ASTM D792, Test Method for Specific Gravity (Relative Density) and Density of Plastics by Displacement
ASTM E208, Method for Conducting Drop-Weight Test to Determine Nil-Ductility Transition Temperature of Ferritic Steels
ASTM E308, Method for Computing the Colors of Objects by Using the CIE System
ASTM G63, Standard Guide for Evaluating Nonmetallic Materials for Oxygen Service
ASTM G88, Standard Guide for Designing Systems for Oxygen Service
ASTM Manual 36, Safe Use of Oxygen and Oxygen Systems: Guidelines for Oxygen System Design, Materials Selection, Operations, Storage, and Transportation
Publisher: American Society for Testing and Materials (ASTM International), 100 Barr Harbor Drive, P.O. Box C700, West Conshohocken, PA 19428-2959 (www.astm.org)

CGA G-4.4 Oxygen Pipeline Systems
Publisher: Compressed Gas Association (CGA), 14501 George Carter Way, Suite 103, Chantilly, VA 20151 (www.cganet.com)

ISO 9001, Quality management systems — Requirements[1]
ISO 13485, Medical devices — Quality management systems — Requirements for regulatory purposes[1]
Publisher: International Organization for Standardization (ISO), Central Secretariat, Chemin de Blandonnet 8, Case postale 401, 1214 Vernier, Geneva, Switzerland (www.iso.org)

NASA Technical Manual TMX 64711, Compatibility of Materials with Liquid Oxygen, October 1, 1972
Publisher: Marshall Space Flight Center, Building 4200, Room 120, MSFC, Huntsville, AL 35812 (www.msfc.nasa.gov)

Naval Ships' Technical Manual NAVSEA S9086-H7-STM-010/CH-262R6, Chapter 262, Lubricating Oils, Greases, Specialty Lubricants, and Lubrication Systems

[1] May also be obtained from the American National Standards Institute (ANSI), 25 West 43rd Street, New York, NY 10036 (www.ansi.org).

ASMENORMDOC.COM : Click to view the full PDF of ASME PVHO-1 2019

Publisher: Commander Naval Sea Systems Command, 1333 Isaac Hull Avenue, SE, Washington Navy Yard, DC 20376-1080 (www.navsea.navy.mil)

NFPA 99, Standards for Health Care Facilities
Publisher: National Fire Protection Association (NFPA), 1 Batterymarch Park, Quincy, MA 02169 (www.nfpa.org)

Threshold Limit Values for Chemical Substances
Publisher: American Conference of Governmental Industrial Hygienists (ACGIH), 1330 Kemper Meadow Drive, Cincinnati, OH 45240 (www.acgih.org)

ASMENORMDOC.COM : Click to view the full PDF of ASME PVHO-1 2019

MANDATORY APPENDIX II DEFINITIONS

(19)

ACGIH: American Conference of Governmental Industrial Hygienists.

acrylic: methyl methacrylate polymer possessing physical and mechanical properties shown in Tables 2-3.4-1 and 2-3.4-2.

air-ventilated PVHO: a PVHO in which a flow of breathing air is supplied to the PVHO and exhausted to the atmosphere for the purpose of maintaining life-sustaining conditions.

ballast tank: a compartment/tank used to control the buoyancy of a submersible PVHO.

brazed fitting (tube): any tube or pipe fitting that is attached to the pipe or tube by means of a brazing process.

breathing device: the appliance used to deliver a breathing gas to a PVHO occupant. The gas may be different from the chamber atmosphere.

breathing gas: any gas intended for use as a respirable gas.

breathing gas service: any line that carries gas that is intended for use as a respirable environmental gas in an occupied space or is intended for use in some type of breathing apparatus is considered to be in breathing gas service.

breathing gas system: any system that is used to handle gas (including air) intended for human respiration. All oxygen systems are considered breathing gas systems.

chamber: a pressure vessel intended for occupancy by humans.

chamber system: one or more chambers intended to function as an operational unit.

chip: a small fracture flaw in the window surface (most typically, the result of impact with a hard object).

closure: a mechanism that allows opening and/or closing for attachment or disconnection of an associated PVHO, hatch, or door. Includes both fixed clamps and quick-opening clamps.

clump weight: the weight attached to and deployed by the guide wire system.

component: consists of, but not limited to, items such as pipe, piping subassemblies, parts, valves, strainers, relief devices, and fittings.

compression fitting (tube): any tube fitting that grips the tube by means of one or more ferrules that compress or swage the end of the tube without creating a definite notch in the tube wall.

conical frustum window: a flat, circular window geometry with a conic section bearing edge.

contamination (window): a noticeable local discoloration or opaqueness without well-defined boundaries on the surface or body of the acrylic window.

conversion factor (CF) (window): an empirical ratio of short-term critical pressure to design pressure for a given temperature.

crack (window): a discontinuity in the acrylic indicating local failure of the acrylic window. A crack is characterized by its length and depth.

crazing (window): a haze on the surface of the window made up of a multitude of very fine, hair-like straight or randomly oriented cracks that become clearly visible if illuminated at an angle by a bright light. Crazing is an indication of surface degradation that may be thermally, mechanically, radiation, or chemically induced.

critical density of population: number of significant inclusions or scratches per specified contiguous area or volume of window that cannot be exceeded in a finished window.

critical dimension (window): the maximum dimension of discontinuity on the surface or in the body of an acrylic window. For inclusions, it is the effective diameter, whereas for scratches, it is the depth.

critical locations (window): locations on the surface or interior of the window where no discontinuities or artifacts are permitted.

critical pressure (window): pressure that, acting on one side of the window, causes it to lose structural integrity.

critical size of population (window): total number of inclusions or total length of scratches with significant dimensions that cannot be exceeded in a finished window.

critical spacing (window): the minimum allowable spacing between peripheries of inclusions or scratches with significant dimensions in a finished window.

custom casting (window): a casting of any shape that is not carried as a standard production item.

ASMENORMDOC.COM : Click to view the full PDF of ASME PVHO-1 2019

cyclic design life (window): the number of pressure cycles that a window is projected to withstand without catastrophic failure when pressure cycled, at 4 hr per cycle, to design pressure at design temperature.

cyclic proof pressure (CPP) (window): the pressure that a window shall withstand without cracking under intermittent pressurization.

cylindrical window: a window consisting of a tube with circular cross section.

deck decompression chamber: a PVHO used for operational recompression, barotrauma treatment, and decompression of divers.

design cycle (windows): the design cycle is used as the basis for the development of the conversion factors used herein. For the purpose of this Standard, it is a pressure excursion at design temperature to the design pressure and returning to ambient. Pressure is held for 4 hr at both the design and ambient pressures.

design depth: the maximum depth to which the submersible PVHO is designed to operate.

design life (windows): the period of time and/or number of design cycles assumed for a window complying with this Standard. The window design life may be different for different types of windows. The design life has three aspects: total time under pressure, cyclic design life, and total chronological time from the date of initial manufacture.

design pressure: the highest pressure that shall be reached in the pressure vessel including coincident static head in the operating position and at the most severe combination of pressure and temperature expected in normal operations. For this condition the maximum differences in pressure between the inside and outside of a pressure vessel or between any two chambers or a combination unit, shall be considered.

design qualification (window): an experimental procedure for verifying the conformance of a nonstandard window design to mandatory structural requirements of this Standard.

design temperature: maximum and minimum temperatures for which a pressure component is designed.

ding (window): a crater-like, shallow, crack-free indentation in the window surface resulting from impact. The depth of the indentation is typically less than the diameter of the crater at the window surface.

diving system: a PVHO system that is used for diving, support of diving operations, or diving training.

drop weight: a releasable weight(s) attached to the diving bell.

elastomer: a natural or synthetic material that is elastic or resilient and in general resembles rubber in its deformation under tensile or compressive stresses (i.e., at least 50% elastic compression and 70% elastic extension).

examination: the process of determining the condition of an area of interest by nondestructive means measured against established acceptance or rejection criteria. Examination is generally performed using nondestructive examination (NDE) methods, e.g., visual, liquid penetrant, radiography, or ultrasonic.

fabricator: an individual or organization that creates a component, part, or product from raw materials meeting a material and design specification(s).

fiber (window inclusion): a nonmetallic fiber in an acrylic casting (e.g., individual hair or fiber of cotton, polyester, or nylon) with diameter <0.005 in. (0.125 mm).

flammable: a material capable, when ignited, of maintaining combustion under specific environmental conditions.

flare fitting (tube): any tube fitting that grips the tube by means of a flare that is applied to the end of the tube by mechanical means.

flat disk window: a plane, circular window geometry.

Fp: adjustment factor to be multiplied by the ACGIH TLV when the anticipated duration of manned occupation is in excess of 8 hr.

full-scale window: a window whose dimensions are identical to the window in actual service.

gas chromatography/mass spectrometry (GC/MS): method of identifying and quantifying volatile hydrocarbons using a combination of gas chromatography and mass spectrometry.

gas container: a pressure vessel for the storage and transport of gases under pressure.

gouge (window): a wide, V-shaped, crack-free discontinuity in the window surface resulting from the movement of a rough, hard object across the surface of the window. The depth of the gouge is typically less than or equal to the width of the discontinuity.

guide wire(s): an independent system of wires used to deploy a clump weight that provides vertical and rotational stability to the diving bell. These are typically connected at two or four points on the diving bell protection frame. Connection is by means of special clamps designed to allow the diving bell to run freely up and down the guide wires.

handling system: a system to support the launch, recovery, and other handling operations of diving bells and may include cranes, booms, masts, frames, winches, and associated hydraulic and electrical systems as necessary for the intended operations.

ASMENORMDOC.COM : Click to view the full PDF of ASME PVHO-1 2019

handling system design load: the design load is the maximum expected load on the handling system and consists of a combination of the rated load; the dynamic effects of pitch, roll, and heave; the weight of the rigging (hooks, blocks, deployed rope, etc.); and other applicable loads, e.g., wind load, drag, added mass effect, and weight of entrained mud and water.

handling system rated load/safe working load: the rated load or safe working load is the maximum load that the assembled handling system is certified to lift at its maximum rated speed when the outermost layer of rope or umbilical is being wound on the winch drum, under the parameters specified in the User's Design Specification (e.g., hydraulic pressures and electrical currents/voltages).

harmful chemicals (window): liquid, solid, or gaseous substances that, upon contact with surfaces of stressed acrylic windows, initiate crazing (e.g., alcohols, acetone, ether, methyl ethyl ketone, and adhesive tapes).

helium service: any portion of a piping system that may contain gases containing helium shall be considered to be in helium service.

hemispherical window: a geometry that depicts a half-spherical window shape.

high-pressure face (window): viewing surface of the window that in service is acted upon by the pressure loading on the window.

hydrocarbon: all organic compounds detectable by a total hydrocarbon analyzer.

hyperbaric stretcher: a portable monoplace PVHO approved for transfer under pressure.

hyperhemispherical window: a spherical acrylic shell having an included angle greater than 180 deg, a single penetration, and a conical bearing surface.

inclusion-fiber (window): a nonmetallic fiber in an acrylic casting (e.g., individual hair or fiber of cotton, polyester, or nylon) with diameter <0.005 in. (0.125 mm).

inclusion (window): a foreign substance or void in the body of acrylic with a dimension measured as the diameter of a sphere having an equivalent volume of the inclusion.

inspection: activities performed to verify that materials, fabrication, construction, examinations, testing, repairs, etc., conform to applicable code, engineering, and/or owner's written procedure requirements.

inventory control identification (window): identification assigned to a single sheet or custom casting by the fabricator of windows when lot identification is not provided by the manufacturer of plastic.

life-sensitive system: any system where an interruption of service represents a hazard to the health and well-being of the chamber occupants.

life-support system: the equipment and systems required to maintain a habitable atmosphere in the PVHO in all anticipated operating conditions.

lock: a chamber compartment that can be maintained at a pressure different from other connected compartments (e.g., inner lock, outer lock, entry lock, med/service lock).

long-term proof pressure (LTPP): pressure that a window shall withstand without catastrophic failure under sustained pressurization of 80,000-hr duration in design temperature ambient environment. This Standard defines long-term proof pressure as equal to design pressure.

lot identification (window): identification affixed by the manufacturer of plastic to all castings constituting a lot of material.

lot of material (window): a unit of manufacture consisting of a single production run poured from the same mix of monometric material and made at the same time, undergoing identical processing from monomer to polymer.

low-pressure face (window): viewing surface of the window that while in-service is not acted upon by the pressure applied to the window.

manufacturer: an individual or organization responsible for the repeated production of a product (e.g., multiple pressure vessels of the same design, windows, valves, and other components), or referenced as the entity responsible for a uniquely specified product on a form, nameplate, or report, in accordance with the rules of ASME PVHO-1 and the User's Design Specification.

marine system: a chamber or chamber system that is to be used in a marine environment. For the purposes of this Standard, all chambers and chamber systems that are not exclusively land-based are considered marine systems.

marking (window): identification on the window's bearing surface or edge denoting that the window met the PVHO-1 Standard requirements for the specified design temperature and pressure. The fabricator's identification symbol, serial number, and year of fabrication are also part of the marking.

material manufacturer: an organization responsible for the production of raw materials/products meeting the requirements of a material specification, and accepting the responsibility for any statements or data in any required certificate of compliance or Material Test Report representing the material.

material specification: a description of the identifying characteristics of a material (product, form, ranges of composition, mechanical properties, methods of production, etc.) together with sampling, testing, and examination procedures to be applied to production lots of such material to verify acceptable conformance to the intended characteristics.

ASMENORMDOC.COM : Click to view the full PDF of ASME PVHO-1 2019

material testing laboratory (window): the party who tests material specimens cut from plastic casting and provides Material Testing Certification for Acrylic (PVHO-1 Form VP-4).

maximum allowable working pressure (MAWP): maximum rated pressure for a component.

maximum operating pressure: the maximum pressure in which a system (pressure vessel, supporting controls, and instrumentation) shall be operated.

medical chamber: a chamber or chamber system that is intended for use as part of a clinical setting for administering hyperbaric oxygen therapy or other hyperbaric medical treatments.

medical lock: a small compartment that penetrates the pressure hull of the PVHO, allowing items to be transferred into and out of a PVHO under pressure.

megapascal (MPa): the SI unit of pressure equal to 10 bar, or 145 psi.

model-scale window: a window whose dimensions are all scaled down linearly from the window in actual service.

monoplace chamber: a PVHO designed to accommodate a single person.

multiplace chamber: a PVHO designed to accommodate two or more people.

NEMO window: a spherical acrylic shell with two or more conical penetrations whose edges are supported by inserts with conical edges.

nominal values: specified dimensions or angles for components of a chamber to which dimensional tolerances are subsequently applied on fabrication drawings.

nonstandard window geometry: unproven window geometry that must first be experimentally qualified for the intended design pressure and temperatures.

operating pressure: the pressure at which the PVHO and its subsystems are designed to operate. This shall not exceed the maximum allowable working pressure (as defined in the current edition of ASME BPVC and ASME B31.1) of the PVHO or any of its subsystems. The operating pressure is usually kept at a suitable level below the setting of the pressure relief device(s) to prevent its frequent opening.

operational temperature range: the range of ambient temperatures to which the chamber can be subjected while pressurized.

oxygen service (piping): any portion of a piping system internally pressurized with a gas containing more than 25% oxygen by volume.

payload: the weight the submersible PVHO is capable of carrying in addition to its permanently fitted equipment.

permissible exposure limit (PEL): nomenclature used by the Occupational Safety and Health Administration (OSHA) to express allowable airborne concentration for a conventional 8-hr workday and a 40-hr workweek.

pilot: a person appointed and trained to command a submersible PVHO.

pipe: a tube with a circular cross section conforming to the dimensional requirements for nominal pipe size as tabulated in ASME B36.10M, Table 1 and ASME B36.19M, Table 1. For special pipe having a diameter not listed in these tables, and also for round tube, the nominal diameter corresponds with the outside diameter. The fundamental difference between pipe and tube is the dimensional standard to which each is manufactured.

piping: refers to all circular cross-section conduits and is used generically to include both pipe and tube used for the transmission of fluids. The use of noncircular tubing for pressure piping within the scope of this Standard is not permitted.

piping system: the assembly of piping and components required to form a functional system.

ppm: concentration in air expressed as parts per million, on a volumetric basis.

pressure control valve: a valve used to reduce or maintain the pressure in a piping system by admitting or releasing fluid pressure, as required, to maintain pressure at or near a designated setpoint. Other commonly used terms include pressure-reducing valve, pressure regulator, and back-pressure regulator.

pressure testing certification (window): certification that the newly manufactured window has successfully met the mandatory requirements of PVHO-1.

pressure testing laboratory (window): the party who pressure tests windows installed in viewport flanges and provides pressure testing certification.

pressure vessel for human occupancy (PVHO): a chamber that encloses a human being within its pressure boundary while it is under internal or external pressure.

Professional Engineer: an individual who has fulfilled education, experience, and testing requirements that, under applicable jurisdictional engineering licensure or chartering laws, permit him/her to have technical authority according to the jurisdiction.

PVHO manufacturer: person, group, or corporate entity that constructs or assembles a pressure vessel for human occupancy in accordance with the provisions of ASME PVHO-1 and the User's Design Specification.

qualified person: someone who, by possession of a recognized degree, certificate, or professional standing, or who, by knowledge, training, and experience, has successfully demonstrated the ability to perform the assigned duties.

ASMENORMDOC.COM : Click to view the full PDF of ASME PVHO-1 2019

quality assurance program: documented systematic organization of policies and procedures to ensure that the product or service delivered meets all customer and design specifications.

rated depth: the maximum depth to which the submersible craft is certified to operate.

risk: the combination of the probability of occurrence of harm and the severity of that harm.

risk analysis: the systematic use of available information to identify hazards and to eliminate the risk.

saturation diving: a diving procedure by which the diver is continuously subjected to a pressure greater than atmospheric so that his/her body tissue and blood become saturated with the inert element of the breathing gas at the elevated ambient pressure.

scratch (window): a crack-free discontinuity on the surface of the acrylic window that is the result of foreign objects coming in contact with the acrylic surface. For the purpose of evaluation, gouges and dings shall be considered scratches. The dimension of a scratch is the depth of the sharp surface discontinuity measured from the window surface to the bottom of the scratch.

service life (window): the period of time and/or number of cycles that a window may be permitted to remain in service. The window service life may be shorter or longer than the window design life due to variations in the conditions of service, latent manufacturing defects, or other factors. (For additional information regarding the service life of windows, see ASME PVHO-2.)

service locks (other than human occupancy): compartments for transferring supplies and materials into and out of a PVHO while the occupants remain under pressure.

shall: shall or *shall not* is used to indicate that a provision is mandatory.

sheet castings: sheets of plastic cast on a production line basis and carried as a standard production item in a manufacturer's sales catalog.

short-term critical pressure (STCP) (window): the pressure required to catastrophically fail a window at a 650-psi/min (4.5-MPa/min) rate in design temperature ambient environment.

short-term proof pressure (STPP): the pressure that a window shall withstand without catastrophic failure under short-term pressurization at 650 psi/min (4.5 MPa/min) in design temperature ambient environment. This Standard defines short-term proof pressure as equal to 4 times the design pressure.

should: should or *it is recommended* is used to indicate that a provision is not mandatory but is recommended as good practice.

significant dimension (window): when the dimension of an inclusion or a scratch exceeds a specified value and is considered as being present in the window for inspection purposes.

soft goods: O-rings, gaskets, seals, and other polymer or elastomer components used in a PVHO system.

spherical sector window: a geometry that depicts a spherical window shape.

standard temperature: the range of material temperatures from 70°F to 75°F (21°C to 24°C) at which all the dimensions in this Standard are specified.

standard window geometry: proven window geometry that, because of its safe service record, has been incorporated in this Standard. Windows with standard geometries may be used in pressure vessels for human occupancy without having to undergo experimental design qualification.

submersible: a manned, self-contained, mobile vessel that primarily operates under water and relies on surface support (e.g., a surface ship or shore-based facilities) for monitoring and for one or more of the following:

(a) recharging of power supply
(b) recharging high-pressure air
(c) recharging life support

submersible diving chamber (SDC): commonly called a diving bell; used to transport divers under pressure to a work site.

supplier (windows): the party who supplies finished windows with all required certifications to the chamber manufacturer (original equipment) or user (replacement). There is nothing in this Standard prohibiting the supplier from performing the functions of plastic manufacturer, material testing laboratory, window designer, window fabricator, and pressure testing laboratory, provided that these functions generate the required certifications.

support facility: a surface craft or shore-based facility providing support to the submersible PVHO.

systems integrator: a person, company, or manufacturer that brings together component subsystems and ensures that the overall system and all of its subsystems function safely together.

testing: within this Standard, testing generally refers to either pressure testing, whether performed hydrostatically, pneumatically, or a combination hydrostatic pneumatic, or mechanical testing to determine such data as material hardness, strength, and notch toughness. Testing, however, does not refer to NDE using methods such as liquid penetrant or radiography. See *examination*.

thickness of a vessel wall:

design thickness: the sum of the required thickness and the corrosion allowance.

ASMENORMDOC.COM : Click to view the full PDF of ASME PVHO-1 2019

nominal thickness: the thickness selected as commercially available and supplied to the manufacturer. For plate material used in formed shapes, the nominal thickness shall be, at the manufacturer's option, either the thickness shown on the Material Test Report before forming or the thickness of the plate at the joint or location under consideration.

required thickness: that thickness computed from the maximum design pressure and other loading criteria prior to the corrosion allowance being applied.

third-party inspection agency: an individual or organization, independent of the designer, fabricator, and user, who is qualified through education, test, or experience to perform the inspection.

threshold limit values (TLV): nomenclature used by the American Conference of Governmental Industrial Hygienists (ACGIH) to express allowable airborne concentration for a conventional 8-hr workday and a 40-hr workweek.

total hydrocarbon analyzer: any suitable process analyzer employing a hydrogen flame ionization detector (FID) having a range of 0 mg/m^3 to at least 1 000 mg/m^3 methane equivalents.

trunk/tunnel: any void that creates a volume between two or more doors or hatches is considered to be either a trunk or a tunnel.

tube: a hollow product of circular or any other cross section having a continuous periphery. Circular tube size may be specified with respect to any two, but not all three, of the following: outside diameter, inside diameter, and wall thickness; types K, L, and M copper tube may also be specified by nominal size and type only. Dimensions and permissible variations (tolerances) are specified in the appropriate ASTM or ASME standard specifications.

tube or pipe fitting, bite-type fitting: any tube fitting that grips the tube by means of one or more teeth that bite or dig into the outside diameter of the tube creating a definite notch.

viewport (window): a penetration in the pressure vessel including the window, flange, retaining rings, and seals.

void (window): hollow cavity in the body of the acrylic casting.

welded fitting: any tube or pipe fitting that is attached to the tube or pipe by means of a welding process.

window: a transparent, impermeable, and pressure-resistant insert in the viewport.

window fabricator: person, group, or corporate entity that fabricates PVHO windows in accordance with the requirements of ASME PVHO-1 and the User's Design Specification.

ASMENORMDOC.COM : Click to view the full PDF of ASME PVHO-1 2019

NONMANDATORY APPENDIX A
DESIGN OF SUPPORTS AND LIFTING ATTACHMENTS

The designer should consider using the provisions of the following studies, which appear in *Pressure Vessels and Piping: Design and Analysis, Volume Two — Components and Structural Dynamics*, The American Society of Mechanical Engineers, New York, 1972:

(a) "Local Stresses in Spherical and Cylindrical Shells due to External Loadings," K. R. Wichman, A. G. Hopper, and J. L. Mershon, reprinted from Welding Research Council Bulletin 107, 1965.

(b) "Stresses in Large Horizontal Cylindrical Pressure Vessels on Two Saddle Supports," L. P. Zick, reprinted from Welding Journal Research Supplement, 1971.

The use of these provisions shall not negate Code requirements.

ASMENORMDOC.COM : Click to view the full PDF of ASME PVHO-1 2019

NONMANDATORY APPENDIX B RECOMMENDATIONS FOR THE DESIGN OF THROUGH-PRESSURE BOUNDARY PENETRATIONS

B-1 GENERAL

This Appendix provides several basic designs of through-pressure boundary piping penetration designs that have been found to give good service. Acceptable designs of through-pressure boundary piping systems are not necessarily limited to the designs shown. All pressure boundary penetrations shall meet the reinforcement and weld detail requirements of ASME PVHO-1 and ASME BPVC, Section VIII, Division 1 or Division 2, as appropriate.

B-2 PENETRATOR DESIGNS

Figure B-2-1 shows four basic penetrator designs intended principally for services as follows:

(a) full coupling intended for standard threaded pipe couplings or a special coupling dictated by the User's Design Specification. For most applications, a standard 6,000-psi NPT coupling is acceptable in 316 or 316L stainless steel.

(b) half-coupling, full-penetration weld installation. This is generally used for pressure equalization in supply locks and transfer tunnels and can also be used for pressure gauge penetrators.

(c) special forging. This category is intended for fully radiographable penetrators, generally to comply with ASME BPVC, Section VIII, Division 2.

(d) flush-mount coupling. This category is generally a 6,000-psi or special forging type coupling. This configuration is used where a full coupling with internal and external threads is required, or where there are chamber drains and supply lock and tunnel equalizations, or in other applications where a flush internal mount is required.

B-3 COUPLING DETAILS

Figure B-3-1 shows four acceptable coupling details.

B-3.1 Threaded Couplings

(a) NPT (National Pipe Thread) 6,000-psi Coupling. For marine systems the coupling material should be a stainless steel per para. B-4. The heavy wall of the 6,000-psi coupling normally permits at least one field rethreading should the original threads be damaged.

(b) Special Coupling With an SAE or MS (Military Standard) Straight Thread O-Ring Boss. This design is recommended over pipe threads when the contained fluid may be helium.

B-3.2 Threaded Insert Couplings

These are generally smooth bore couplings with threaded, flanged inserts with either pipe threads or straight thread O-ring seals. This installation can be sealed and secured with a fillet weld or assembled with a flat washer and locking nut with O-ring seals as shown. The latter installation is preferred but its cost often makes it impractical.

B-4 MATERIALS

Practical experience has shown that unthreaded (i.e., smooth bore) couplings in marine systems may be any Code-approved forged steel while threaded couplings and inserts should be of approved stainless steel (316 or 316L), brass, or bronze. Corrosion-resistant alloys are strongly recommended to eliminate cleaning, maintenance, and material compatibility problems. Threaded couplings and inserts in land-based chambers may be of any Code-approved material.

ASMENORMDOC.COM : Click to view the full PDF of ASME PVHO-1 2019

Figure B-2-1 Acceptable Weld Nozzle Penetrators

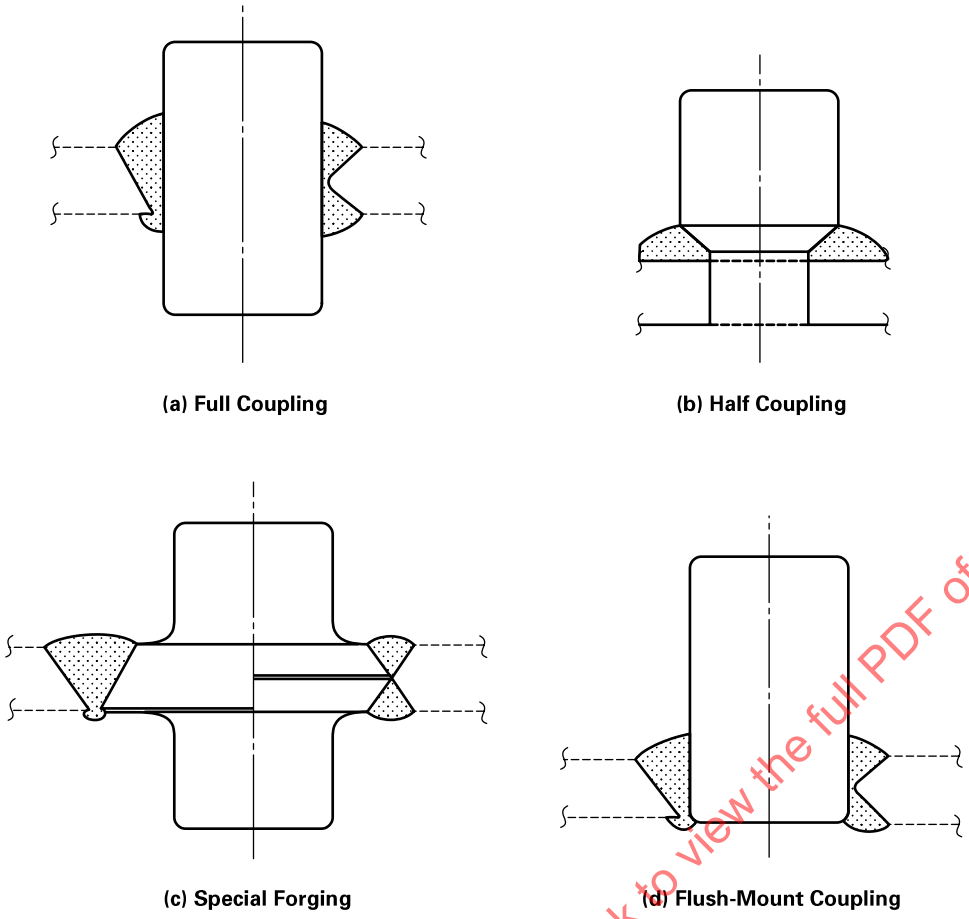

GENERAL NOTE: This figure refers to pipes 2 in. (50 mm) and under.

ASMENORMDOC.COM : Click to view the full PDF of ASME PVHO-1 2019

Figure B-3-1 Acceptable Threads and Inserts

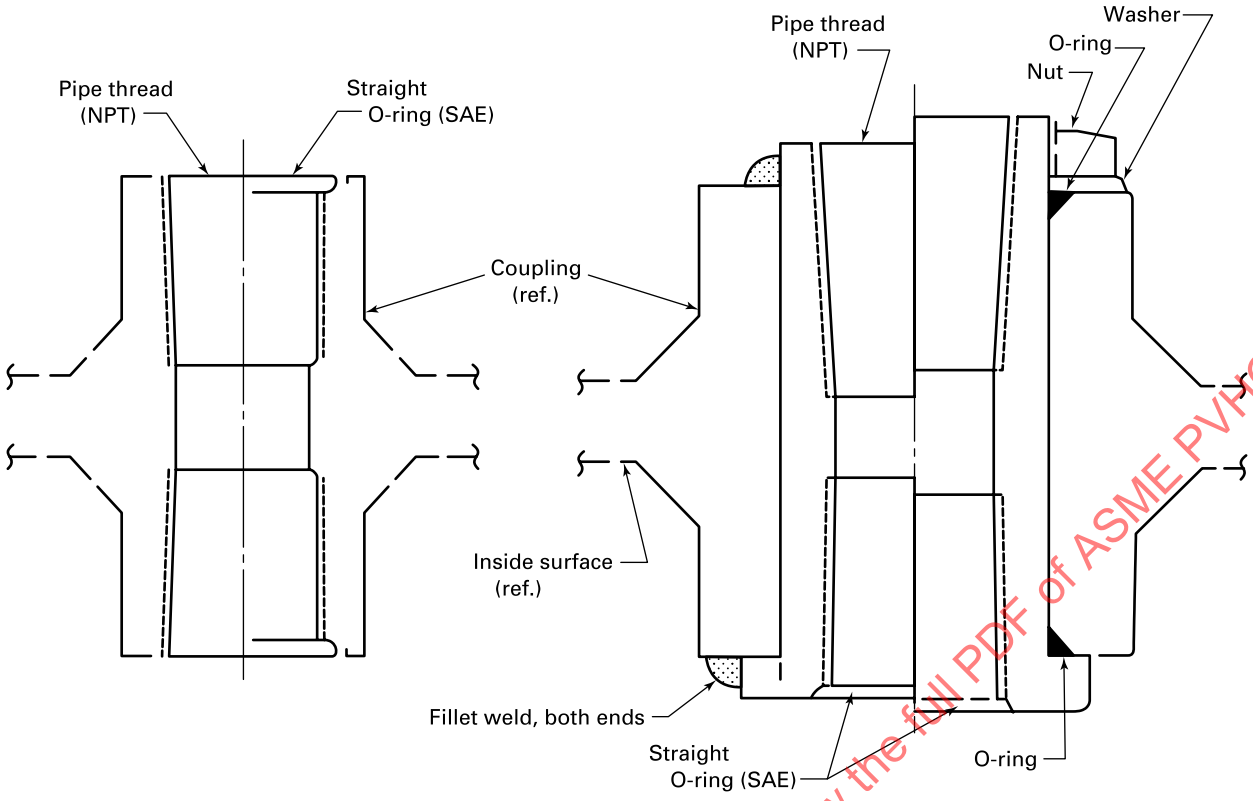

(a) Threaded Couplings

(b) Threaded Insert Couplings

ASMENORMDOC.COM : Click to view the full PDF of ASME PVHO-1 2019

NONMANDATORY APPENDIX C RECOMMENDED PRACTICES FOR COLOR CODING AND LABELING

All piping and gas storage bottles should be colored and labeled to indicate content, maximum allowable working pressure, and direction of flow. Except for certain pipe materials such as stainless steel, the color should be a continuous coat of paint. For stainless steel and similar corrosion-resistant materials, color coding may be a 1-in. (25-mm) band of paint or tape. Bands should be applied at every bend and intersection, and at each side of obstructions. To aid in tracing the pipe, a minimum of three bands should be visible at any location.

In addition to color coding, piping should be labeled with the name and/or symbol of its contents, direction of flow, and maximum allowable working pressure. This labeling should be applied at every intersection and at each side of obstructions. For labeling, a color that contrasts with that of the pipe should be used. Tables C-1 and C-2 give the color codes required by the U.S. Navy and the International Maritime Organization (IMO), respectively. Other color codes may also be used.

Table C-1 U.S. Navy Color Codes

Name	Designation	Color
Oxygen	O_2	Green
Nitrogen	N	Light gray
Air (low pressure)	ALP	Black
Air (high pressure)	AHP	Black
Helium	He	Buff
Helium-oxygen mix	He-O_2	Buff and green

GENERAL NOTE: Adapted from *U.S. Navy Diving Manual NAVSHIPS 0994-001-9010*.

Table C-2 IMO Color Codes

Name	Symbol	Color
Oxygen	O_2	White
Nitrogen	N_2	Black
Air	Air	White and black
Carbon dioxide	CO_2	Gray
Helium	He	Brown
Oxygen-helium mix	O_2-He	White and brown

GENERAL NOTE: Adapted from *IMO Resolution A536*, "Code of Safety for Diving Systems."

ASMENORMDOC.COM : Click to view the full PDF of ASME PVHO-1 2019

NONMANDATORY APPENDIX D GUIDELINES FOR THE SUBMISSION OF A CASE FOR THE USE OF NONSTANDARD DESIGNS, MATERIALS, AND CONSTRUCTION FOR NON-FLEXIBLE PVHO CHAMBER FABRICATION (19)

PVHO chambers using nonstandard materials, design, and/or construction techniques may be constructed under the requirements of ASME PVHO-1 if a Case describing all exceptions and additions to ASME PVHO-1 has been reviewed and approved by the PVHO Consensus Committee (hereinafter referred to as the Committee) in accordance with Committee Procedures. The following provides a general outline of the information and format that should be included in the proposed Case inquiry (hereinafter referred to as the Case).

The issuance of a PVHO Case should not be construed as approval of a specific design. It is the intent of the Committee to provide performance-based criteria that are applicable to similar nonstandard features. The Case method permits the Committee to assess the inherent safety of the nonstandard feature prior to adoption into PVHO-1. It is the Committee's objective to ensure that a nonstandard PVHO provides equivalent safety as a standard PVHO.

D-1 INTRODUCTION

The intention of a Case is to ensure that alternative approaches are implemented with design margins and quality assurance commensurate with those set forth for recognized materials and established geometry. Minor changes to the requirements in ASME PVHO-1 may not require the extensive analysis and testing described below. Radically different designs may require additional considerations. For this reason, the applicant is cautioned not to fabricate and test a PVHO in accordance with these guidelines and then submit the results with a request for review. Rather, submittal of the Case in the format recommended provides a baseline for the Committee to make an initial assessment of the inherent technical merit and, if warranted, offer appropriate recommendations regarding revision. Should the applicant wish to conduct testing prior to submitting a Case, the Committee reserves the right to require additional tests.

Once a Case is published, it may then be used in accordance with the provisions and limitations defined in the Case.

A Case is normally issued for a limited period of time, after which it may be reaffirmed, incorporated into the Standard, revised, or allowed to expire. The Committee may also act to revoke a Case prior to its normally scheduled expiration, if deemed necessary.

D-2 GENERAL (19)

The formal written inquiry to the Committee should provide background information describing the new or novel design and/or material being proposed for consideration. An explanation of what is being proposed, why this proposal is being presented for consideration, and how the new design and/or material is to be used should be provided.

All proposed PVHO Cases, including proposed reaffirmations of existing PVHO Cases, must be prepared in accordance with the latest published edition of the relevant PVHO standard, which must be noted in the Case itself.

The applicant should clearly and concisely present all exceptions to ASME PVHO-1 that are being sought. Requirements in addition to those in ASME PVHO-1 that are proposed to ensure that the nonstandard PVHO provides equivalent safety to a standard PVHO should also be stated.

The following information shall be provided:

(a) the maximum allowable working pressure (MAWP)

(b) a description of the configuration, shape, and dimensions of the vessel complete with enclosures, windows, etc.

(c) the maximum number of occupants

(d) the design temperature limits

(e) the design life expectancy of the vessel, yr

(f) the design number of pressure cycles

When an existing PVHO Case is being proposed for reaffirmation, documentation shall be provided identifying any and all changes made since the edition to which it

ASMENORMDOC.COM : Click to view the full PDF of ASME PVHO-1 2019